Industrial PC

EPC/PPC-A7-070HB-C

PN: CS10600U070

Content can change at anytime, check our website for latest information of this product.
www.chipsee.com

Contents

EPC/PPC-A7-070HB-C 3

1. Product Overview 7

2. Ordering Options 8

2.1. Operating System 8

2.2. Optional Features 9

3. Hardware Features 10

4. Power Input 12

5. Touch Screen 13

6. Connectivity 14

6.1. RS232/RS485/CAN 14

6.2. USB HOST Connectors 16

6.3. LAN Connectors 17

6.4. WiFi & BT Module 18

6.5. GPIO 19

7. TF Card Slot 22

8. Audio Connectors 23

9. Boot DIP Switch 24

10. 3D Model 25

11. Disclaimer 26

12. Technical Support 26

EPC/PPC-A7-070HB-C

Front View

Rear View

LAN
HOST
+24V
GND
OUT1
OUT2
OUT3
OUT4
IN1
IN2
IN3
IN4
CAN2_H
CAN2_L
CAN1_H
CAN1_L
RS485_5-
RS485_5+
RS485_4-
RS485_4+
RS485_3-
RS485_3+
RS232_2_RXD
RS232_2_TXD
RS232_1_RXD
RS232_1_TXD
GND
+5V
DC:6-36V
G
-
+

Front View (Embedded Variant)

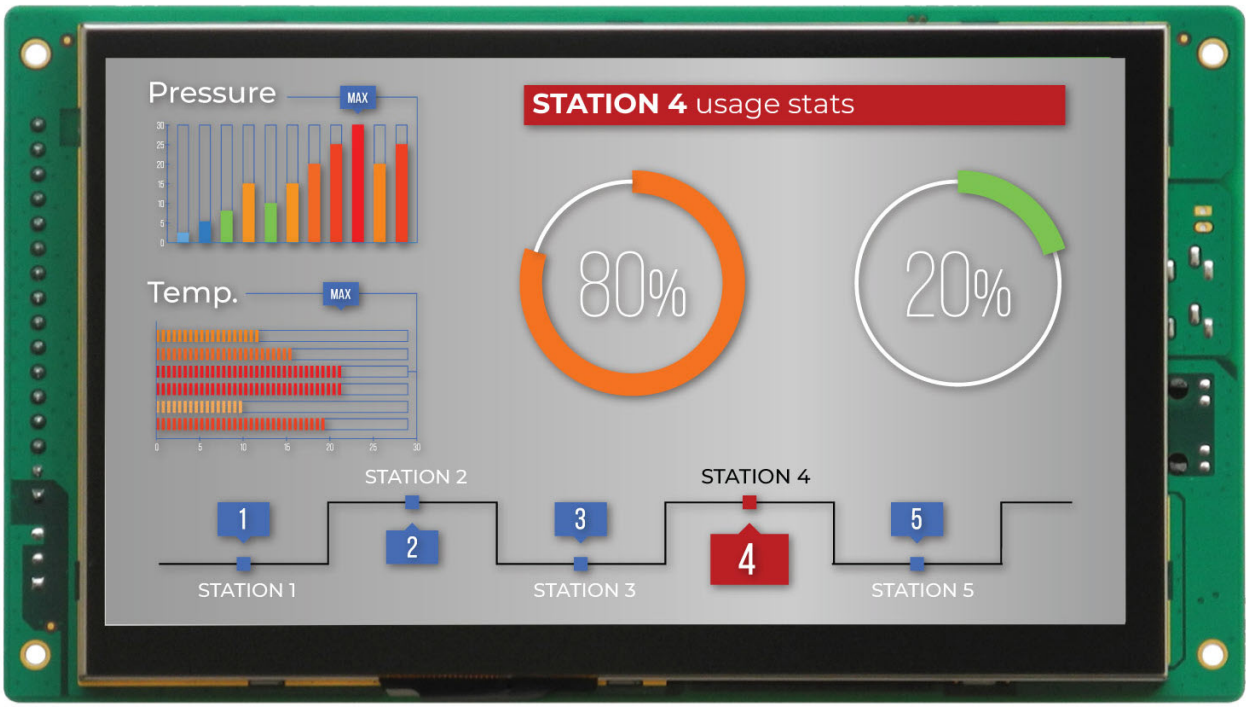

Rear View (Embedded Variant)

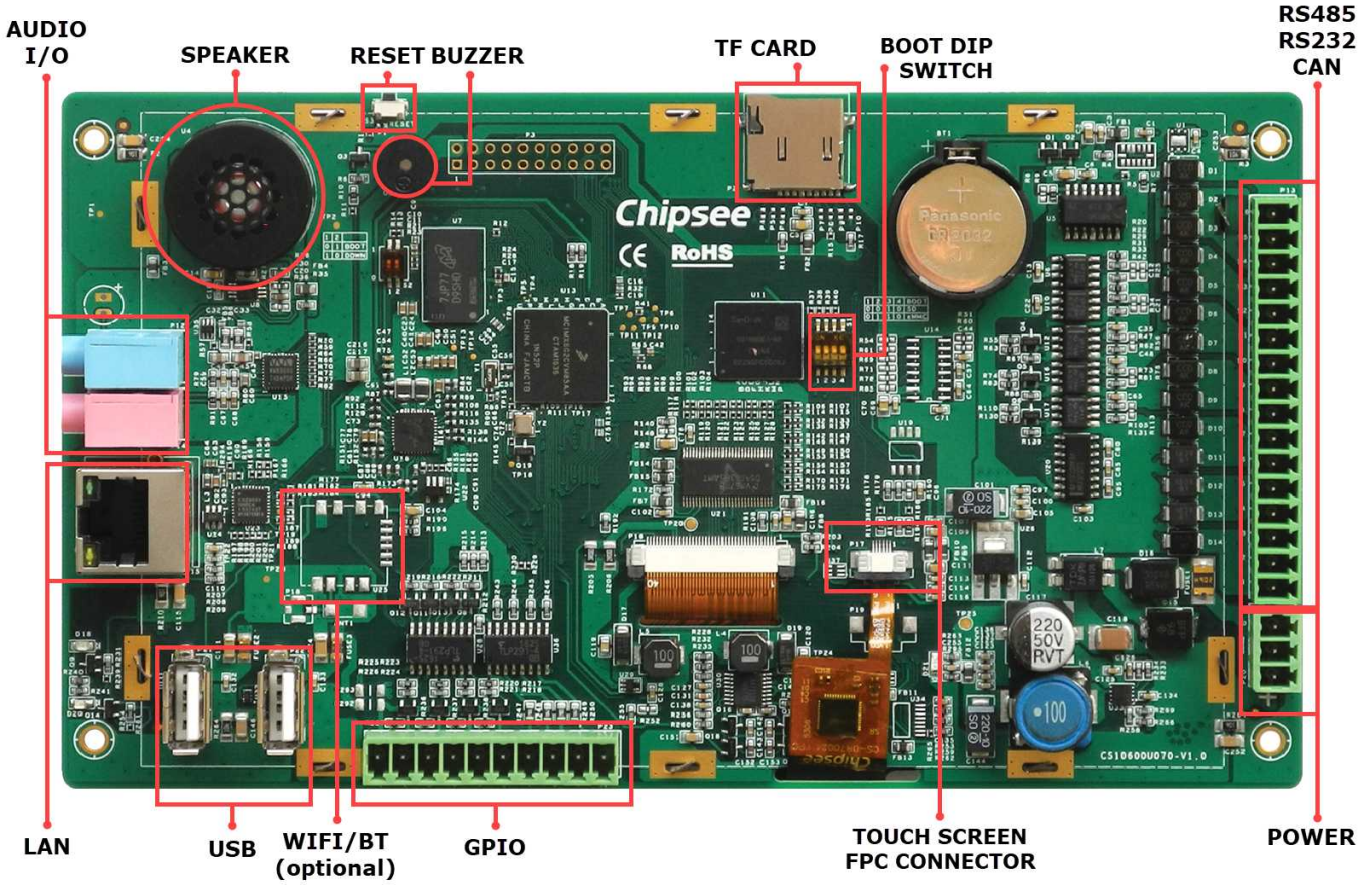

Product Overview

The Cortex®-A7 series EPC/PPC-A7-070HB-C (PN: CS10600U070) is a rugged, high-quality industrial panel PC. This single board computer features a 7.0” multi-point capacitive touch screen with a resolution of 1024 x 600 pixels.

Key Applications

- Human Machine Interface HMI
- Process Control
- Process Monitoring
- HMI
- IIoT node
- Environmental Monitoring
- PLC
- Automotive applications
- ATM...

It is available both as an embedded solution and as a device hosed in an aluminum casing with bezels, thus facilitating different installation options:

- Installation on an industrial cabinet
- Integration with the existing equipment

The EPC/PPC-A7-070HB-C Industrial Panel PC offers a very low power consumption, despite its high-speed processing capabilities. It is powered by the i.MX6UL Arm® Cortex®-A7, an ultra-low power Application Processor Unit (APU) from NXP, running at up to 528 MHz.

This product also features a broad range of connectivity options, providing a high level of scalability for various use cases. It is the perfect solution for power-constrained applications on the Edge, acting as a robust control unit for collecting, processing, and aggregating field data. The i.MX6Q APU is part of NXP’s EdgeVerse™ edge computing platform.

The NXP i.MX6UL APU does not generate extensive heat, so even the thin aluminum housing on PPC version delivers sufficient thermal dissipation. With its junction temperature from -20 to +140°C, the APU itself is well suited for extended temperature range in both automotive and factory environments.

Ordering Options

Chipsee products can be customized during the ordering process. The product will be shipped with the pre-installed factory defaults if no extra requirements are specified. The table in the Hardware Features section provides information about the default options bundled with the product.

> **Note**
>
> You can order EPC/PPC-A7-070HB-C from the official Chipsee Store or from your nearest distributor.

Operating System

This product comes with a pre-installed OS of your choice. It supports Linux Qt5.5 and Debian 8.10, which can be obtained from the Software Documentation section, along with the detailed installation instructions.

> **Warning**
>
> The Software Documentation provides a detailed instruction how to install different OS on your own. However, bear in mind that Chipsee cannot take the responsibility of inadequate installation procedure. If you “brick” your device, please contact Chipsee Technical Support at **support@chipsee.com** and ask for help

Optional Features

By default The EPC/PPC-A7-070HB-C Industrial Panel PC does not include 3G/4G module. However, the Wi-Fi/BT module is optional and can be pre-installed during the ordering process, as per request. Note that enclosed version of the A7-70HB-C (PPC-A7-70HB) comes with a specially designed hole for mounting a standard (SMA) WiFi antenna connector.

> **Warning**
>
> Installation, repair, and maintenance tasks should be performed by trained personnel only.
> Chipsee does not bear any responsibility for damage caused by inadequate handling of the product.

Hardware Features

The EPC/PPC-A7-070HB-C Industrial Panel PC offers a board range of performance and connectivity options for scalable integration, providing expandability according to future needs. Some of the key features are listed in the table below.

EPC/PPC-A7-070HB-C	
CPU	i.MX6UL, Arm® Cortex®-A7, 528MHz
RAM	512MB DDR3
eMMC	4GB
Storage	TF card supports up to 32GB SDHC
Display	7.0” LCD, 1024 x 600 , High Brightness: 500cd/m^2
Touch	Capacitive Touch (Five-Point)
USB	2 x USB 2.0 Host
LAN	1 x RJ45, up to 100Mbps
Audio	3.5mm Audio In/Out Connectors, Internal 2W Speaker
Buzzer	Yes
RTC	Yes, Powered by CR2032 Button Battery
RS232	2 x RS232
RS485	3 x RS485
CAN	2 x CAN
GPIO	4 x Input, 4 x Output, PSU, Isolated
WiFi/BT	Optional On-Board WiFi (RTL8723)
Power Input	From 6V to 36V
Current at 12V	500mA Max
Power Consumption	5W Typical
Working Temperature	-20°C to +70°C
OS	Linux, Debian
Dimensions	EPC-A7-070HB-C (CS10600U070E): 190 x 112 x 28mm
	PPC-A7-070HB-C (CS10600U070P): 205 x 135 x 28mm
Weight	EPC-A7-070HB-C (CS10600U070E): 340g
	PPC-A7-070HB-C (CS10600U070P): 730g
Mounting	EPC-A7-070HB-C (CS10600U070E): Embedded
	PPC-A7-070HB-C (CS10600U070P): Panel

Table 68 Key Features

1 This product has 5 x UART channels in total. The default configuration is 2 x RS232, 3 x RS485. UART can be swapped between RS232 and RS485 modes easily, so if you need different RS232/RS485 configuration, please get in touch with the Chipsee Technical Support at **support@chipsee.com**

Power Input

The EPC/PPC-A7-070HB-C Industrial Panel PC can be powered by a wide range of input voltages: from 6 to 36V DC. The power input connector is a **3-pin, 3.81mm terminal**. The polarity and the pinout is clearly marked on the housing of the PPC version, as well as on the PCB itself of the EPC version, as shown in *Figure 1*.

Figure 331: *Figure 1: Power Input Section (embedded/enclosed version)*

Note that the "**+**" sign represents the positive power input, and it is printed both at the casing and as a silk-screen on a PCB of the embedded version. The "**-**" terminal is shorted to the ground.

Power Input Definition		
Pin Number	**Definition**	**Description**
Pin 1	Positive Input	DC Power **Positive Terminal**
Pin 2	Negative Input	DC Power **Negative Terminal**
Pin 3	Ground	**Power System Ground**

Table 69 Table 1: Power Connector

Note

The system ground "**G**" is not connected to power negative "**-**" on board, we connect "**-**" and "**G**" by using one 10MR resistor and one 1000pF capacitor.

Touch Screen

The EPC/PPC-A7-070HB-C Industrial Panel PC uses a five-point multitouch capacitive screen. *Figure 2* shows the capacitive screen connected to the motherboard via the **FPC connector**.

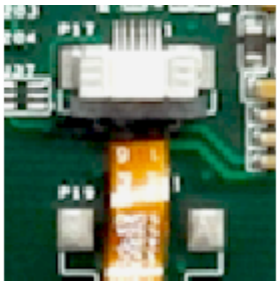

Figure 332: *Figure 2: Capacitive Screen Connector*

Attention

A capacitive touch screen is susceptible to power noise and Electromagnetic Radiation (EMR). It may cause LCD ripples or even capacitive touch malfunction. If using a capacitive multitouch test application, you might notice the touch points float erratically across the display. There are several solutions to this problem:

1. Use a high-quality Power Adapter Unit (PSU) with low EMR. You can also provide power from a battery.
2. Make sure that the EPC/PPC-A7-070HB-C Power Input connector (pin 3) is properly connected to the Power System Ground to provide sufficient EMI shielding and eliminate the problem entirely.
3. Bad GND problem can also be confirmed by touching pin 3 of the Power Input connector with one hand while operating the capacitive touch screen with the other hand. In this case, the operator's body acts as the Power System Ground.

Connectivity

There are many connectivity options available on the EPC/PPC-A7-070HB-C industrial PC. It has 2 x HOST USB Type A connectors, 1 x network connector (RJ45) supporting up to 100 Mbps, and 5 x UART terminals (RS232/485). This device also features two CAN interfaces, and a set of opto-isolated GPIO pins for various purposes.

RS232/RS485/CAN

The serial communication interfaces (RS485, RS232, and CAN) are routed to a **16-pin 3.81mm terminal**, as illustrated on *Figure 3*. Serial communication on both RS485 and RS232 interfaces can reach up to 115200 kbps.

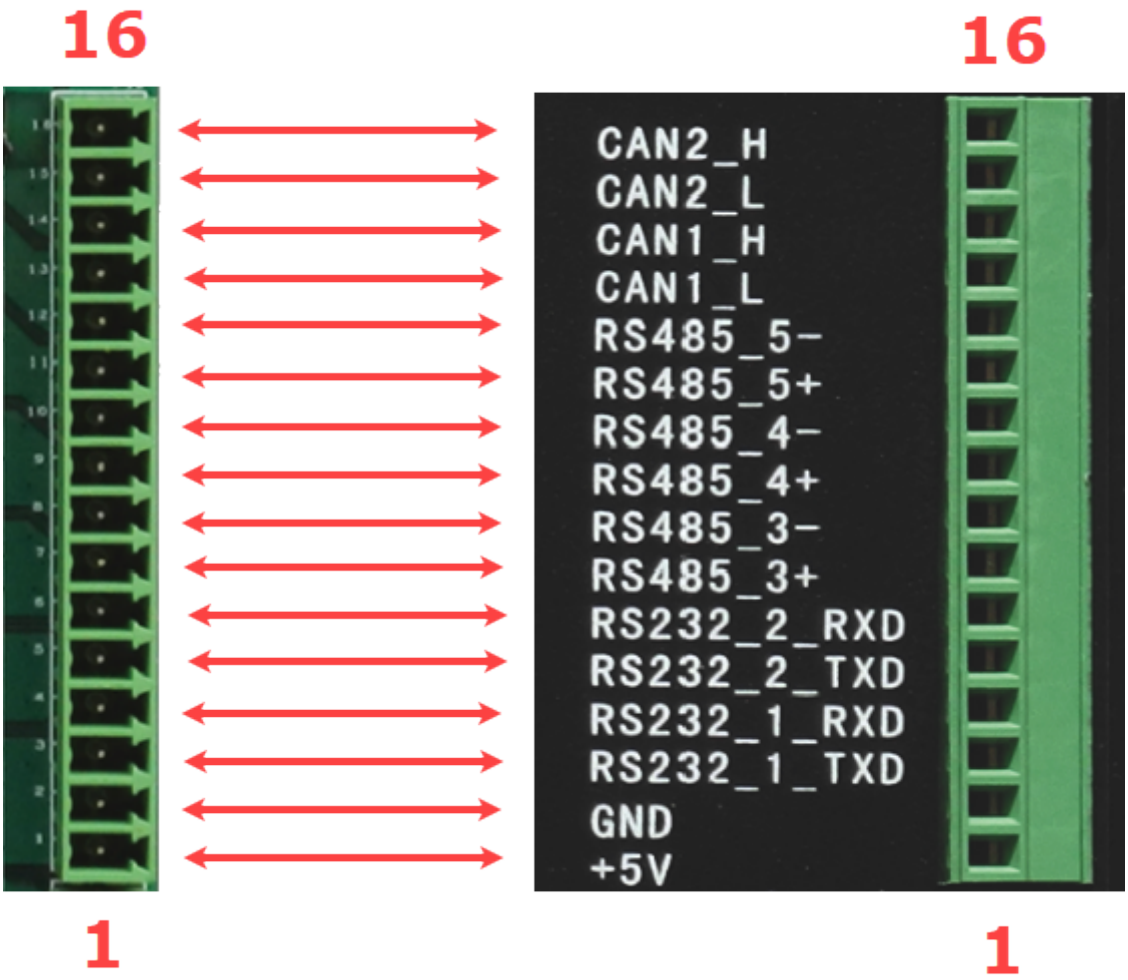

Figure 333: *Figure 3: Relation between serial pins on embedded vs. enclosed version of the A7-70HB-C IPC*

The table below offers more detailed description of every pin and its definition:

RS232 / RS485 / CAN Pin Definition:		
Pin Number	**Definition**	**Description**
Pin 16	CAN2_H	CPU CAN Channel 2 H signal

RS232 / RS485 / CAN Pin Definition:		
Pin 15	CAN2_L	CPU CAN Channel 2 L signal
Pin 14	CAN1_H	CPU CAN Channel 1 H signal
Pin 13	CAN1_L	CPU CAN Channel 1 L signal
Pin 12	RS485_5-	CPU UART5, RS485 –(B) signal
Pin 11	RS485_5+	CPU UART5, RS485 +(A) signal
Pin 10	RS485_4-	CPU UART4, RS485 –(B) signal
Pin 9	RS485_4+	CPU UART4, RS485 +(A) signal
Pin 8	RS485_3-	CPU UART3, RS485 –(B) signal
Pin 7	RS485_3+	CPU UART3, RS485 +(A) signal
Pin 6	RS232_2_RXD	CPU UART2, RS232 RXD signal
Pin 5	RS232_2_TXD	CPU UART2, RS232 TXD signal
Pin 4	RS232_1_RXD	CPU UART1, RS232 RXD signal
Pin 3	RS232_1_TXD	CPU UART1, RS232 TXD signal
Pin 2	GND	System Ground
Pin 1	+5V	System Power Output 5V, up to 1A

Table 70 Table 2: Connectivity Section

Note

120Ω termination resistors are mounted on the device default, if you don't need it, contact us before order.

USB HOST Connectors

There are 2 x Type A **USB HOST connectors** onboard, as shown on *Figure 4*.

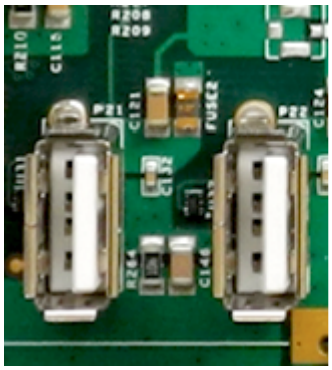

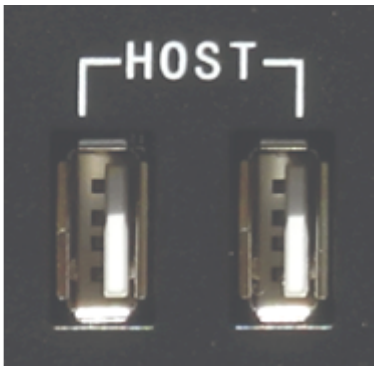

Figure 334: *Figure 4: USB Connectors (embedded/enclosed PC version)*

Warning

Be careful not to touch surrounding electronic components accidentally while plugging in USB devices into the embedded IPC version.

LAN Connectors

LAN (RJ45) connector provides Ethernet connectivity over standardized Ethernet cables *(Figure 4)*. The integrated Ethernet interface supports up to 100 Mbps data throughput. Power over Ethernet (PoE) is not supported.

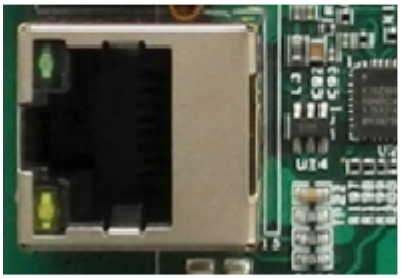

Figure 335: *Figure 5: RJ45 LAN Connectors (embedded/enclosed PC version)*

WiFi & BT Module

The EPC/PPC-A7-070HB-C Industrial Panel PC does not include an embedded WiFi/BT module. However, it has an onboard footprint accommodating for easy installation of the popular **Realtek RTL8723 WiFi/BT module** that supports BT/BLE 4.0 (with backward compatibility), as well as 802.11bgn 2.4 GHz Wireless LAN (WLAN).

Figure 336: *RTL8273 WiFi/BT Module PCB Footprint*

The enclosed (PPC) variant of the product has a specially designed connector hole for a standard SMA connector, allowing an external WiFi antenna to be connected.

GPIO

The EPC/PPC-A7-070HB-C Industrial Panel PC features a **10-pin 3.81 mm terminal** that provides 8 x opto-isolated GPIO pins, of which 4 x are output, and 4 x are input pins. The 10-pin terminal also includes an isolated PSU input in the range of 5 to 24 VDC. The exact pinout is given in the table below.

The GPIO **HIGH** output level corresponds to the voltage connected at the Isolated Power Input, while the GPIO **LOW** output level corresponds to the isolated Ground Input. Each GPIO output can drive loads up to 500mA, enough to drive various applications directly, such as relays or solenoid valves.

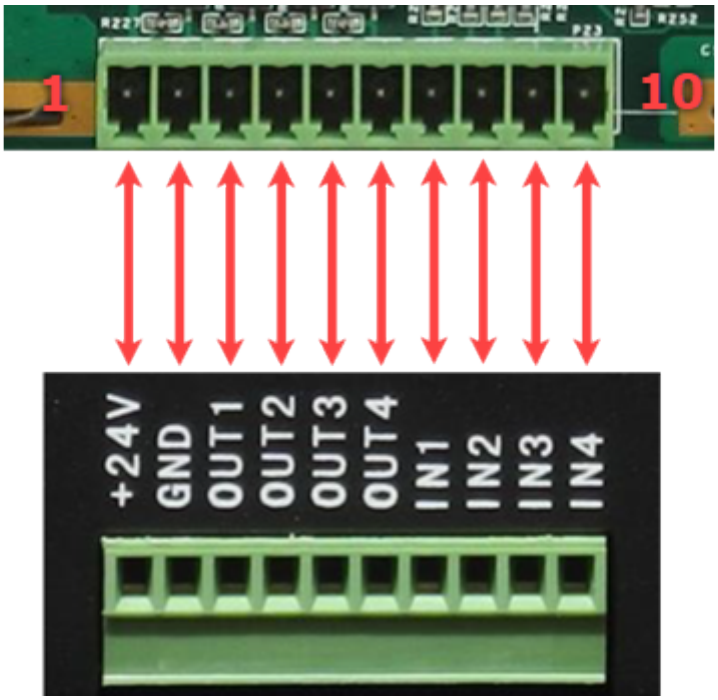

Figure 337: *Figure 7: GPIO Terminal (embedded/enclosed PC version)*

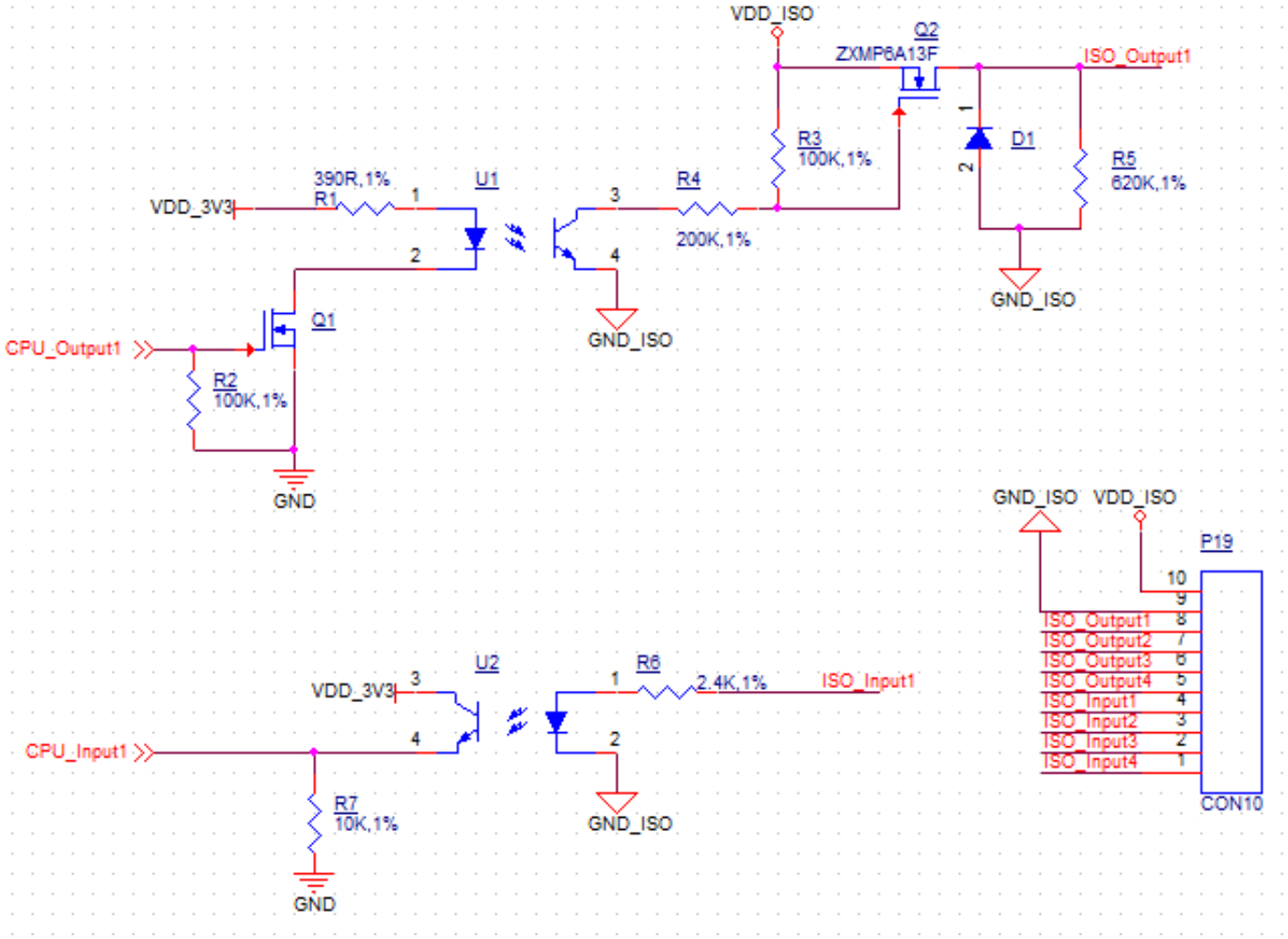

Isolated GPIO reduced schematic

GPIO Pin Definition:	
Pin Number	**Definition**
Pin 1	Isolated Power Input2
Pin 2	Isolated Ground Input
Pin 3	OUT1
Pin 4	OUT2
Pin 5	OUT3
Pin 6	OUT4
Pin 7	IN1
Pin 8	IN2
Pin 9	IN3
Pin 10	IN4

Table 71 GPIO Pinout

2

If the isolation is not a requirement, it is possible to use a non-isolated PSU instead.
The GPIO uses the 24V Logic by default.
It is also possible to use the onboard 5V power supply: it can be re-routed to the *Isolated Power Input* pin by populating R292 and R293 PCB footprints with 0Ω resistors.
Note that in this case, the *Isolated Power Input* pin will become an output for the onboard 5V power supply.

TF Card Slot

The EPC/PPC-A7-070HB-C Industrial Panel PC features 1 x **TF Card (micro SD) slot** as illustrated in *Figure 8*. It can address up to 32GB of memory.

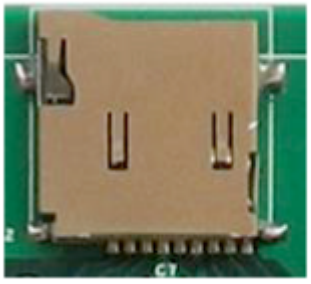

Figure 338: *Figure 8: TF (micro SD) Card Slot*

> **Note**
>
> The product does not come shipped with the TF Card by default.

Audio Connectors

The EPC/PPC-A7-070HB-C Industrial Panel PC features some audio peripherals, as well. It has 1 x **3.5mm audio input jack** and 1 x **3.5mm audio output jack**.

On the embedded panel PC version, the pink connector is the audio input jack (line-in) and the blue connector is the audio output jack (line-out, typically around -10 dBV). On the enclosed panel PC version, both audio input and audio output are clearly marked (*Figure 9)*

Figure 339: *Figure 9: Audio I/O (embedded/enclosed PC version)*

In addition, EPC/PPC-A7-070HB-C features a miniature 2W embedded speaker for audio reproduction, as well as a small buzzer for alarm/notification sounds *(Figure 9a)*.

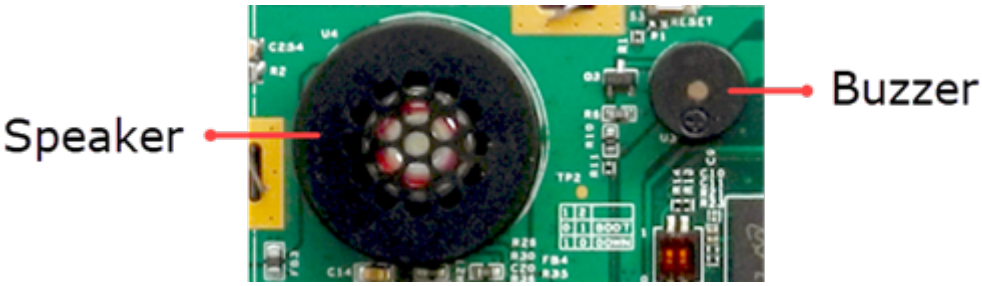

Figure 340: *Figure 9a: 2W Micro Speaker and Buzzer*

Boot DIP Switch

The EPC/PPC-A7-070HB-C Industrial Panel PC supports boot from SD card. If you want to reflash the Operating System (OS), you can use the TF card for that purpose, combined with the **DIP switch** settings *(Figure 10)*.

There is no need to alter the DIP switch settings during regular operation. However, if you need to reinstall the OS, please refer to *Table 4* below. Detailed information on how to re-flash the OS can be found in the Software Documentation.

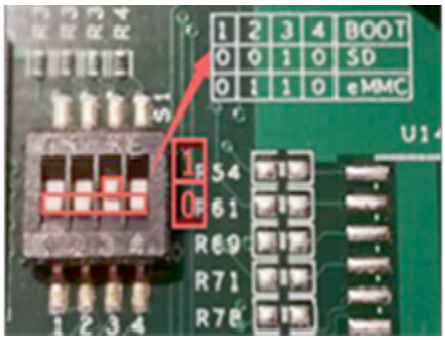

Figure 341: *Figure 10: Boot DIP Switch*

Boot Config Select				
DIP SW	**1**	**2**	**3**	**4**
SD	1	0	0	0
eMMC	1	1	0	1

Table 72 Table 4: Boot Configuration Selection

3D Model

EPC/PPC-A7-070HB-C 3D model can be viewed in the online doc in a web browser, **if you are reading from the PDF** version, please visit the online doc EPC/PPC-A7-070HB-C, select hardware documentation, drag the navigation bar to the 3D Model section.

Disclaimer

This document is provided strictly for informational purposes. Its contents are subject to change without notice. Chipsee assumes no responsibility for any errors that may occur in this document. Furthermore, Chipsee reserves the right to alter the hardware, software, and/or specifications set forth herein at any time without prior notice and undertakes no obligation to update the information contained in this document.

While every effort has been made to ensure the accuracy of the information contained herein, this document is not guaranteed to be error-free. Further, it does not offer any warranties or conditions, whether expressed orally or implied in law, including implied warranties and conditions of merchantability or fitness for a particular purpose. We specifically disclaim any liability with respect to this document, and no contractual obligations are formed either directly or indirectly by this document.

Despite our best efforts to maintain the accuracy of the information in this document, we assume no responsibility for errors or omissions, nor for damages resulting from the use of the information herein. Please note that Chipsee products are not authorized for use as critical components in life support devices or systems.

Technical Support

If you encounter any difficulties or have questions related to this document, we encourage you to refer to our other documentation for potential solutions. If you cannot find the solution you're looking for, feel free to contact us. Please email Chipsee Technical Support at **support@chipsee.com**, providing all relevant information. We value your queries and suggestions and are committed to providing you with the assistance you require.