Industrial PC

EPC/PPC-CM3-070

PN: CS10600RA070

Content can change at anytime, check our website for latest information of this product.
www.chipsee.com

Contents

EPC/PPC-CM3-070 3

1. Product Overview 7

2. Ordering Options 8

2.1. Operating System 8

2.2. Optional Features 9

3. Specifications 10

4. Power Input 12

5. Touch Screen 13

6. Connectivity 14

6.1. RS232/RS485 14

6.2. GPIO Port 16

6.3. USB Connectors 18

6.4. LAN Connectors 19

6.5. WiFi & BT Module 20

6.6. 3G/4G/LTE Module 21

7. TF Card Slot 22

8. Audio Connectors 23

9. Boot DIP Switch 24

10. Mounting Procedure 25

10.1. CS10600RA070E 25

10.2. CS10600RA070P 25

11. Mechanical Specifications 26

11.1. CS10600RA070E 26

11.2. CS10600RA070P 26

12. Disclaimer 27

13. Technical Support 27

EPC/PPC-CM3-070

Front View

Rear View

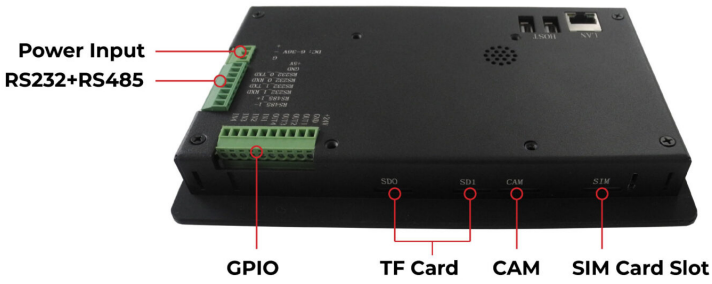
Power Input
RS232+RS485
GPIO
TF Card
CAM
SIM Card Slot

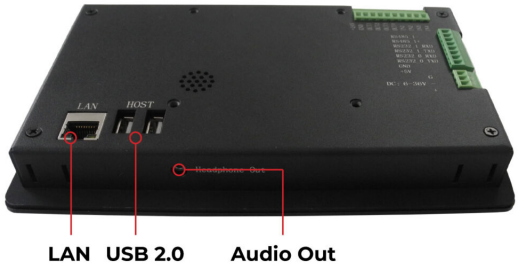
LAN
USB 2.0
Audio Out

Front View (Embedded Variant)

Rear View (Embedded Variant)

Product Overview

The Cortex®-A53 Raspberry Pi® series EPC/PPC-CM3-070 (PN: CS10600RA070) is a high-quality industrial Pi PC. This single board computer features a 7.0” five-point capacitive touch screen with a resolution of 1024 x 600 pixels and brightness of 500 cd/m^2 Raspberry Pi Display.

Key Applications

- Human Machine Interface HMI
- Process Control
- Process Monitoring
- HMI
- IIoT node
- Environmental Monitoring
- PLC
- Automotive applications
- ATM...

It is available both as an embedded solution and as a device hosed in a casing with bezels, thus facilitating different installation options:

- Installation on an industrial cabinet
- Integration with the existing equipment

The EPC/PPC-CM3-070 industrial Pi PC is based around the powerful Raspberry Pi® Compute Module 3, powered by the BCM2837 processor with a processor speed of 1.2GHz and a 1GB RAM.

Ordering Options

Chipsee products can be customized during the ordering process. The product will be shipped with the pre-installed factory defaults if no extra requirements are specified. The table in the Specifications section provides information about the default options bundled with the product.

> **Note**
>
> You can order EPC/PPC-CM3-070 from the official Chipsee Store or from your nearest distributor.

Operating System

This product comes with a pre-installed Debian OS. Chipsee software engineers have created all the drivers, so every hardware feature is readily available for any standard development tool.

If your project requires a different OS, please **Contact us**, and we'll make a customized version that suits your needs.

Optional Features

The EPC/PPC-CM3-070 industrial Pi PC does not include the 3G/4G/LTE modules by default. These modules are optional and can be selected at the Chipsee store during the ordering process.

> **Warning**
>
> Installation, repair, and maintenance tasks should be performed by trained personnel only.
> Chipsee does not bear any responsibility for damage caused by inadequate handling of the product.

Specifications

The EPC/PPC-CM3-070 industrial Pi PC offers a board range of performance and connectivity options for scalable integration, providing expandability according to future needs. Some of the key features are listed in the table below.

EPC/PPC-CM3-070	
CPU	Raspberry Pi® CM3, CM3 Lite; Raspberry Pi® CM3+, CM3+ Lite; 1.2GHZ
Storage	2 TF Cards slots2
RAM	1GB DDR
eMMC	8GB
Display	7.0” IPS LCD, 1024 x 600 resolution px, brightness 500 cd/m^2
Touch	5-point capacitive touch
USB	2 x USB 2.0 Host
LAN	1 x Channel 100M LAN
Audio	3.5mm Audio Out Connector, 2W Speaker Internal
Buzzer	Yes
RTC	Yes, High Accuracy RTC with Lithium Button Coin battery (lithium battery not included)
RS232	2 x RS232
RS485	1 x RS4851
GPIO	8 Channels, 4 Input, 4 Output
WiFi/BT	Onboard WiFi/BT
HDMI	1 Channel
SATA II	1 Channel
3G/4G/LTE	Supported, not mounted by default
Camera	Yes, not mounted by default
Power Input	From 6V to 36V
Current at 12V	700mA Max
Power Consumption	8.4W Typical
Working Temperature	From -20°C to +70°C
OS	Debian
Dimensions	CS10600RA070E: 190 x 107.8 x 27.7mm

EPC/PPC-CM3-070	
	CS10600RA070P: 206 x 135 x 30.1mm
Weight	CS10600RA070E: 400g
	CS10600RA070P: 700g

Table 478 Key Features

1. The RS485 multiplexes with the RS232_1, which means that you cannot use RS232_1 and RS485 at the same time.
2. Chipsee designed one of the TF card slots for Lite version but it does not have an eMMC. We designed the other one for storage expansion.

Attention

Chipsee does not install a lithium battery by default, as we cannot ship products with batteries. We recommend you buy it locally and install it by yourself. The lithium battery part number is CR1220. Please **Contact us** if you need help.

Power Input

The EPC/PPC-CM3-070 industrial Pi PC can be powered by a wide range of input voltages: From 6V to 36V DC. There are two types of power input connectors. One is a **3 Pin, 3.81mm screw terminal** connector, and the other is a **2.1mm DC input head**. The polarity and the pinout is clearly marked on the housing of the CS10600RA070P version, as well as on the board itself of the CS10600RA070E version, as shown in the figures below.

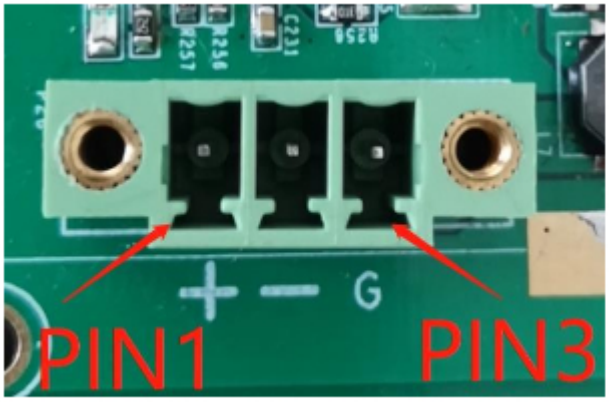

Figure 974: *Power Input (embedded/enclosed version)*

Note that the "**+**" sign represents the positive power input, and it is printed both at the casing and as a silk-screen on the board of the embedded version. The "**-**" terminal is shorted to the ground.

Power Input Definition		
Pin Number	**Definition**	**Description**
Pin 1	Positive Input	DC Power **Positive Terminal**
Pin 2	Negative Input	DC Power **Negative Terminal**
Pin 3	Ground	**Power System Ground**

Table 479 Power Connector

Note

The system ground "**G**" is connected to power negative "**-**" on board.
The central pin is positive.

Touch Screen

The EPC/PPC-CM3-070 industrial Pi PC uses a 5-point capacitive touch screen. The figure below shows the capacitive touch screen connected to the motherboard via the **FPC connector**.

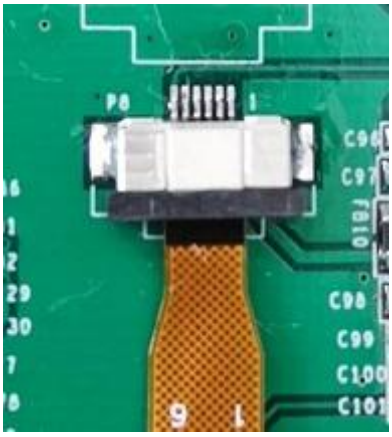

Figure 975: *Capacitive Touch Connector*

Attention

A capacitive touch screen is susceptible to power noise and Electromagnetic Radiation (EMR). It may cause LCD ripples or even capacitive touch malfunction. If using a capacitive multi-touch test application, you might notice the touch points float erratically across the display. There are several solutions to this problem:

1. Use a high-quality Power Adapter Unit (PSU) with low EMR. You can also provide power from a battery.
2. Make sure that the EPC/PPC-CM3-070 Power Input connector (pin 3) is properly connected to the Power System Ground to provide sufficient EMI shielding and eliminate the problem entirely.
3. Bad GND problem can also be confirmed by touching pin 3 of the Power Input connector with one hand while operating the capacitive touch screen with the other hand. In this case, the operator's body acts as the Power System Ground.

Connectivity

There are many connectivity options available on the EPC/PPC-CM3-070 industrial Pi PC. It has 2 x USB 2.0 Host (can be customized to Host or OTG), 1 x Channel 100M LAN (RJ45) Ethernet connector supporting up to 1 Gbps, and 2 x UART terminals (RS232/RS485).

RS232/RS485

The serial communication interfaces (RS485, RS232, and CAN) are routed to a **8-pin 3.81mm terminal**, as illustrated on the figure below.

Figure 976: *Relation between serial pins on embedded vs. enclosed version of the* EPC/PPC-CM3-070 *Industrial PC*

The table below offers more detailed description of every pin and its definition:

RS232 / RS485 / CAN Pin Definition:		
Pin Number	**Definition**	**Description**
Pin 8	RS485_1-	CPU UART1, RS485 –(B) signal
Pin 7	RS485_1+	CPU UART1, RS485 +(A) signal
Pin 6	RS232_1_RXD	CPU UART1, CPU RS232 RXD signal
Pin 5	RS232_1_TXD	CPU UART1, CPU RS232 TXD signal
Pin 4	RS232_0_RXD	CPU UART0, CPU RS232 RXD signal
Pin 3	RS232_0_TXD	CPU UART0, CPU RS232 TXD signal
Pin 2	GND	System Ground
Pin 1	+5V	System +5V Power Output, No more than 1A Current output

Table 480 Connectivity Section

Attention

RS485_1 and RS232_1 share the same channel (UART1) and therefore you cannot use RS232_1 and RS485_1 at the same time.

GPIO Port

The EPC/PPC-CM3-070 industrial Pi PC has a 10 Pin 3.81mm **GPIO Connector**, as shown on the figure below. The table below gives details about the definition of every Pin.

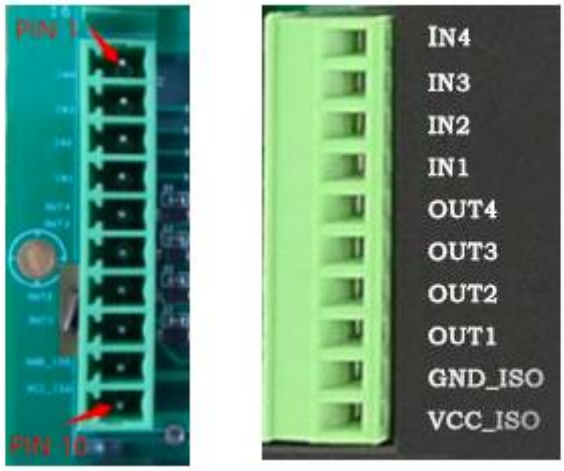

Figure 977: *GPIO Connector*

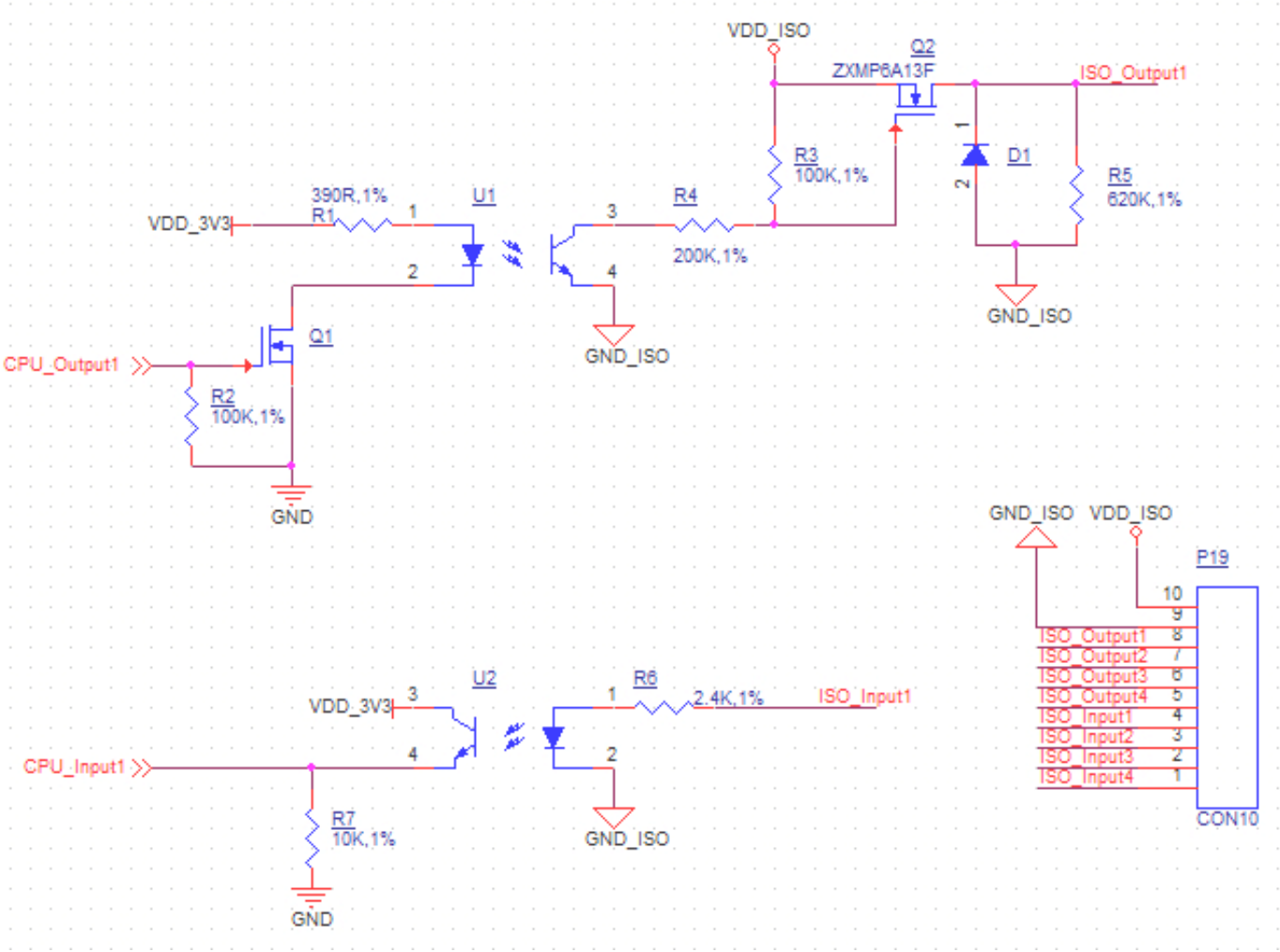

Isolated GPIO reduced schematic

GPIO Connector Pin Definition:		
Pin Number	**Definition**	**Description**
Pin 10	VCC	Isolated Power +5V Input
Pin 9	GND	Isolated Ground
Pin 8	OUT1	Isolated Output 1
Pin 7	OUT2	Isolated Output 2
Pin 6	OUT3	Isolated Output 3
Pin 5	OUT4	Isolated Output 4
Pin 4	IN1	Isolated Input 1
Pin 3	IN2	Isolated Input 2
Pin 2	IN3	Isolated Input 3
Pin 1	IN4	Isolated Input 4

Table 481 GPIO Connector Pin-out

Attention

- The GPIO has been Opt-Isolated and it uses the 5V Logic by default. You can use an external isolated power input but the power input range should be from 5V to 24V DC.
- The 4 output channels can drive at most 500mA current on each channel.

USB Connectors

There are 2 x Type A **USB HOST connectors** onboard, as shown on the figure below.

Figure 978: *USB HOST Connectors (embedded/enclosed PC version)*

The product has one USB OTG connector that works as a slave by default. You can use it to establish a connection with the host PC and for downloading the system to the eMMC of CM3/CM3+.

Figure 979: *USB OTG Connector*

> **Warning**
>
> Be careful not to touch surrounding electronic components accidentally while plugging in USB devices into the embedded Industrial PC version.

LAN Connectors

LAN (RJ45) connector provides Ethernet connectivity over standardized Ethernet cables as shown the figure below. The integrated Ethernet interface supports up to 1 Gbps data throughput.

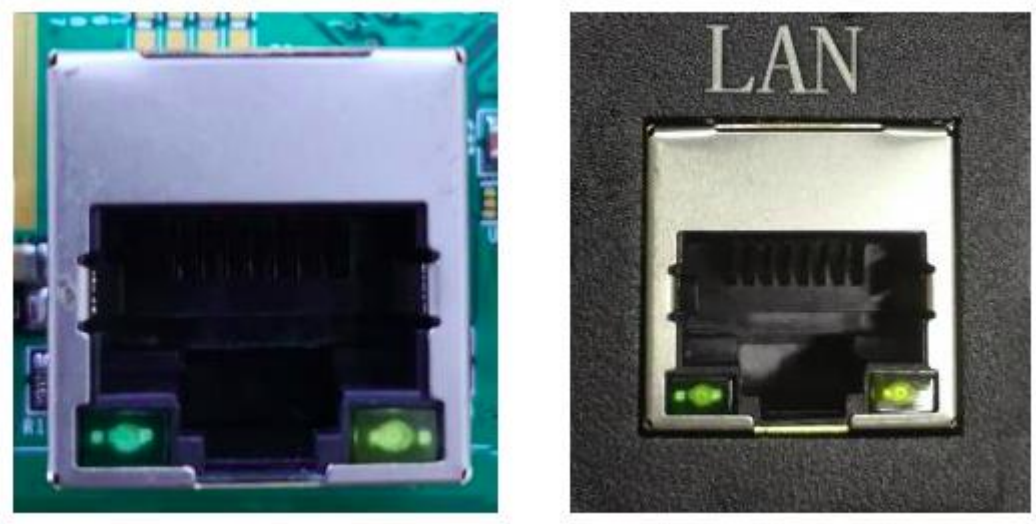

Figure 980: *RJ45 LAN Connectors (embedded/enclosed PC version)*

> **Note**
>
> Use CAT5 or better cables to achieve full data throughput over maximum distance defined by the 1000BASE-T standard (100m).

WiFi & BT Module

The EPC/PPC-CM3-070 industrial Pi PC is equipped with the popular **Realtek RTL8723 WiFi/BT module** that supports BT/BLE 4.0 (with backward compatibility), as well as 802.11bgn 2.4 GHz Wireless LAN (WLAN).

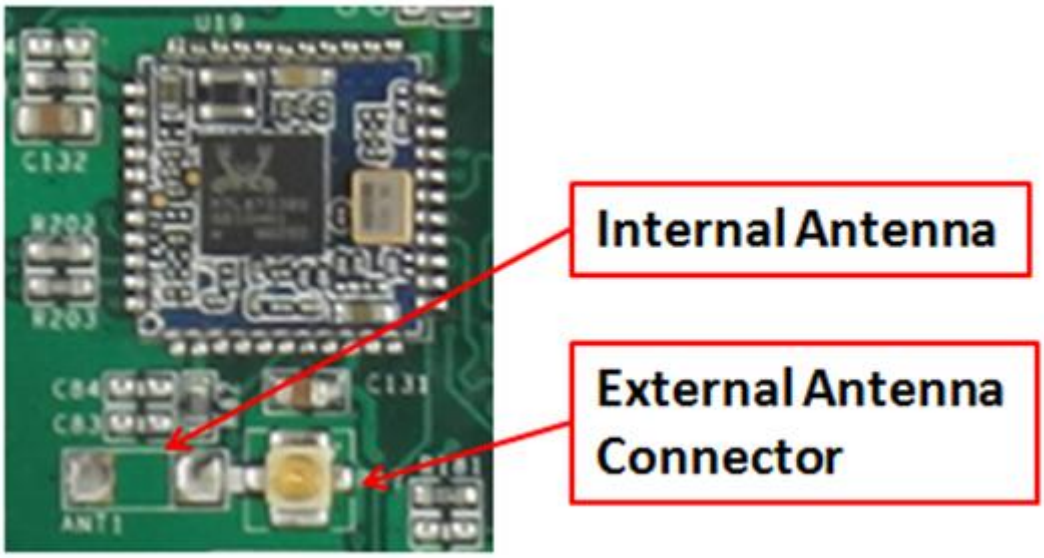

Figure 981: *RTL8273 WiFi/BT Module*

The enclosed (CS10600RA070P) variant of the product also includes an SMA connector for an external WiFi/BT antenna, as illustrated in the figure below.

Figure 982: *WiFi+BT Antenna*

3G/4G/LTE Module

The EPC/PPC-CM3-070 industrial Pi PC is equipped with a **mini-PCIe connector** that can connect to a 3G/4G module. The customer will also need a SIM Card Holder and a 3G/4G Antenna Connector to ensure 3G/4G works on the EPC/PPC-CM3-070.

Figure 983: *3G/4G Module*

Figure 984: *SIM Card Holder and 3G/4G Antenna Connector*

Attention

The product does not come shipped with the 3G/4G module by default.

TF Card Slot

The EPC/PPC-CM3-070 industrial Pi PC features 2 x **TF Card (micro SD) slot**: SD0 and SD1. Both slots can address up to 32GB of memory.
The SD0 is used only for the Lite version of Compute Module that has no internal eMMC.
The SD1 is used for external storage.

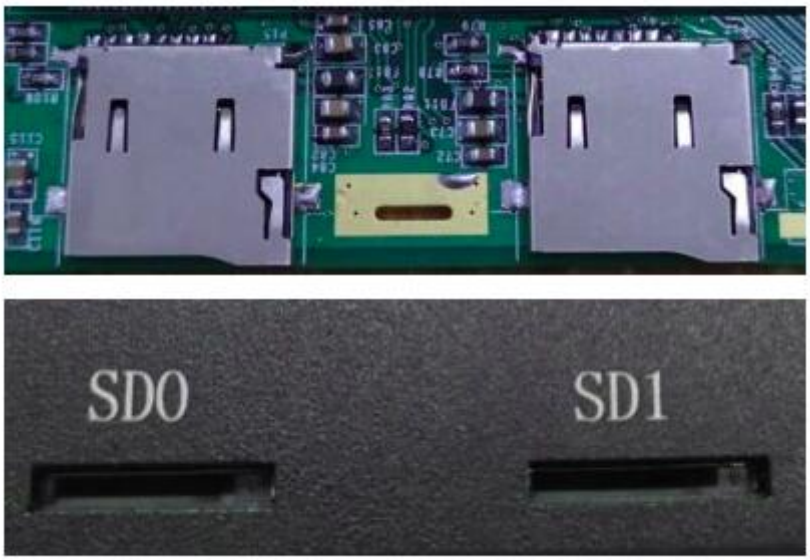

Figure 985: *TF (micro SD) Card Slot*

Note

The product does not come shipped with the TF Card by default.

Audio Connectors

The EPC/PPC-CM3-070 industrial Pi PC features some audio peripherals. It has 1 x **3.5mm audio output jack**.
Also, the EPC/PPC-CM3-070 industrial Pi PC has a miniature 2W internal speaker for audio reproduction, as well as a small buzzer for alarm/notification sounds.

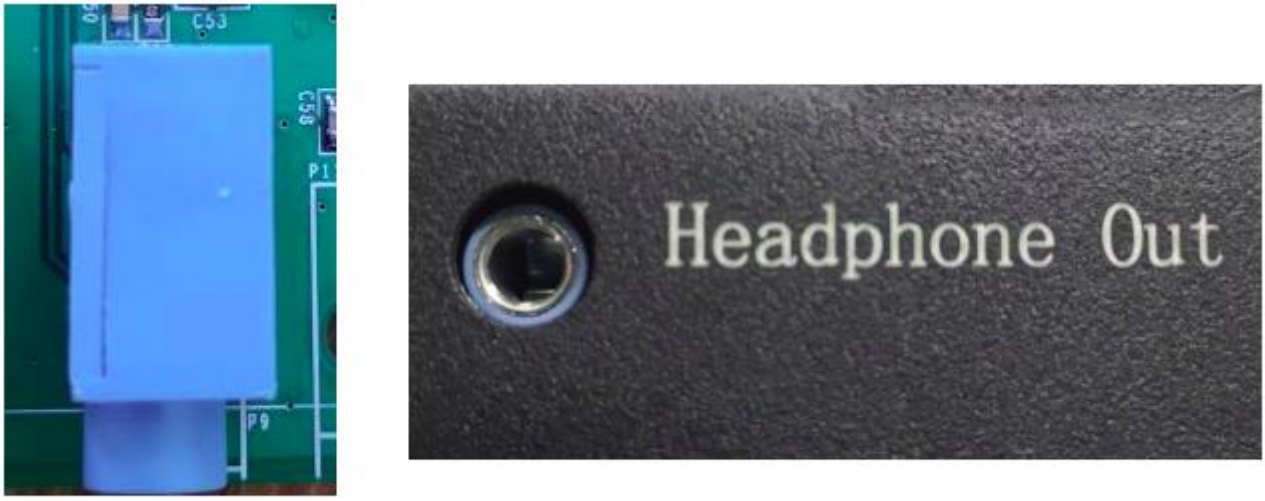

Figure 986: *Audio Connector (embedded/enclosed PC version)*

Boot DIP Switch

The EPC/PPC-CM3-070 industrial Pi PC has one switch on the board marked as SW1, shown in the figure below. It has two positions USB and eMMC.
When switch is in the USB position, the Raspberry Pi will boot from the USB connector. You can use this function to download the OS software to the internal eMMC.
When switch is in the eMMC position, the Raspberry Pi will boot from internal eMMC.

There is no need to alter the DIP switch settings during regular operation. However, if you need to reinstall the OS, please refer to the detailed information on how to re-flash the OS from the Software Documentation.

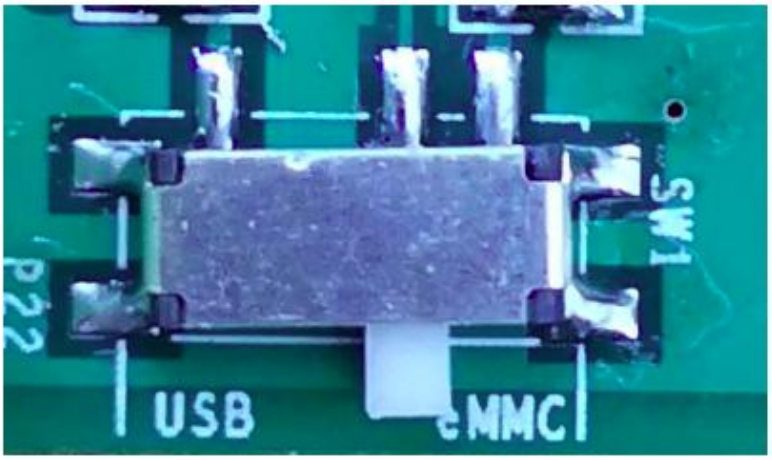

Figure 987: *Boot DIP Switch*

Mounting Procedure

The EPC/PPC-CM3-070 industrial Pi PC can be mounted with 4 x M4 screws, enabling simplified installation onto any standard mounting fixture.

CS10600RA070E

You can mount CS10600RA070E with the Embedded mounting method, as shown on the figure below.

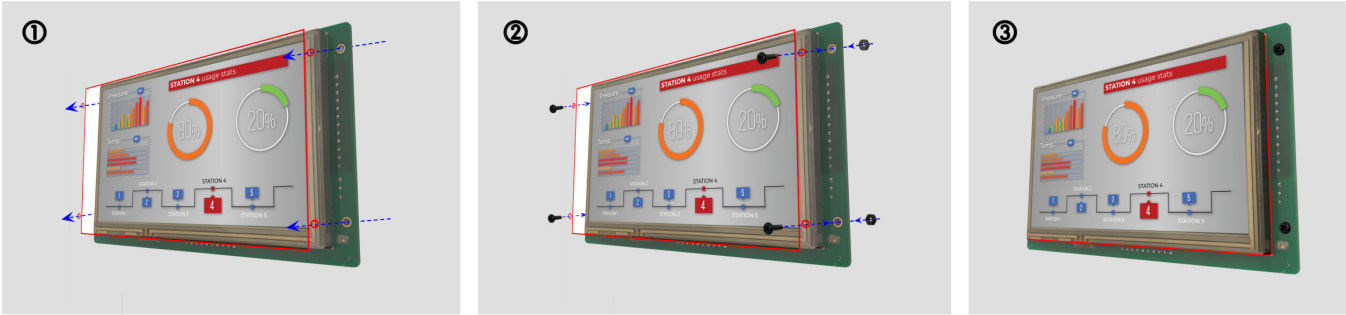

Figure 988: *Embedded mounting*

CS10600RA070P

You can mount CS10600RA070P with the Vesa (75 x 75mm) and Panel mounting methods, as shown on the figure below.

Figure 989: *Panel mounting*

> **Attention**
>
> Please make sure the display is not exposed to high pressure when mounting into an enclosure.

You can find detailed information about mounting in the Mount IPC Guide.

Mechanical Specifications

CS10600RA070E

The outer mechanical dimensions of CS10600RA070E are 190 x 107.8 x 27.7mm (W x L x H). Please refer to the technical drawing in the figure below for details related to the specific product measurements.

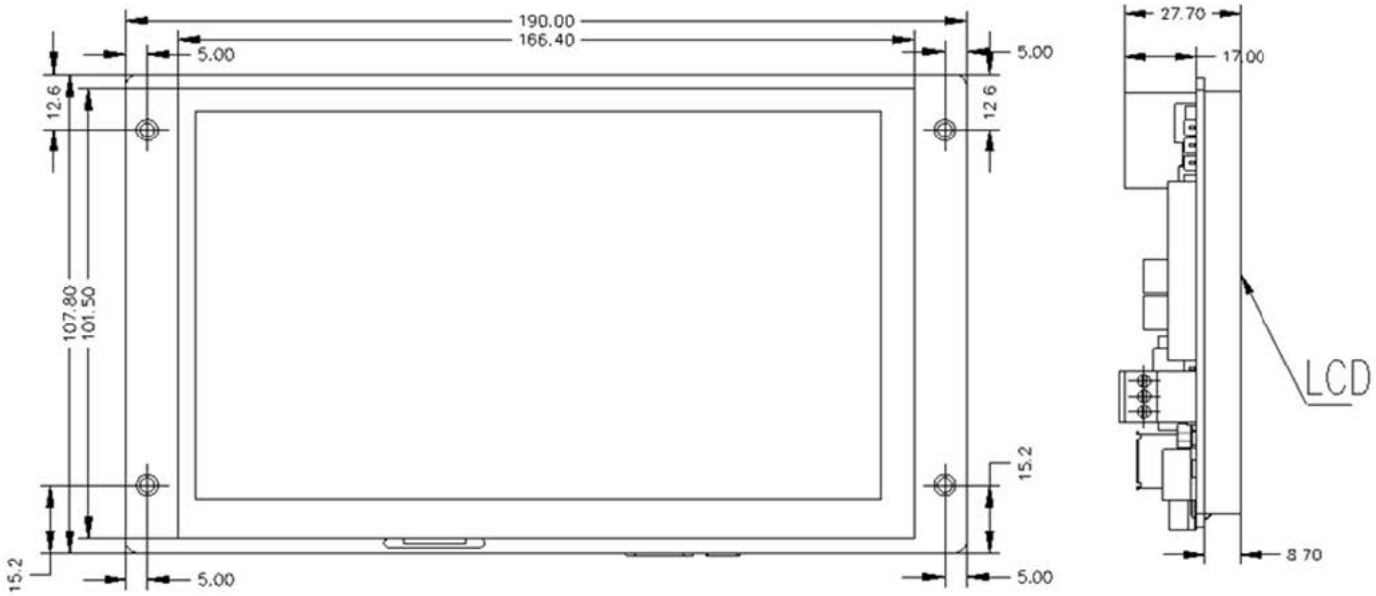

Figure 990: CS10600RA070E *Technical Drawing*

CS10600RA070P

For CS10600RA070P, the outer mechanical dimensions are 206 x 135 x 30.1mm (W x L x H).

Disclaimer

This document is provided strictly for informational purposes. Its contents are subject to change without notice. Chipsee assumes no responsibility for any errors that may occur in this document. Furthermore, Chipsee reserves the right to alter the hardware, software, and/or specifications set forth herein at any time without prior notice and undertakes no obligation to update the information contained in this document.

While every effort has been made to ensure the accuracy of the information contained herein, this document is not guaranteed to be error-free. Further, it does not offer any warranties or conditions, whether expressed orally or implied in law, including implied warranties and conditions of merchantability or fitness for a particular purpose. We specifically disclaim any liability with respect to this document, and no contractual obligations are formed either directly or indirectly by this document.

Despite our best efforts to maintain the accuracy of the information in this document, we assume no responsibility for errors or omissions, nor for damages resulting from the use of the information herein. Please note that Chipsee products are not authorized for use as critical components in life support devices or systems.

Technical Support

If you encounter any difficulties or have questions related to this document, we encourage you to refer to our other documentation for potential solutions. If you cannot find the solution you're looking for, feel free to contact us. Please email Chipsee Technical Support at **support@chipsee.com**, providing all relevant information. We value your queries and suggestions and are committed to providing you with the assistance you require.