Industrial PC

CS-CM4-BOX

PN: CSRA4BOX

Content can change at anytime, check our website for latest information of this product.
www.chipsee.com

Contents

CS-CM4-BOX 3

1. Product Overview 7

2. Ordering Options 8

2.1. Pi® CM4 Module 8

2.2. Operating System 8

2.3. Optional Features 9

3. Specifications 10

4. Power Input 12

5. Connectivity 14

5.1. RS232/RS485/CAN 14

5.2. GPIO Port 16

5.3. USB Connectors 19

5.4. LAN 21

5.5. WiFi & BT Module 22

5.6. 3G/4G/LTE Module 23

5.7. Zigbee Module 25

5.8. Camera Connector 27

6. TF Card Slot 29

7. Audio Connectors 30

8. PROG Button 31

9. Mounting Procedure 32

10. Mechanical Specifications 33

10.1. CS-CM4-BOX 33

11. Disclaimer 34

12. Technical Support 34

CS-CM4-BOX

Front View

Rear View

Chipsee
PN:CSRA4BOX
OS: Debian 11
SN: 2023111670000289
https://chipsee.com
Origin:Made in China

Side View 1

WIFI
Audio
HDMI-D
Type-C
TF
SIM
USB HOST
LAN1
LAN0
PROG
DC: 6-36V
4G

Side View 2

CAN1_H
CAN1_L
RS485_5-
RS485_5+
RS232_5_RXD
RS232_5_TXD
RS485_3-
RS485_3+
RS232_3_RXD
RS232_3_TXD
RS232_2_RXD
RS232_2_TXD
RS232_0_RXD
RS232_0_TXD
GND
+5V
VDD_ISO
GND_ISO
OUT1
OUT2
OUT3
OUT4
IN1
IN2
IN3
IN4
DC: 6~36V
+ - G

Product Overview

The Cortex®-A72 Raspberry Pi® series CS-CM4-BOX (PN: CSRA4BOX) is a high-quality fanless industrial Pi single board computer .

Key Applications

- Process Control
- Process Monitoring
- IoT node
- Environmental Monitoring
- PLC
- Automotive applications
- ATM...

From the ground-up, the CPU is built for low power consumption, around 5.4W (max). As such, it is best suited for mobile and power-constrained industrial or field applications. A specially designed aluminum alloy housing with fins for increased heat dissipation serves as a passive cooler, eliminating the need for built-in fans. The fanless design reduces noise, as well as the maintenance costs and efforts, leading to increased reliability at the same time.

The CS-CM4-BOX industrial Pi PC is based around the powerful Raspberry Pi® Compute Module 4, powered by the Quad Cortex®-A72 processor with a processor speed of 1.5GHz.

Ordering Options

Chipsee products can be customized during the ordering process. The product will be shipped with the pre-installed factory defaults if no extra requirements are specified. The table in the Specifications section provides information about the default options bundled with the product.

> **Note**
>
> You can order CSRA4BOX from the official Chipsee Store or from your nearest distributor.

Pi® CM4 Module

The Pi® Compute Module 4 appears in different versions depending on the size of the DDR4 and eMMC.
The CS-CM4-BOX industrial Pi PC does not include the CM4 Raspberry Pi® module by default. If you would like to purchase it with a CM4, you can select it at the Chipsee store during the ordering process.

Operating System

This product comes with a pre-installed Raspberry Pi OS. Chipsee software engineers have created all the drivers, so every hardware feature is readily available for any standard development tool.

If your project requires a different OS, please **Contact us**, and we'll make a customized version that suits your needs.

Optional Features

The CS-CM4-BOX industrial Pi PC does not include the 3G/4G/LTE modules by default. These modules are optional and can be selected at the Chipsee store during the ordering process.

> **Warning**
>
> Installation, repair, and maintenance tasks should be performed by trained personnel only.
> Chipsee does not bear any responsibility for damage caused by inadequate handling of the product.

Specifications

The CS-CM4-BOX industrial Pi PC offers a broad range of performance and connectivity options for scalable integration, providing expandability according to future needs. Some of the key features are listed in the table below.

CS-CM4-BOX	
CPU	Raspberry Pi® CM4, CM4 Lite; Quad Cortex-A72 at 1.5GHz
Storage	Support for 1 x TF Card3
RAM	2/4/8 GB, Based on CM4
eMMC	16/32 GB, Based on CM4
Display	N/A
Touch	N/A
USB	2 x USB 3.0 Host, 1 x USB Type-C OTG
LAN	2 x Giga LAN
Audio	3.5mm Audio Out Connector, 2W Speaker Internal
Buzzer	Onboard Buzzer, driven by GPIO
RTC	High accuracy RTC with farad capacitor, can work 1 week after power off **(default)**. High accuracy RTC with lithium coin battery, can work 3 years after power off *(optional)*.
RS232	Default to 2 x RS232, up to 4 x RS232
RS485	Default to 2 x RS4851, these 2 x RS485 can be configured as 2 x RS232
CAN	1 x CAN-BUS
GPIO	Option 1: 4 x input, 4 x output from expander IC (optical isolated, DEFAULT). Option 2: 6 x CM4 CPU GPIO (conflict with option 1).
I2C	Not Supported
WiFi/BT	Supported but depending on the CM4 selected2
ZIGBEE	Onboard Zigbee module, not mounted by default
HDMI	Yes
SATA II	Not Supported
3G/4G/LTE	Supported, not mounted by default
Camera	Yes, not mounted by default. Available on the board in the embedded PC. Requires a customized case to be exposed in an enclosed PC.
Power Input	From 6V to 36V
Current	360mA (max) at 15V

CS-CM4-BOX	
Power Consumption	5.4W (max)
Working Temperature	From 0°C to +60°C
OS	Raspberry Pi OS
Dimensions	CS-CM4-BOX: 209 x 125 x 37.3mm
Weight	CS-CM4-BOX: 900g
Mounting Method	CS-CM4-BOX: Rear, VESA

Table 464 Key Features

1. The RS485 circuit controls the Input and Output direction automatically, there's no need to control it from within the software.
2. The default product without the CM4 does not include a Wi-Fi/BT module. You can include a CM4 that has the Wi-Fi/BT module at the Chipsee store during the ordering process.
3. Chipsee designed one TF card slot for CM4 Lite version which has no eMMC to boot OS.

Power Input

The CS-CM4-BOX industrial Pi PC can be powered by a wide range of input voltages: From 6V to 36V DC. There are two types of power input connectors. One is a **3 Pin, 3.81mm screw terminal** connector, and the other is a **2.1mm DC input head**. As shown in the figure below.

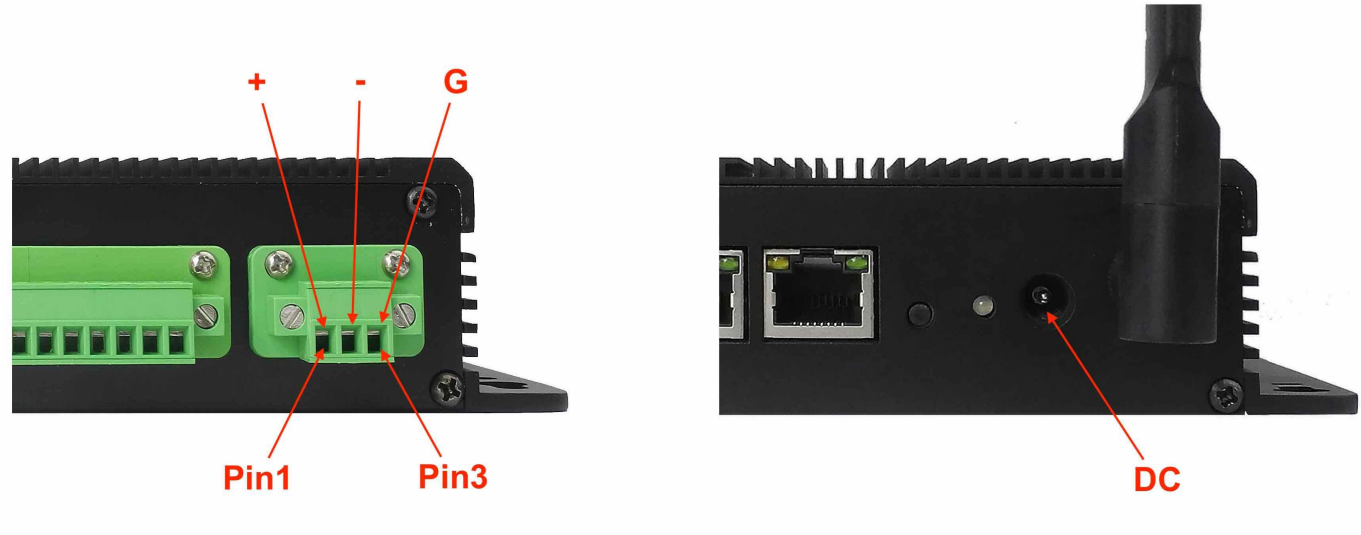

Power Input

Note that the "**+**" sign represents the positive power input, and it is printed both at the casing and as a silk-screen on the board of the embedded version. The "**-**" terminal is shorted to the ground.

Power Input Definition		
Pin Number	**Definition**	**Description**
Pin 1	Positive Input	DC Power **Positive Terminal**
Pin 2	Negative Input	DC Power **Negative Terminal**
Pin 3	Ground	**Power System Ground**

Table 465 Power Connector

> **Note**
>
> The system ground "**G**" is connected to power negative "**-**" on board.

There is another power input port, it is a 2.1mm x 5.5mm x 9.5mm DC jack. For a proper DC power connector, refer to the figure below.

DC Jack

Connectivity

There are many connectivity options available on the CS-CM4-BOX industrial Pi PC. It has 2 x USB 3.0 Host, 1 x USB Type-C OTG, 2 x Giga LAN (RJ45) Ethernet connector supporting up to 1 Gbps, and 4 x UART and 1 x CAN terminals (RS232/RS485/CAN).

RS232/RS485/CAN

The serial communication interfaces (RS485, RS232, and CAN) are routed to a 16-pin 3.81mm terminal, as illustrated in the figure below.

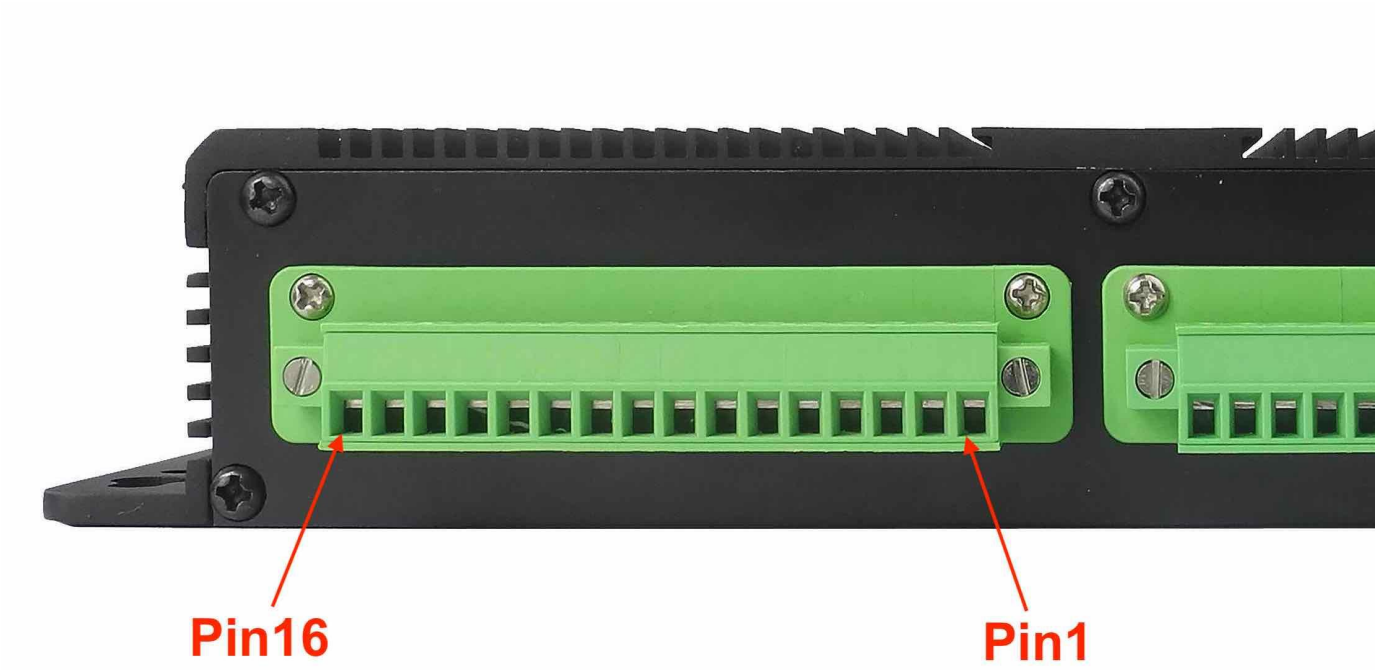

RS232-RS485-CAN on the CS-CM4-BOX *Industrial PC*

Attention

1. RS485_3 and RS485_5 can control the input and output direction automatically. There's no need to control it from within the software.
2. The 120Ω match resistor for RS485 is **already** mounted by default.
3. The 120Ω match resistor for CAN is **NOT** mounted by default. Be sure to mount the match resistor when testing CAN.
4. RS485_3 and RS232_3 share UART3 and can't work at the same time; RS485_5 and RS232_5 share UART5 and can't work at the same time. Meaning the product provides 4 x RS232 + 0 x RS485, or 2 x RS232 + 2 x RS485, or 3 x RS232 + 1 x RS485.

The table below offers more detailed description of every pin and its definition:

RS232 / RS485 / CAN Pin Definition:		
Pin Number	**Definition**	**Description**
Pin 16	CAN_H	CAN BUS “H” signal
Pin 15	CAN_L	CAN BUS “L” signal
Pin 14	RS485_5-	CPU UART5, RS485 –(B) signal
Pin 13	RS485_5+	CPU UART5, RS485 +(A) signal
Pin 12	RS232_5_RXD	CPU UART5, RS232 RXD signal
Pin 11	RS232_5_TXD	CPU UART5, RS232 TXD signal
Pin 10	RS485_3-	CPU UART3, RS485 –(B) signal
Pin 9	RS485_3+	CPU UART3, RS485 +(A) signal
Pin 8	RS232_3_RXD	CPU UART3, RS232 RXD signal
Pin 7	RS232_3_TXD	CPU UART3, RS232 TXD signal
Pin 6	RS232_2_RXD	CPU UART2, RS232 RXD signal
Pin 5	RS232_2_TXD	CPU UART2, RS232 TXD signal
Pin 4	RS232_0_RXD	CPU UART0, RS232 RXD signal
Pin 3	RS232_0_TXD	CPU UART0, RS232 TXD signal
Pin 2	GND	System Ground
Pin 1	+5V	System +5V Power Output, No more than 1A Current output

Table 466 Connectivity Section

GPIO Port

The CS-CM4-BOX industrial Pi PC has a 10 Pin 3.81mm **GPIO Connector**, as shown in the figure below. The table below gives details about the definition of every Pin.

> **Attention**
>
> 1. In order to use the Isolated Output, you need to add an external Isolated Power to the VDD_ISO and GND_ISO. The power voltage should not exceed 24V.
> 2. The output current can achieve 500mA for every channel, but it also depends on the isolated power that is connected.
> 3. In order to use the Isolated Input, you need to add a signal to the ISO_InputX and GND_ISO. A 2.4KΩ resistor, as R6, has been added to limit the input current, as shown in the figure below. This resistor should work well for the 5-24V input signal. If your input signal is less than 5V, please change this input resistor. The reduced schematic is for reference purpose, if you need the precise resistor schematic, please contact us.

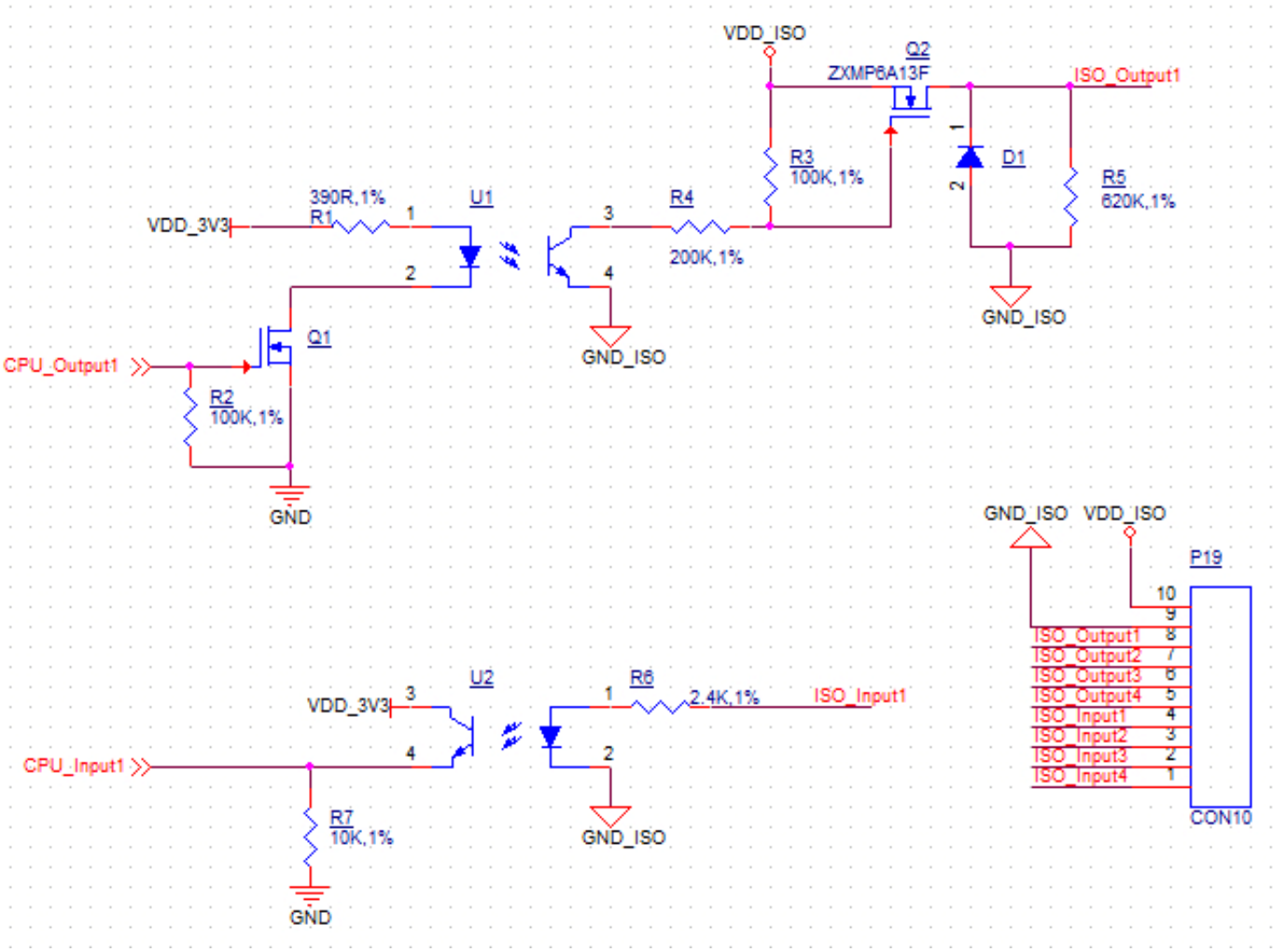

Isolated GPIO reduced schematic

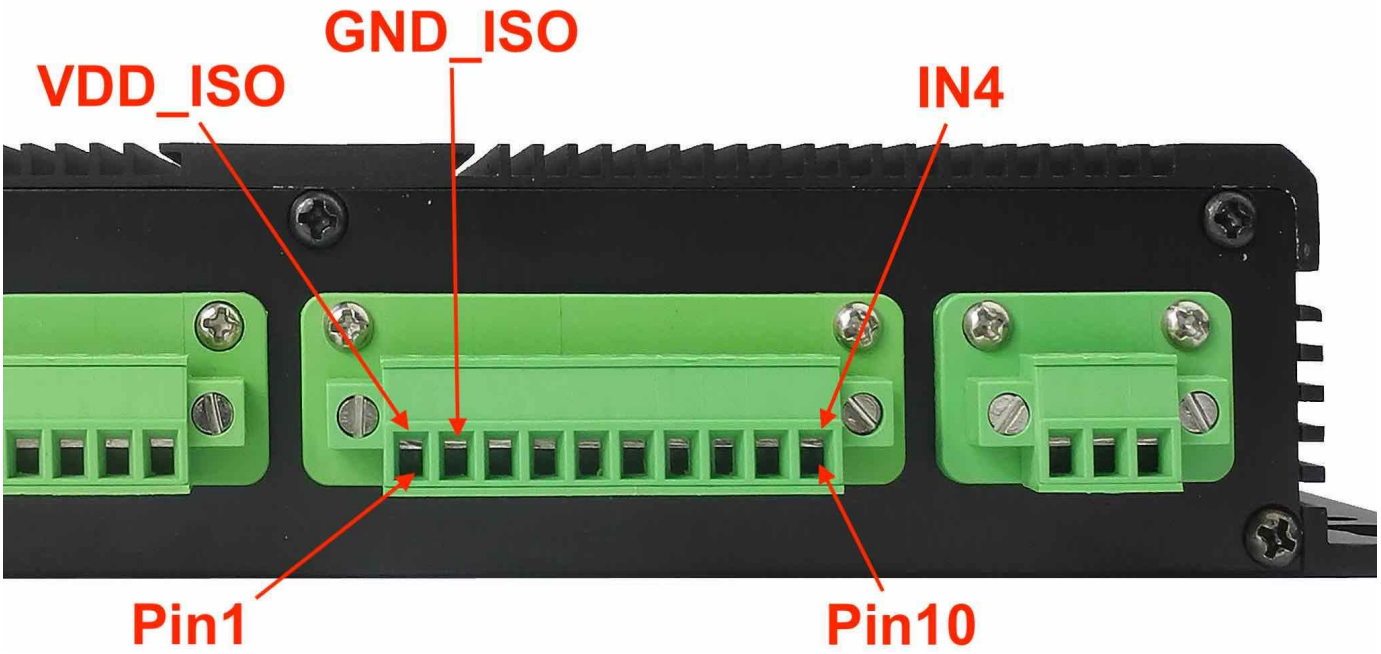

GPIO Connector

GPIO Connector Pin Definition:		
Pin Number	**Definition**	**Description**
Pin 10	VDD_ISO	Isolated Power +5V ~ +24V Input
Pin 9	GND_ISO	Isolated Ground
Pin 8	OUT1	Isolated Output 1
Pin 7	OUT2	Isolated Output 2
Pin 6	OUT3	Isolated Output 3
Pin 5	OUT4	Isolated Output 4
Pin 4	IN1	Isolated Input 1
Pin 3	IN2	Isolated Input 2
Pin 2	IN3	Isolated Input 3
Pin 1	IN4	Isolated Input 4

Table 467 GPIO Connector Pin-out

The CS-CM4-BOX also supports GPIO routed from the Raspberry Pi CM4 CPU directly, if you choose to use the 6 channel **CPU GPIO**, instead of 8 channel **optical isolated GPIO**, you can take advantage of the community software libraries of Pi GPIO. If you choose to use CPU GPIO, you won't be able to use the 8 channel optical isolated GPIO. Below is the pin definition of CPU GPIO:

> **Warning**
>
> Without the optical isolation, CPU might be damanged if dangerous voltages are applied to CPU GPIO. Be careful when using CPU GPIO directly.

CPU GPIO Pin Definition:		
Pin Number	**Definition**	**Description**
Pin 10	VDD_ISO	VDD_3V3
Pin 9	GND_ISO	GND
Pin 8	OUT1	GPIO22
Pin 7	OUT2	GPIO23
Pin 6	OUT3	GPIO24
Pin 5	OUT4	GPIO25
Pin 4	IN1	GPIO26
Pin 3	IN2	GPIO27
Pin 2	IN3	NC
Pin 1	IN4	NC

Table 468 CPU GPIO Pin Out

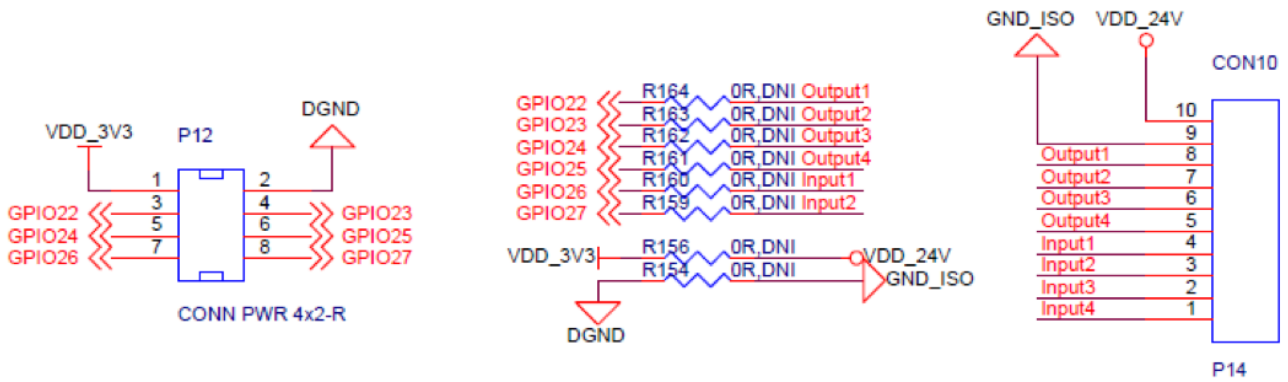

CPU GPIO Reduced Schematic

USB Connectors

There are 2 x USB 3.0 Host, 1 x USB Type-C OTG onboard, as shown in the figure below.

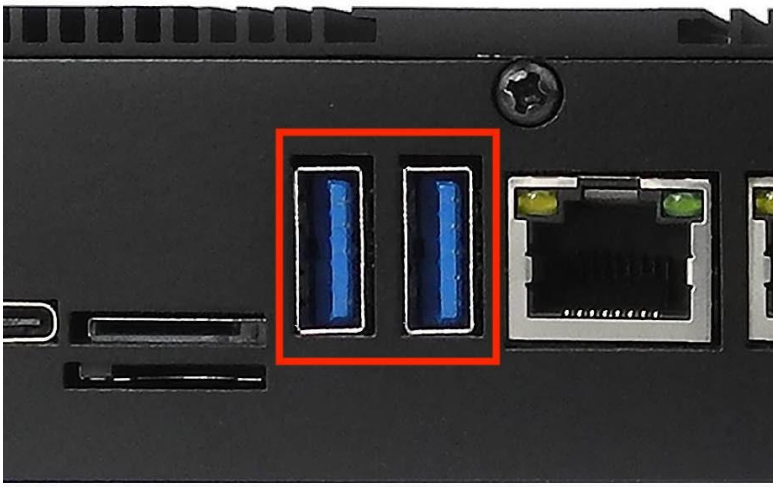

USB HOST Connectors

Attention

1. These two USB host connectors can drive 500mA for each channel at most.

The product has one USB Type-C OTG connector that works as a slave by default. You can use it to establish a connection with the host PC and for downloading the system to the eMMC of CM4 module.

USB Type-C OTG Connector

Warning

1. Be careful not to touch surrounding electronic components accidentally while plugging in USB devices into the embedded Industrial PC version.
2. Remember to unplug the Type-C cable after flashing OS, otherwise the USB hosts won't work.

LAN

The 2 x Giga LAN provides Ethernet connectivity over standardized Ethernet cables as shown in the figure below. The integrated Ethernet interface supports up to 1 Gbps data throughput. These Giga LAN signals come from the CM4 module directly.

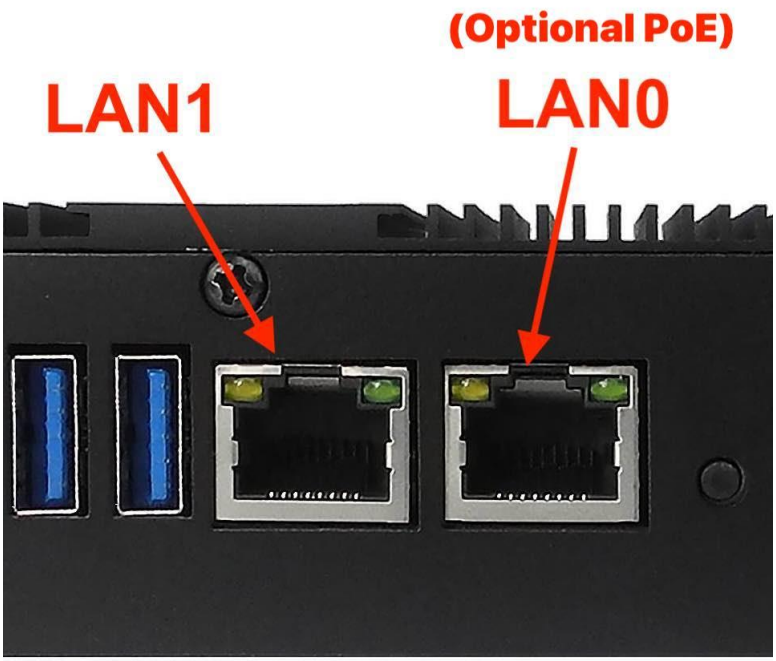

RJ45 LAN Connector

> **Note**
>
> Use CAT5 or better cables to achieve full data throughput over maximum distance defined by the 1000BASE-T standard (100m).

WiFi & BT Module

The default CS-CM4-BOX without the CM4 does not include a Wi-Fi/BT module.
If you include a CM4 that has the Wi-Fi/BT module, the product will have Wi-Fi/BT feature.
The enclosed (CS-CM4-BOX) variant of the product also includes an SMA connector for an external WiFi/BT antenna, as illustrated in the figure below.

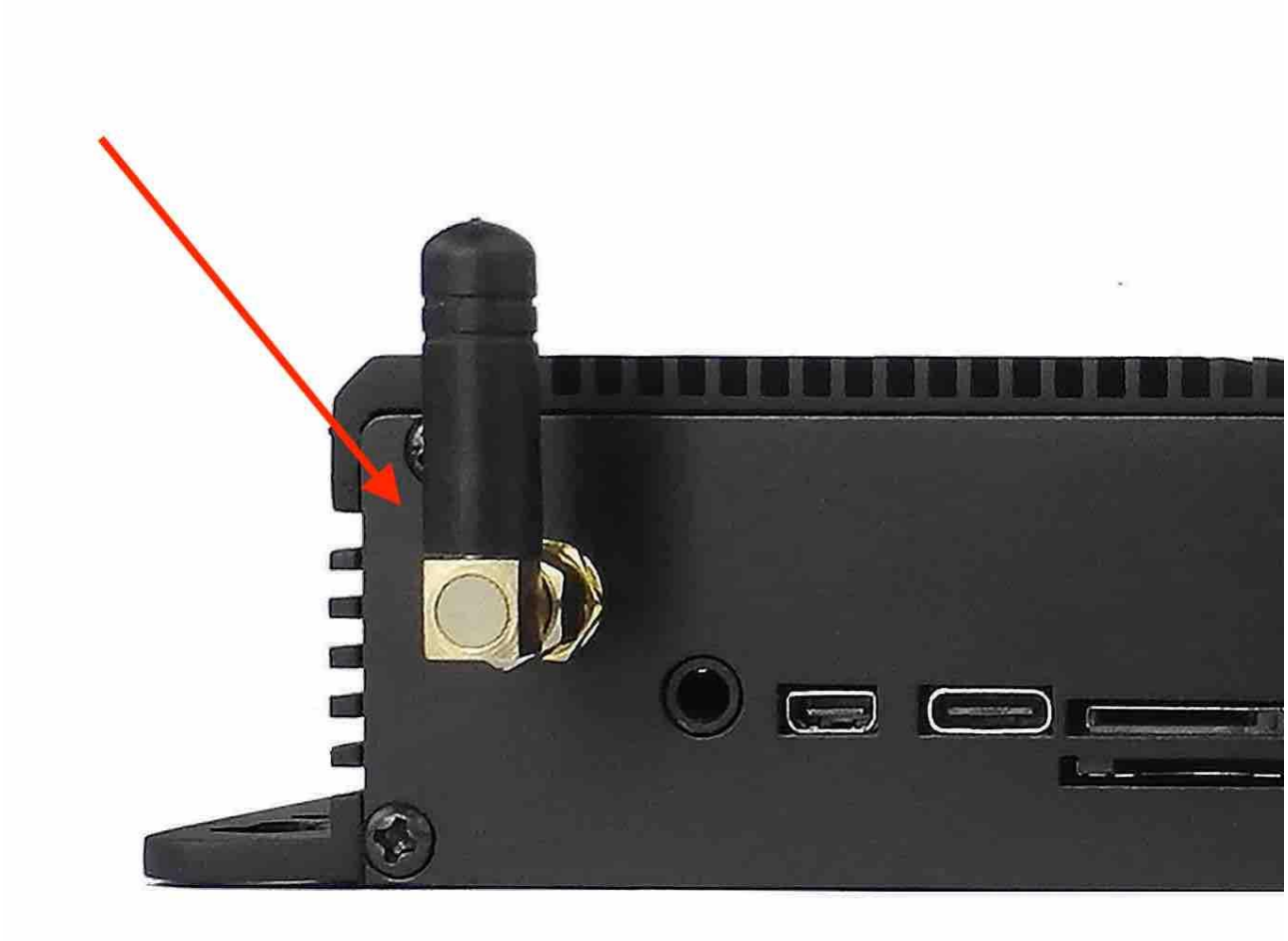

WiFi+BT Antenna

Attention

The product does not come shipped with the Wi-Fi/BT module by default.

3G/4G/LTE Module

The CS-CM4-BOX industrial Pi PC is equipped with a **mini-PCIe connector** that can connect to a 3G/4G/LTE module. The customer will also need a SIM Card Holder and a 3G/4G/LTE antenna to ensure 3G/4G/LTE works on the CS-CM4-BOX. SIM card does **NOT** support hot plug. **Power off** before inserting or removing SIM card.

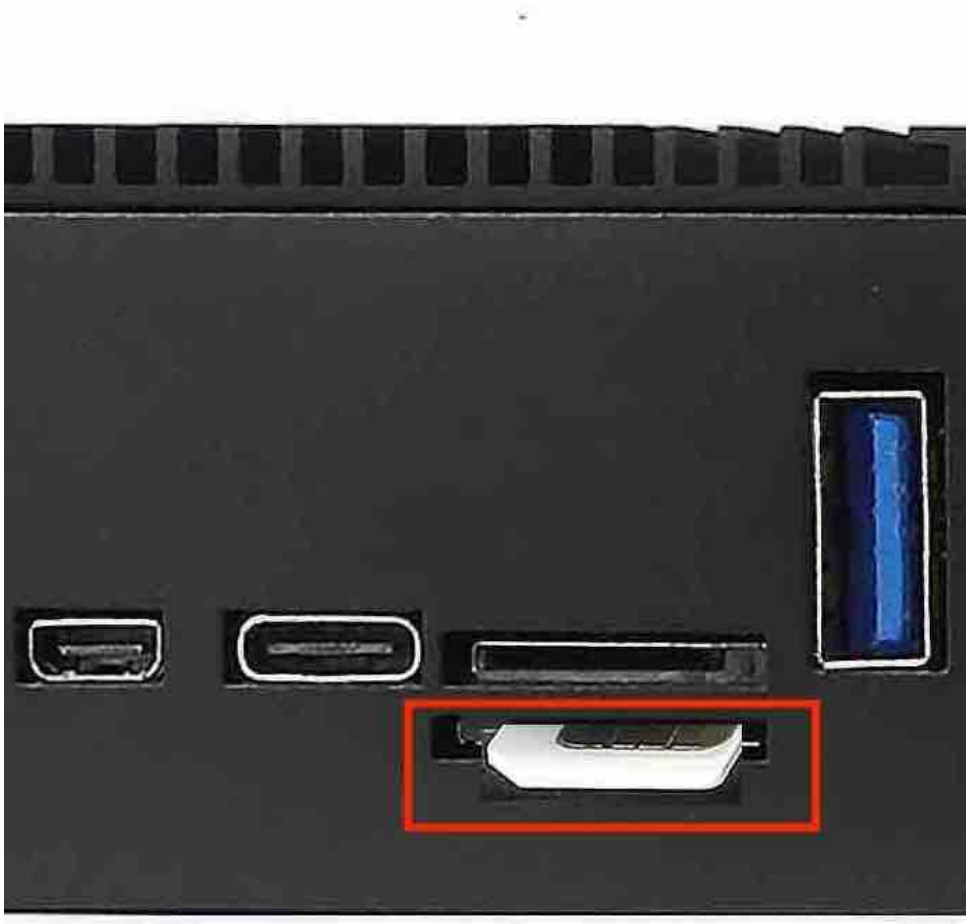

SIM Card Direction

Figure 939: *3G/4G/LTE Module*

Figure 940: *SIM Card Holder and 3G/4G/LTE Antenna*

Attention

The product does not come shipped with the 3G/4G/LTE module by default. If you need to use 3G/4G/LTE, you can contact us when placing an order, we can install the necessary hardware for you.

Zigbee Module

The CS-CM4-BOX industrial Pi PC supports an onboard Zigbee module. The Zigbee controller is TI CC2531, and the Raspberry Pi forum supports it.

For CS-CM4-BOX, there is a connector on the backside of the case that you can use to connect the external Zigbee antenna, as described in the figure below. If you need to use WiFi/BT and Zigbee together, we can customized the case and add another SMA connector for you, usually across the rear to the opposite of the current SMA.

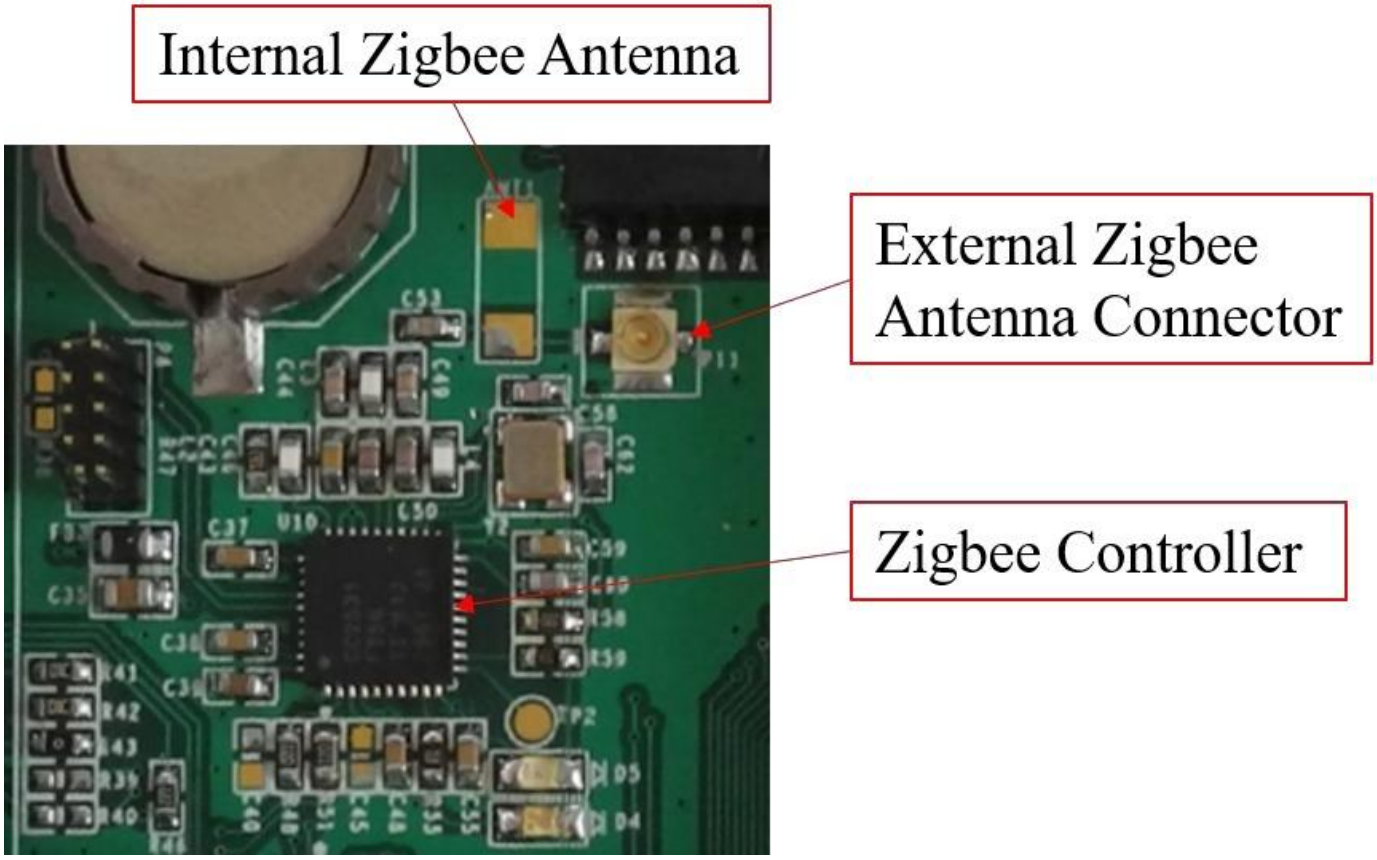

Figure 941: *Zigbee controller*

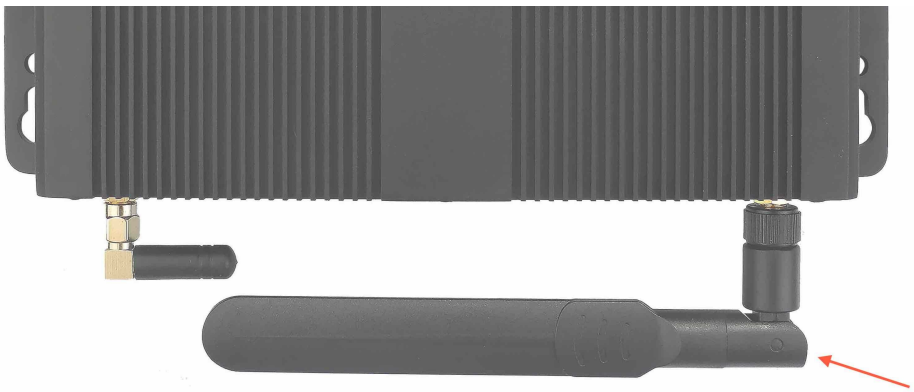

Zigbee Antenna

Attention

The product does not come with the Zigbee module by default.

Camera Connector

The CS-CM4-BOX industrial Pi PC has a 15 Pin **Camera Connector**, as shown in the figure below. The camera signals come from CAM1. The table below gives details about the definition of every Pin.

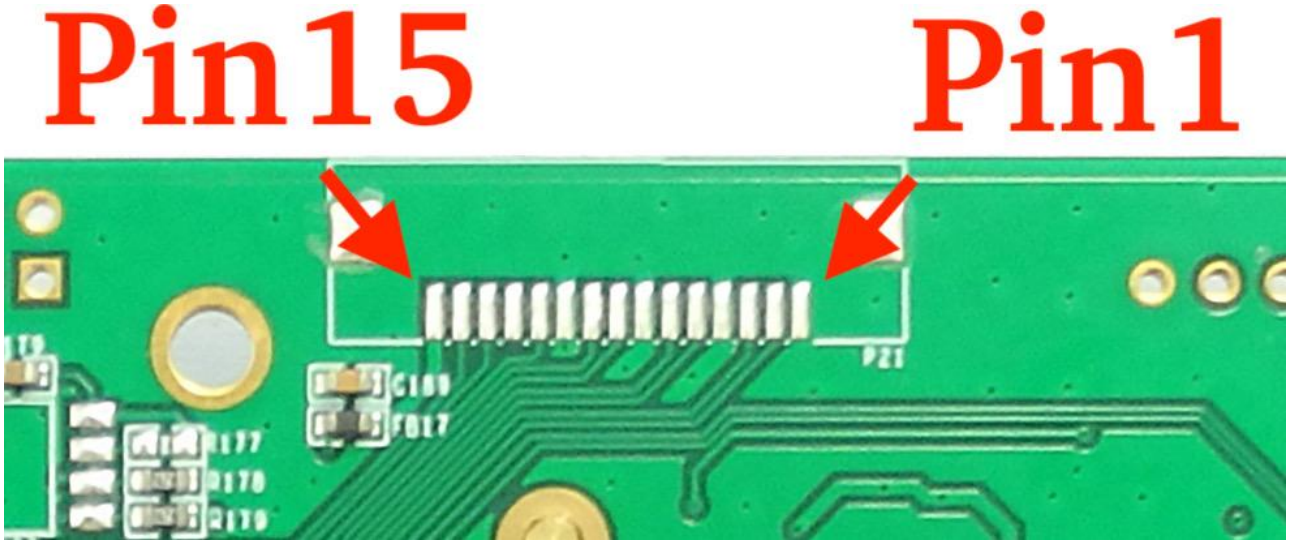

Camera Connector

Camera Connector Pin Definition:		
Pin Number	**Definition**	**Description**
Pin 1	GND	Power Ground
Pin 2	CAM1_DN0	CAM1_DN0
Pin 3	CAM1_DP0	CAM1_DP0
Pin 4	GND	Power Ground
Pin 5	CAM1_DN1	CAM1_DN1
Pin 6	CAM1_DP1	CAM1_DP1
Pin 7	GND	Power Ground
Pin 8	CAM1_CN	CAM1 Clock signal Negative
Pin 9	CAM1_CP	CAM1 Clock signal Positive
Pin 10	GND	Power Ground
Pin 11	CAM GPIO	CAM GPIO, use for disable camera power and module
Pin 12	NC	Not connected
Pin 13	SCL0	CPU I2C SCL0 signal
Pin 14	SDA0	CPU I2C SDA0 signal
Pin 15	+3.3V	System +3.3V Power Output, No more than 500mA Current output

Table 469 Camera Connector Pin-out

Attention

1. The camera connector is supported but not mounted by default. It's available on the PCB but not exposed on the case, please contact us when placing an order if you need to use camera on the CS-CM4-BOX.

TF Card Slot

The CS-CM4-BOX industrial Pi PC features 1 x **TF Card (micro SD) slot**. A slot can address up to 128GB of memory.

TF (micro SD) Card Slot

Attention

1. The SD is used only for the Lite version of Compute Module 4 that has no internal eMMC, it **can** be used to boot system. If you use CM4 with eMMC, this SD will be disabled.
2. The SD **can't** be used for storage extension.
3. The product does not come shipped with the TF card by default.

Audio Connectors

The CS-CM4-BOX industrial Pi PC features some audio peripherals. It has 1 x **3.5mm audio output jack**.
Also, the CS-CM4-BOX industrial Pi PC has a miniature 2W internal speaker for audio reproduction, as well as a small buzzer for alarm/notification sounds.

Audio Connector

Attention

By plugging in the headphone cable, the internal speaker will be disabled automatically.

PROG Button

The CS-CM4-BOX industrial Pi PC has one button for entering usb download mode, as shown in the figure below.
When booting **with** the button being pressed, the Raspberry Pi will boot from the USB connector. You can use this feature to download the OS software to the internal eMMC.
When booting **without pressing** the button, the Raspberry Pi will boot from the internal eMMC.

There is no need to press the button during regular operation. However, if you need to reinstall the OS, please refer to the detailed information on how to reflash the OS from the Software Documentation.

PROG Button

Mounting Procedure

You can mount CS-CM4-BOX with VESA mounting (guide): **75 x 75** mm, 4 x **M4** (6mm) screws.

You can also mount CS-CM4-BOX with rear mounting method (guide).

> **Attention**
>
> Please make sure the display is not exposed to high pressure when mounting into an enclosure.

Mechanical Specifications

CS-CM4-BOX

For CS-CM4-BOX, the outer mechanical dimensions are 209 x 125 x 37.3mm (W x L x H).

Please refer to the technical drawing in the figure below for details related to the specific product measurements.

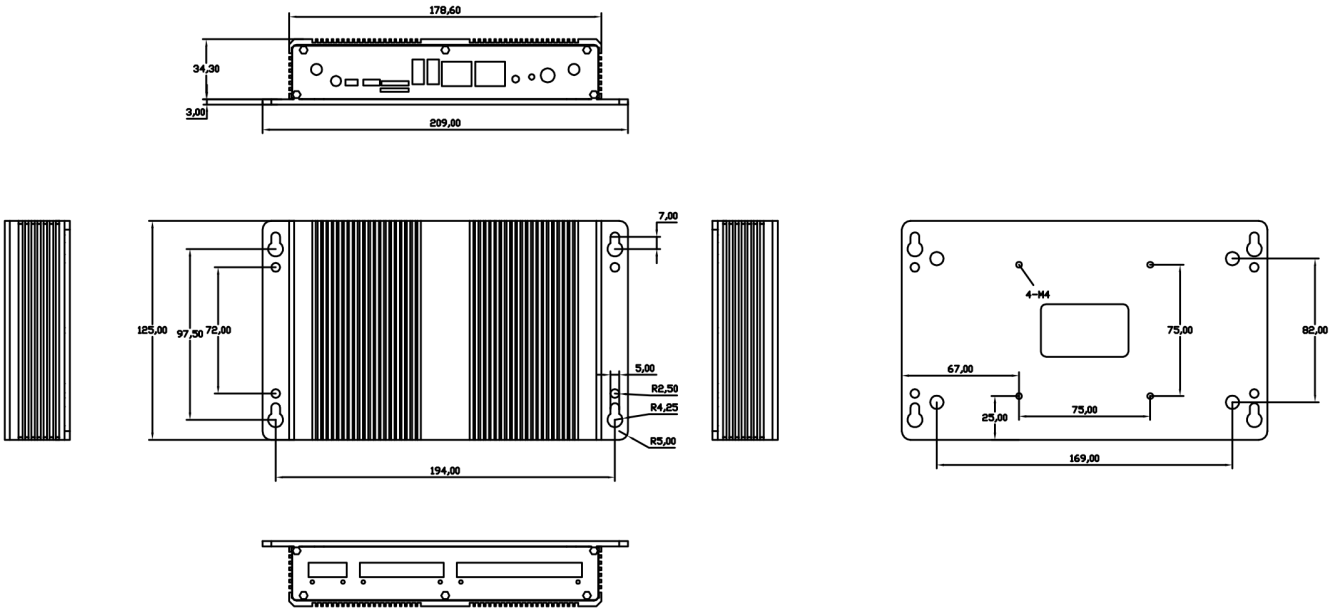

Figure 942: CS-CM4-BOX *Technical Drawing*

Disclaimer

This document is provided strictly for informational purposes. Its contents are subject to change without notice. Chipsee assumes no responsibility for any errors that may occur in this document. Furthermore, Chipsee reserves the right to alter the hardware, software, and/or specifications set forth herein at any time without prior notice and undertakes no obligation to update the information contained in this document.

While every effort has been made to ensure the accuracy of the information contained herein, this document is not guaranteed to be error-free. Further, it does not offer any warranties or conditions, whether expressed orally or implied in law, including implied warranties and conditions of merchantability or fitness for a particular purpose. We specifically disclaim any liability with respect to this document, and no contractual obligations are formed either directly or indirectly by this document.

Despite our best efforts to maintain the accuracy of the information in this document, we assume no responsibility for errors or omissions, nor for damages resulting from the use of the information herein. Please note that Chipsee products are not authorized for use as critical components in life support devices or systems.

Technical Support

If you encounter any difficulties or have questions related to this document, we encourage you to refer to our other documentation for potential solutions. If you cannot find the solution you're looking for, feel free to contact us. Please email Chipsee Technical Support at **support@chipsee.com**, providing all relevant information. We value your queries and suggestions and are committed to providing you with the assistance you require.