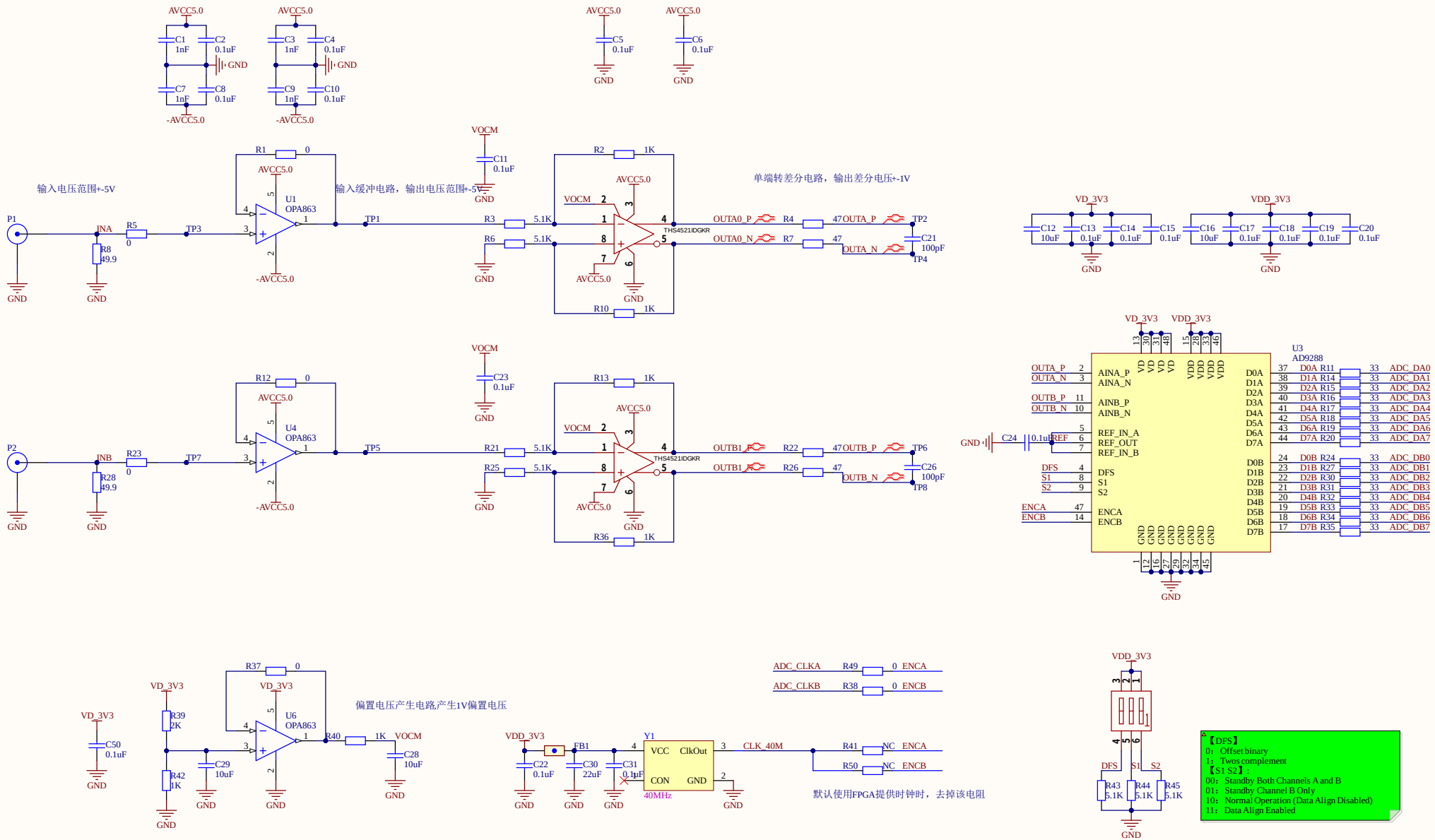

Title		
Size A3	Number	Revision
Date: 1/18/2025	Sheet of	
File: D:\BaiduSyncdisk\..\AD9288Module.SchDoc	Drawn By:	

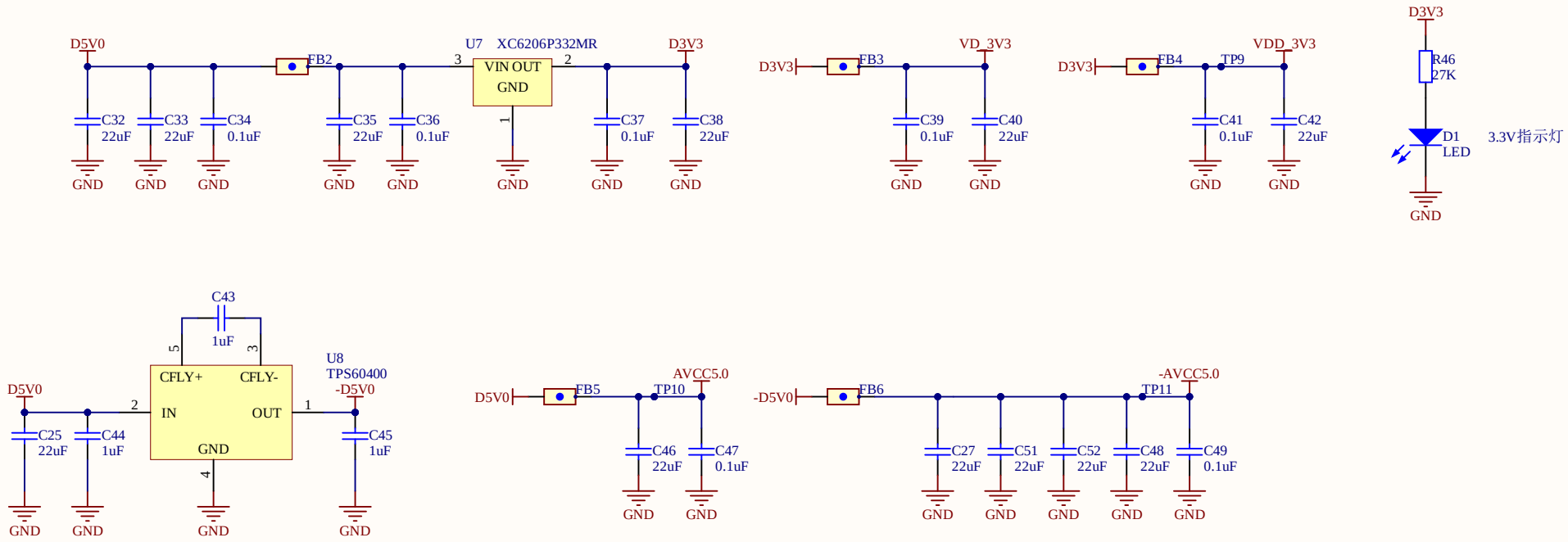

Title		
Size A4	Number	Revision
Date: 1/18/2025		Sheet of
File: D:\BaiduSyncdisk\..\Power.SchDoc		Drawn By:

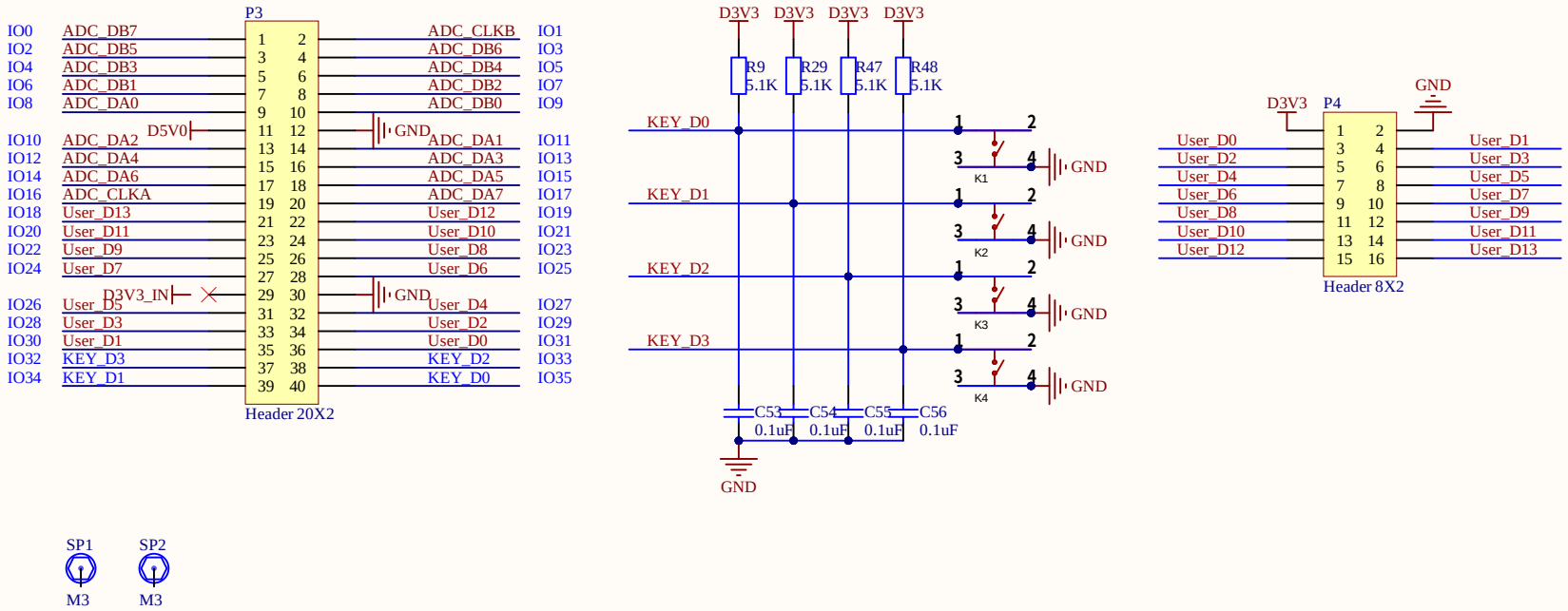

Title		
Size A4	Number	Revision
Date: 1/18/2025		Sheet of
File: D:\BaiduSyncdisk\..\Interface.SchDoc		Drawn By: