AMRITA VISHWA VIDYAPEETHAM
DEEMED TO BE UNIVERSITY UNDER SECTION 3 OF UGC ACT, 1956
SCHOOL OF ENGINEERING COIMBATORE
Department of Electronics and Communication Engineering

B.Tech-ECE
23ECE385 |Open Laboratory - II

CB.EN.U4ECE23212 – Chittesh S
CB.EN.U4ECE23246 – Sricharan R P
CB.EN.U4ECE23249 – Sujith Krishna P G

DIGITAL LOCKING SYSTEM WITH UNAUTHORIZED ACCESS ALERT

Problem Statement

In everyday life, people rely on locks to secure homes, offices, and personal belongings. Traditional mechanical locks face issues such as key loss, duplication, and wear-and-tear, making them less reliable. Commercial digital locks often depend on microcontrollers, which increase cost and complexity.

The challenge is to design and implement a **digital locking system** that is secure, customizable, and low-cost, built entirely with discrete digital logic ICs.

The system must achieve the following:
- **Password Entry & Storage**
- **Verification & Authentication**
- **Access Control**
- **Security Alert**
- **Reset Option**

The main challenge is integrating input handling, storage, authentication, and output control solely through gate-level logic, ensuring a solution that is robust, affordable, and practical for real-world security needs.

Methodology

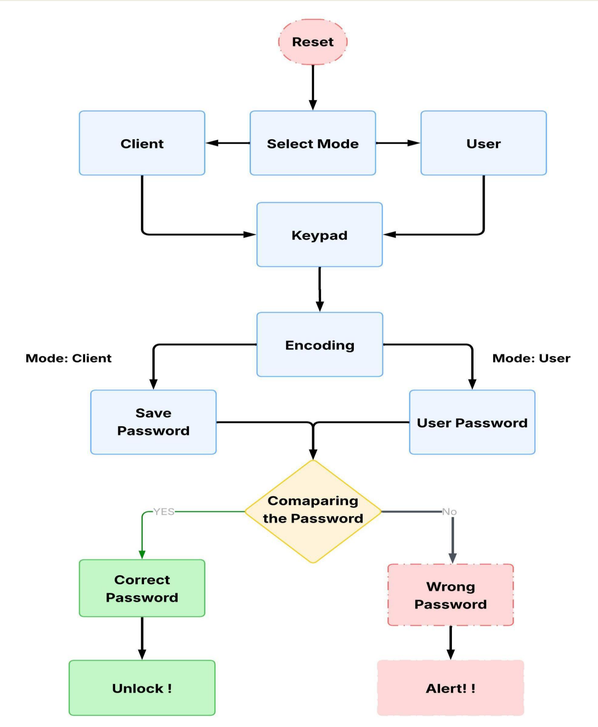

Fig.1 Block Diagram

Simulation Results

Correct Password:

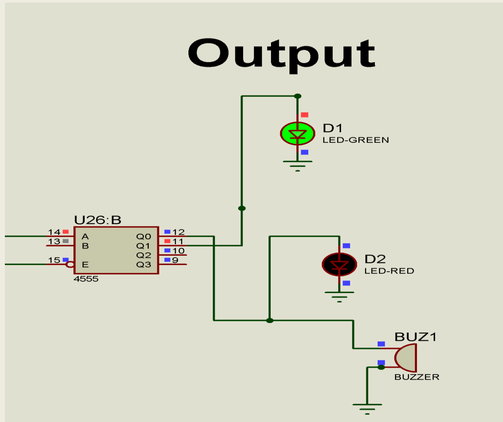

Fig.3 Green LED for password match

Incorrect Password:

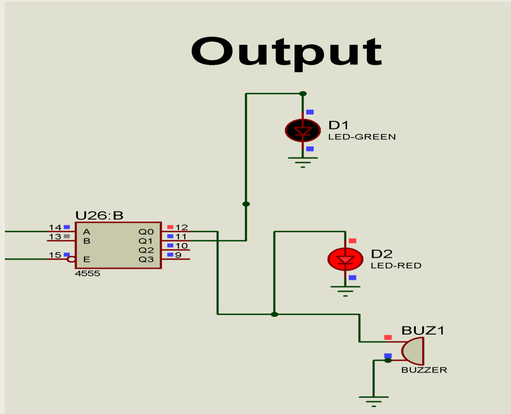

Fig.4 Red LED for password mismatch

Working Model Picture

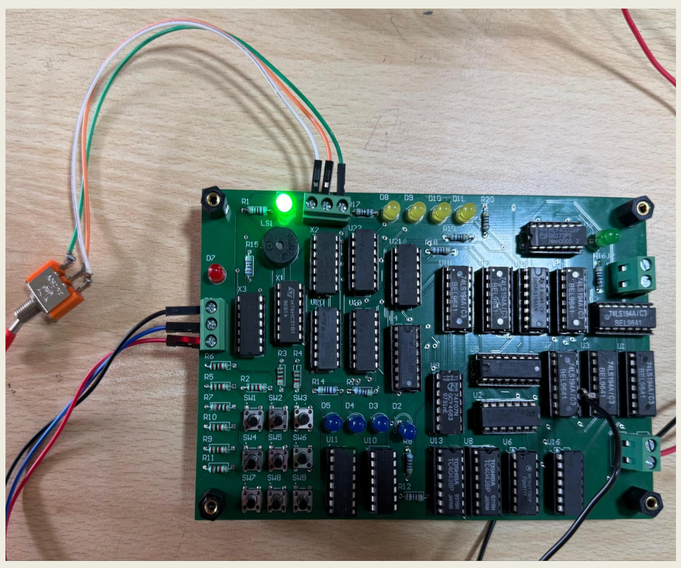

Fig.5 Reset switch triggered with corresponding green LED indication

PCB Layout

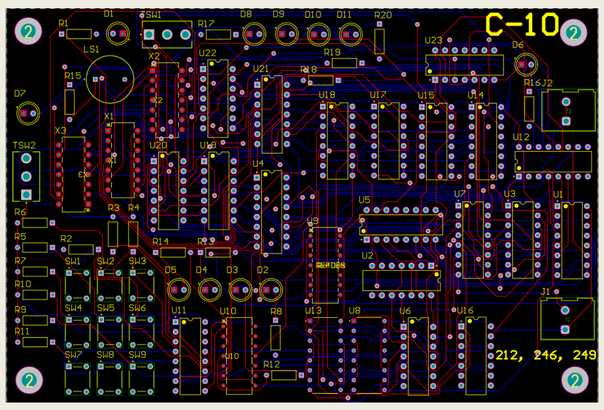

Fig.6 Double-layer PCB diagram of the system.

Results

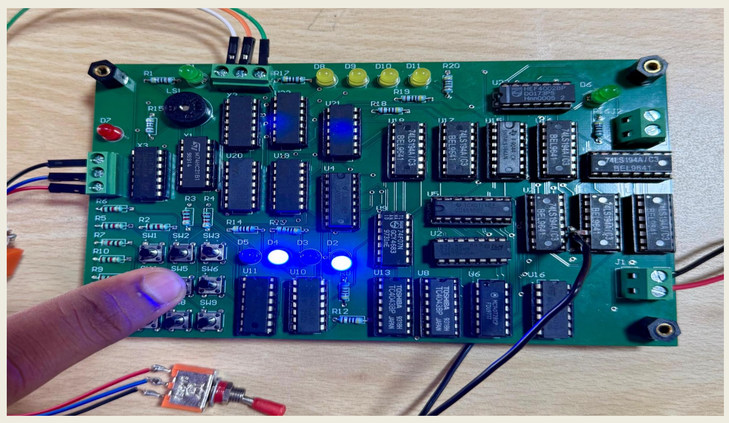

Fig.7 Decimal input '5' and its corresponding binary representation shown by blue LEDs

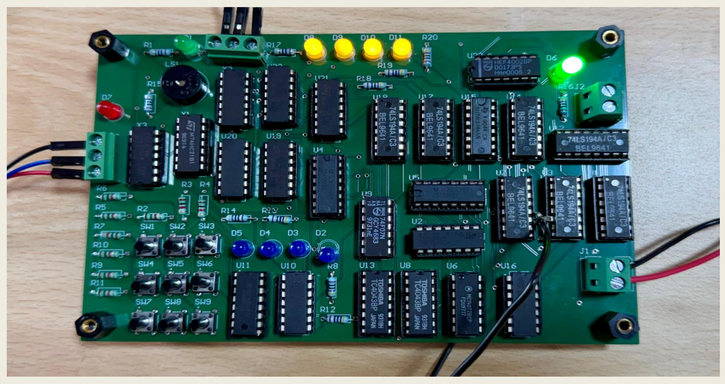

Fig.8 Green LED indicating successful authentication

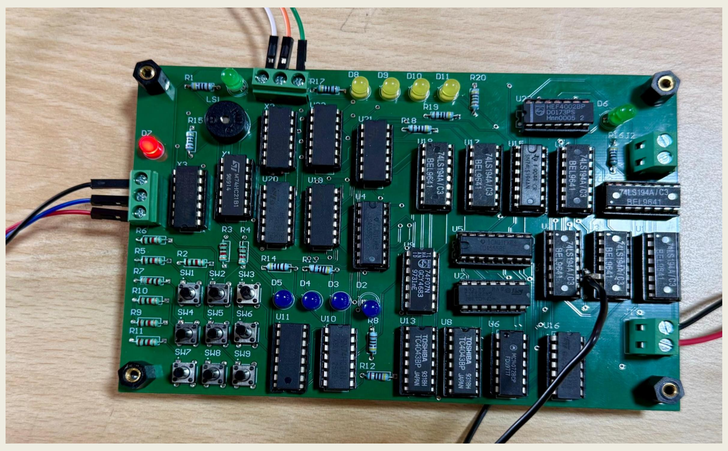

Fig.9 Red LED indicating failed authentication

Circuit Diagram

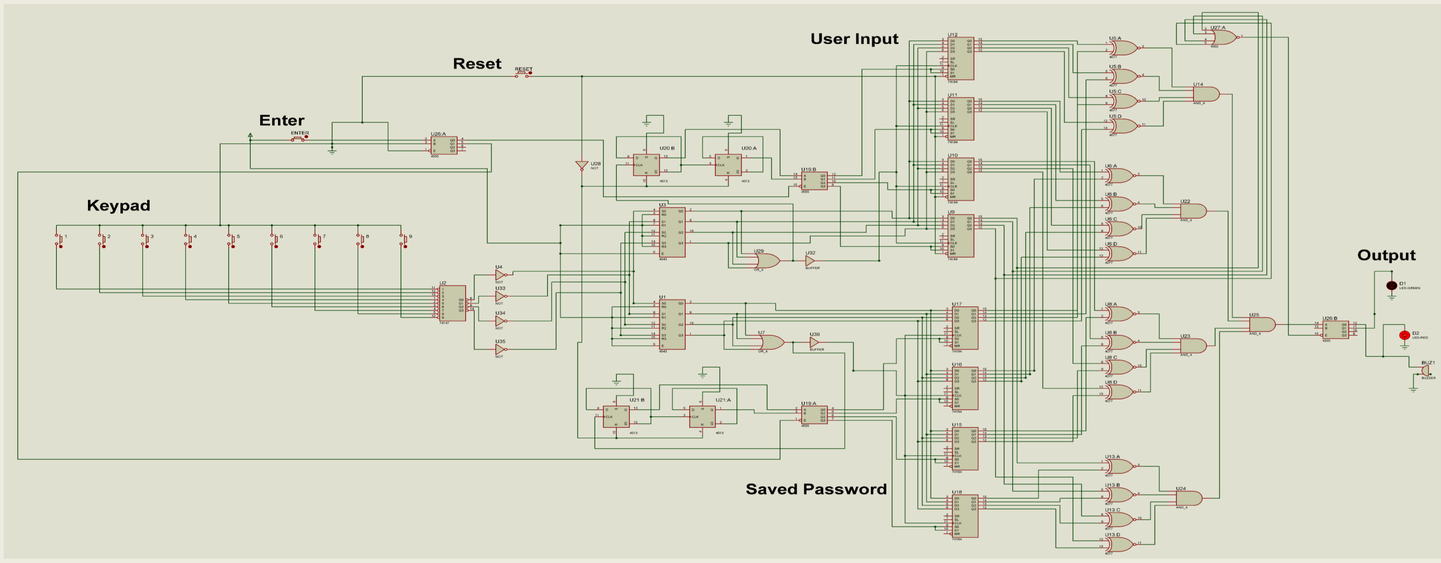

Fig.2 Schematic Diagram

References

[1] A. Ibrahim, A. Paravath, P. K. Aswin, S. M. Iqbal and S. U. Abdulla, "GSM Based Digital Door Lock Security System," Proc. 2015 IEEE International Conference on Power, Instrumentation, Control and Computing (PICC), 2015, pp. 1–6, doi: 10.1109/PICC.2015.7455796.

[2] Y. Yu, "A Practical Digital Door Lock for Smart Home," Proc. 2018 IEEE International Conference on Consumer Electronics (ICCE), Jan. 2018, pp. 1–2, doi: 10.1109/ICCE.2018.8326305.

[3] "The Design and Construction of a 2-Digit Electronic Lock System Using Simple Circuit Elements and Digital Electronic Logic Gates," ResearchGate, Mar. 15, 2017. [Online]. Available: https://www.researchgate.net/. Accessed: Mar. 2, 2026.

[4] "Simple Combination Lock," All About Circuits. [Online]. Available: https://www.allaboutcircuits.com/textbook/experiments/chpt-7/simple-combination-lock/. Accessed: Mar. 2, 2026.

[5] "Electronic Code Lock System Using IC," Instructables. [Online]. Available: https://www.instructables.com/Electronic-Code-Lock-System-Using-IC/. Accessed: Mar. 2, 2026