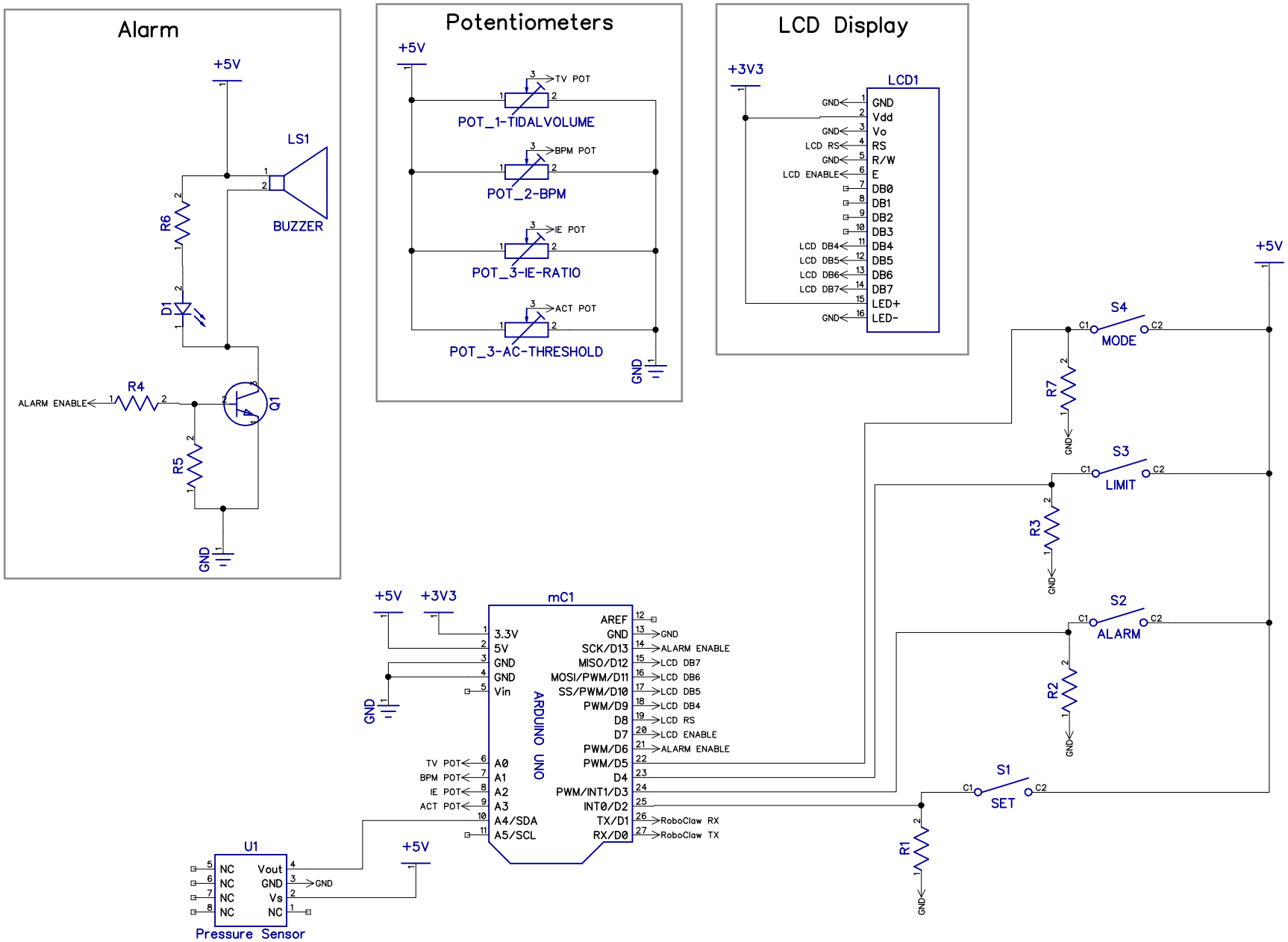
Alarm
+5V
LS1
BUZZER
R6
D1
R4
ALARM ENABLE
Q1
R5
GND
Potentiometers
+5V
TV POT
POT_1-TIDALVOLUME
BPM POT
POT_2-BPM
IE POT
POT_3-IE-RATIO
ACT POT
POT_3-AC-THRESHOLD
GND
LCD Display
+3V3
LCD1
GND
Vdd
Vo
RS
R/W
E
DB0
DB1
DB2
DB3
DB4
DB5
DB6
DB7
LED+
LED-
LCD RS
LCD ENABLE
LCD DB4
LCD DB5
LCD DB6
LCD DB7
+5V
S4
MODE
R7
S3
LIMIT
R3
S2
ALARM
R2
S1
SET
R1
+5V
+3V3
mC1
3.3V
5V
GND
GND
Vin
A0
A1
A2
A3
A4/SDA
A5/SCL
ARDUINO UNO
AREF
GND
SCK/D13
MISO/D12
MOSI/PWM/D11
SS/PWM/D10
PWM/D9
D8
D7
PWM/D6
PWM/D5
D4
PWM/INT1/D3
INT0/D2
TX/D1
RX/D0
ALARM ENABLE
LCD DB7
LCD DB6
LCD DB5
LCD DB4
LCD RS
LCD ENABLE
ALARM ENABLE
RoboClaw RX
RoboClaw TX
TV POT
BPM POT
IE POT
ACT POT
GND
U1
NC
NC
NC
NC
Vout
GND
Vs
NC
Pressure Sensor
+5V