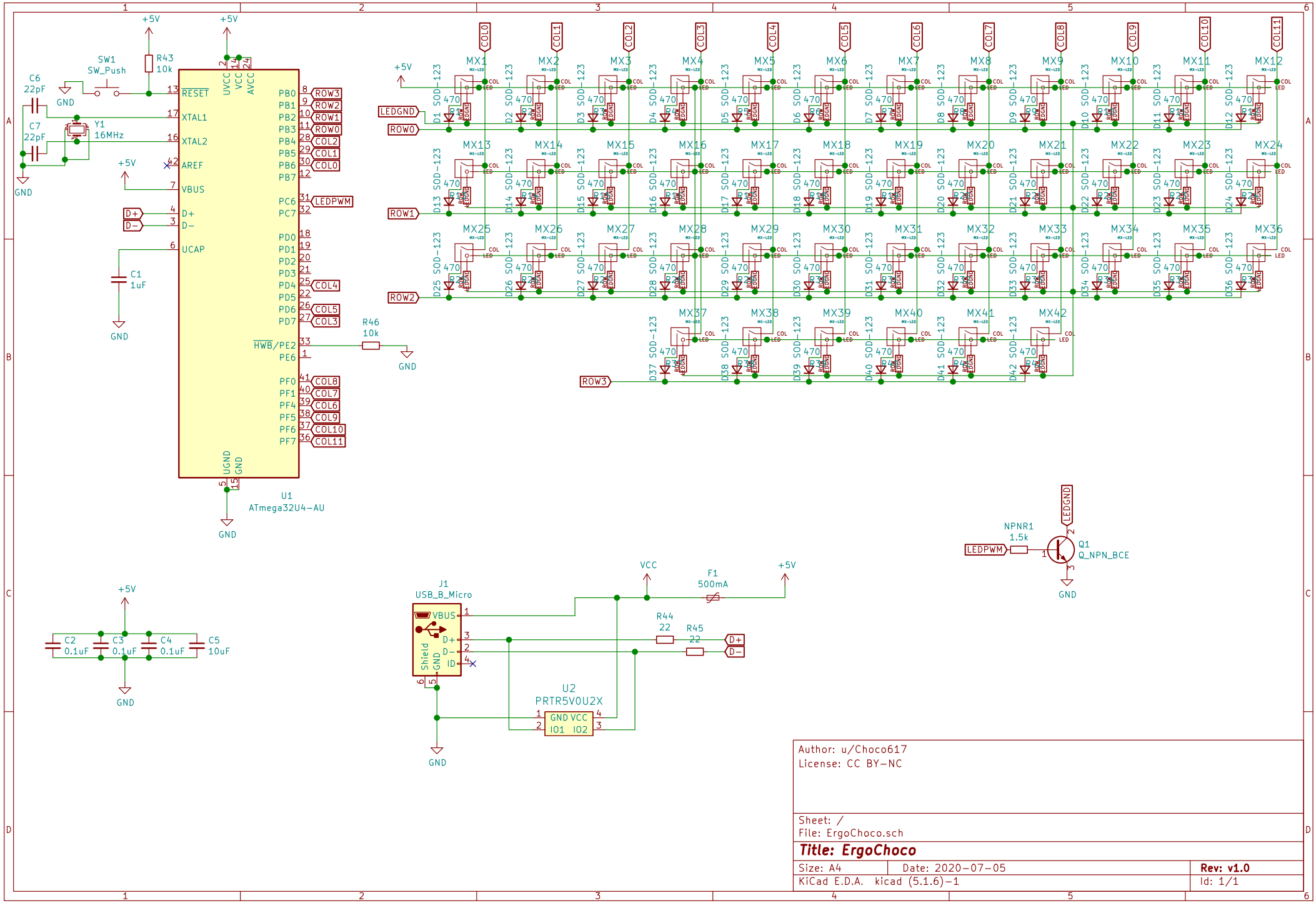

Author: u/Choco617
License: CC BY-NC

Sheet: /
File: ErgoChoco.sch

Title: ErgoChoco

Size: A4	Date: 2020-07-05	**Rev: v1.0**
KiCad E.D.A. kicad (5.1.6)-1		Id: 1/1