Critical Design Report

Regenerative Cooling Liquid Rocket Engine

Version 1.0 – Revised 04/05/2020

Authors:

Alexia Louis

Brandon Sheehan

Christopher Henderson

Eric Aguilar

NOMENCLATURE

CAD: Computer Aided Design

PDR: Preliminary Design Review

CDR: Critical Design Review

WBS: Work Breakdown Structure

FEA: Finite Element Analysis

FEM: Finite Element Modeling

SAR: Systems Acceptance Review

SOW: Statement of Work

Isp: Specific Impulse

NASA CEA: NASA Chemical Equilibrium Analysis

RPA: Rocket Propulsion Analysis

SRD: Systems Requirements Document

SRR: Systems Requirements Review

TCD: Test Control Document

IAW: In Accordance With

TMR: Total Momentum Ratio

BF: Blockage Factor

SR: Skip Ratio

TPM: Technical Performance Measures

V&V: Verification & Validation

ANSYS: Analysis System

RPE: Rocket Propulsion Elements

Executive Summary

In our Critical Design Report, we will discuss the design process from our Systems Requirements Review to our Critical Design. We will explain how our main customer requirements decompose to engineering requirements and how they transfer to and define our subsystems. Along with the identification of our subsystems, we will also illustrate how our design was created through mathematical iterations used to obtain desired parameters and trade studies conducted during the selection process of our subsystems. First the design will be addressed on the system level and subsequently the subsystems will be addressed. This includes scope, requirements, system overview, design methodology, and verification methods.

Table of Contents

Executive Summary **2**

Scope **5**
- Identification 5
- System Overview 5

Applicable documents **5**
- Government documents 5
- Non-government documents 5

System **6**
- Definitions 6
- Characteristics 6
  - Performance 6
  - External interface characteristics 6
  - Physical Characteristics 7
  - Other characteristics 8
- Design 8
  - Design approach 8
- Assumptions 8
  - Analysis tools 9
  - Trade studies and selection 9
- Verification 9

Injector **10**
- Definitions 10
- Characteristics 11
  - Performance 11
  - External interface characteristics 11
  - Physical characteristics 12
  - Other characteristic 13
- Design 13
  - Design approach 13
  - Analysis tools 13
  - Trade studies 13
- Verification 14

Thrust Chamber **16**
- Definitions 16

Characteristics 17
Performance 17
External interface characteristics 17
Physical characteristics 17
Other characteristics 17
Design 18
Design approach 18
Analysis tools 18
Verification 19

Cooling System . 19
Characteristics 19
Performance 19
External interface characteristics 19
Physical characteristics 19
Other characteristics 19
Design 20
Design approach 20
Analysis tools 20
Trade studies 20
Verification 20

Test Stand 21
Definitions 21
Characteristics 22
Performance 22
The test stand structure is able to withstand the 10,000 Newtons of thrust produced by the engine with a factor of safety of 7.19. 22
External interface characteristics 22
Physical characteristics 23
Other characteristics 29
Design 29
Design approach 29
Analysis tools 29
Trade studies 30
Verification: 31

Appendices 32
Individual Contribution 32
Glossary 32
Others 35

1. Scope

1.1. Identification

To design an engine that can produce 10,000N of thrust and can withstand multiple launches by reducing heat loss in the combustion chamber and maintaining geometric integrity throughout the engine

1.2. System Overview

Regenerative methalox rocket engine that can be used for a minimum of two launches and consists of the following subsystems:

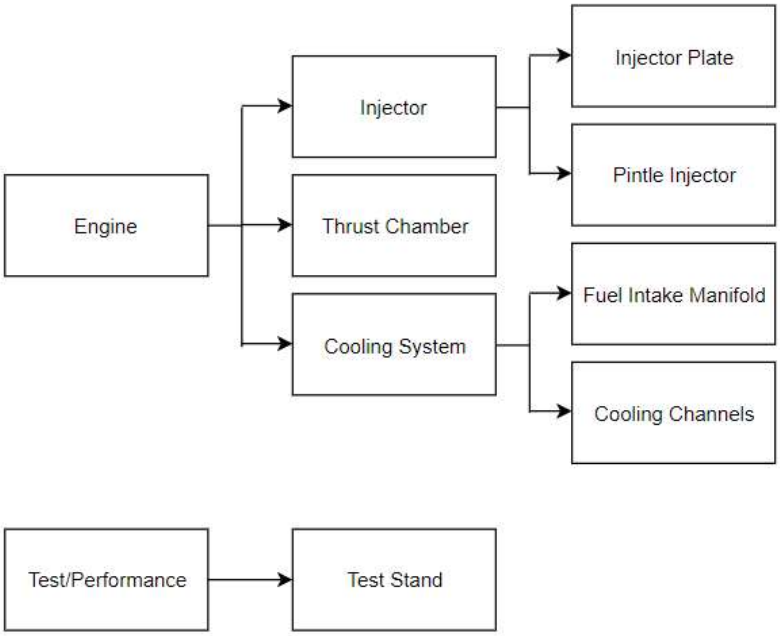

Figure 1. System Definition

2. Applicable documents

2.1. Government documents

eCFR - Code of Federal Regulations. (n.d.). Retrieved October 31, 2019, https://www.ecfr.gov/cgi-bin/text-idx?gp=&SID=1f58495405665a030c05e44bca5a8591&mc=true&tpl=/ecfrbrowse/Title14/14chapterIII.tpl.

2.2. Non-government documents

Humble, R. W., Henry, G. N., & Larson, W. J. (2007). Space propulsion analysis and design. New York: McGraw-Hill. Florence, OR.

Krzycki, L. J. (1967, March). *How to Design, Build and Test Small Liquid-Fuel Rocket Engines.* Retrieved from http://risacher.org/rocket/

Sutton, G. P., & Biblarz, O. (2017). Rocket propulsion elements. Hoboken, NJ:

John Wiley & Sons Inc.
Twichell, S.E. (1976, December 01). *Solid Rocket Motor Internal Insulation.* Retrieved from https://ntrs.nasa.gov/search.jsp?R=19770023227
Ulas, A. (2013, February). Numerical Analysis of Regenerative Cooling in Liquid
"P&ID Diagram - Online Drawing Tool." *Engineering ToolBox*, www.engineeringtoolbox.com/p-id-drawing-d_1639.html.
Tang, Liam, et al. "P&ID Symbols (Complete List & PDF)." *Projectmaterials*, 23 Jan. 2020, blog.projectmaterials.com/instrumentation/pid-symbols/.
"Helium versus Nitrogen." *Copenhagen Suborbitals*, 24 Oct. 2016, copenhagensuborbitals.com/helium-versus-nitrogen/.
How to Control a Solenoid Valve with Arduino, 30 Aug. 2019, circuitdigest.com/microcontroller-projects/how-to-control-solenoid-valve-using-arduino.

3. System

3.1. Definitions

3.1.1. Static Force Simulation: Simulation with static forces and no moving components. Comprised of applied forces and reaction forces
3.1.2. Isp (Specific Impulse): Total impulse per unit of propellant [seconds]
3.1.3. O/F: Oxidizer to Fuel mass ratio
3.1.4. Axisymmetric: Symmetric about an axis

3.2. Characteristics

3.2.1. Performance

Volume	979.909 cm^3
Length	383.748 mm
Thrust	10,000N
Material	Inconel 718
Isp	301s (Vac)

Table 1. System Performance and Characteristics

3.2.2. External interface characteristics

3.2.2.1. Propulsion System
3.2.2.1.1. Valves
3.2.2.1.1.1. High pressure cryogenic rated valves
3.2.2.1.2. Bolts/Nuts
3.2.2.1.2.1. High strength metric class 10.9 Zinc Yellow-Chromate plated Hex screw
3.2.2.1.2.1.1. Length = 30mm
3.2.2.1.2.1.2. Head Diameter = 13mm
3.2.2.1.2.1.3. Head Height = 5.3mm

3.2.2.1.2.2. Metric fine-thread medium strength steel hex class 8
3.2.2.1.2.2.1. Pitch = 1mm
3.2.2.1.2.2.2. Width = 13mm
3.2.2.1.2.2.3. Height = 6.5mm
3.2.2.1.3. Hoses
3.2.2.1.3.1. Fuel tank to inlet manifold
3.2.2.1.3.2. LOx tank to pintle body
3.2.2.2. Gimbal Mount
3.2.2.2.1. Rotating on two dimensional axis

3.2.3. Physical Characteristics

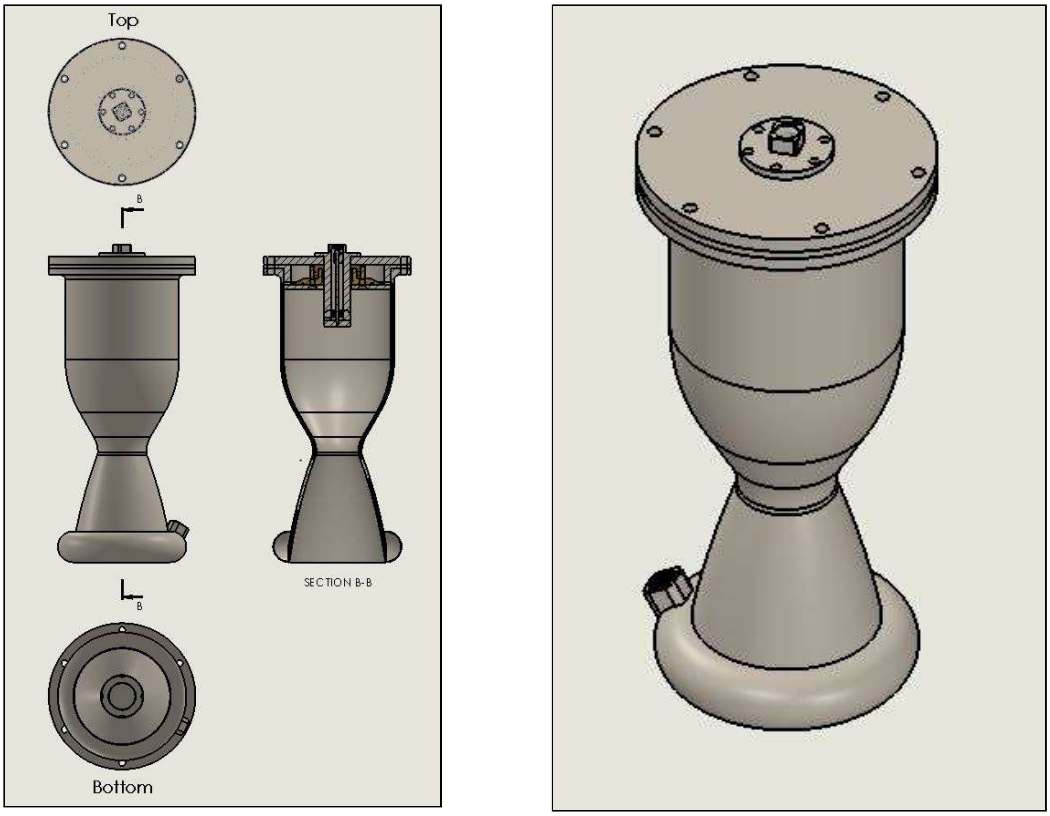

Figure 2. Engine Drawing

Subsystem	CDR Mass %	CDR [kg]	PDR Mass %	PDR [kg]	SRR Mass %	SRR [kg]
Injector	1.715	4.1829	1.5876	3.091	10	1.5
Thrust Chamber	1.3758	3.3554	1.2696	2.472	60	9
Cooling System (Manifold)	.0778	0.18963	0.0977	0.1902	10	1.5
Test Stand	96.4205	235.16	89.4161	174.086	N/A	N/A
Total Allocated	99.59	242.89	92.5924	180.27	100	15
Margin	0.41	1	7.4076	14.422	0	0
System Total	100	243.89	100	194.692	100	15

Table 2. System Mass Distribution

3.2.4. Other characteristics

3.2.4.1. Reliability

3.2.4.1.1. Maintainability

3.2.4.1.1.1. Engine designed such that components are easily removable for inspection and replacement

3.3. Design

3.3.1. Design approach

3.3.1.1. Design Methodology

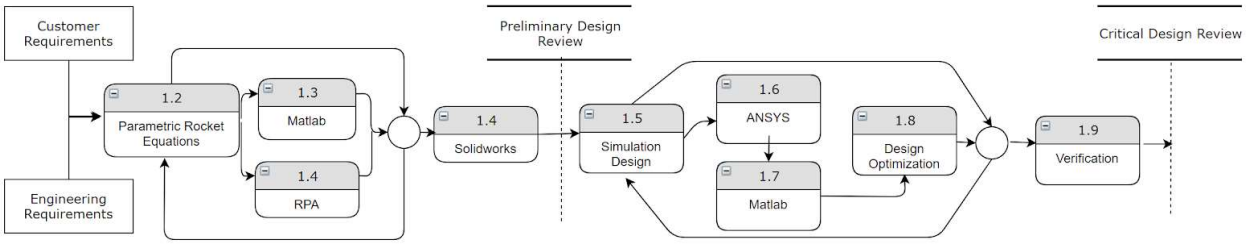

As previously mentioned in our Preliminary Design Report, the parametric rocket design equations (Appendix 3a.) were used to obtain the engine's performance characteristics. These parameters were then programmed into RPA to generate a geometric contour of the regenerative engine and cross sectional area along the cooling channels. With these geometric parameters, we then used SolidWorks to fully design the engine. From there, simulation geometry and plan was created using Solidworks and ANSYS. Simulations were performed in an iterative method to find simulated exhaust velocity in ANSYS Fluent. The exhaust velocity results from Fluent were imported into Matlab to verify the thrust, Isp, and mass flow rates.

3.3.1.2. Design Parameters

3.3.1.2.1. Assumptions

- 3.3.1.2.1.1. Ideally Expanded Nozzle
- 3.3.1.2.1.2. Incompressible Flow of Oxidizer and Fuel
- 3.3.1.2.1.3. Thermodynamic Isentropic Relations

3.3.1.2.2. Desired Parameters

- 3.3.1.2.2.1. Thrust: 10,000N
  - 3.3.1.2.2.1.1. From customer requirements
- 3.3.1.2.2.2. Chamber Pressure: 500psi
  - 3.3.1.2.2.2.1. From historical data of similar sized engines
- 3.3.1.2.2.3. O/F: 2.8
  - 3.3.1.2.2.3.1. Iterations of heat transfer capabilities of material and cooling system

3.3.2. Analysis tools

3.3.2.1. Rocket Propulsion Analysis (RPA)

- 3.3.2.1.1. Used to generate geometric properties of thrust chamber and cooling channels based on desired thrust, chamber pressure, and wall temperature
- 3.3.2.1.2. *Table of Results in Appendix 3b.

3.3.2.2. MatLab

3.3.2.2.1. Used to calculate injector geometric properties given desired performance parameters such as O/F ratio and chamber pressure

3.3.2.2.2. *Equations in Appendix 3c.

3.3.2.3. SolidWorks

3.3.2.3.1. Used for static force simulation

3.3.3. Trade studies and selection

Options		Methane		Kerosene		Liquid Hydrogen	
Categories	**Weight**	**Value**	**Score (Weight x Value)**	**Value**	**Score (Weight x Value)**	**Value**	**Score (Weight x Value)**
Specific Energy	5%	55.6 [MJ/kg]	2.78	46.2 [MJ/kg]	2.31	130.895 [MJ/kg]	6.54
Critical Pressure	85%	4.5992 [MPa]	3.91	2.4 [MPa]	2.04	1.3 [MPa]	1.11
Energy Density	10%	23 [MJ/L]	2.3	38 [MJ/L]	3.8	10 [MJ/L]	1
Total Score	100.00%	**8.99**		8.15		8.65	

Table 3. Fuel Trade Studies

3.4. Verification

3.4.1. Exhaust Velocity

3.4.1.1. Created axisymmetric planar profile of thrust chamber in SolidWorks to be imported into ANSYS. Defined boundary conditions and solved for exhaust velocity in ANSYS Fluent with 4500 iterations. From there, we exported results to Matlab to verify thrust, Isp, and mass flow rate

3.4.1.2. *ANSYS Simulation Report in Appendix 3d.

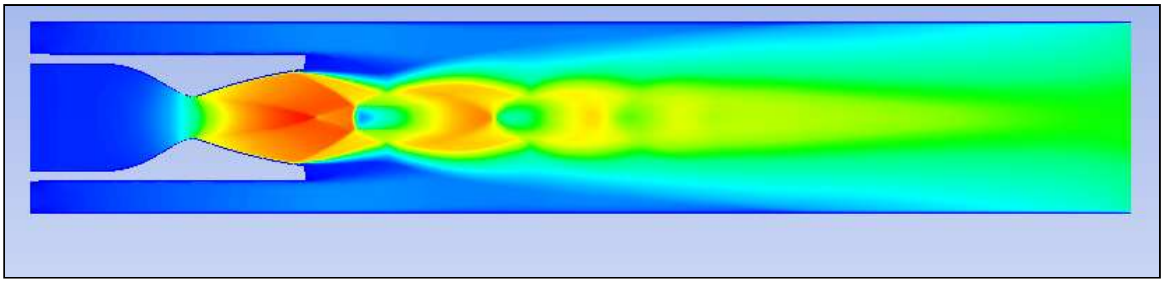

Figure 3. Exhaust Velocity Simulation

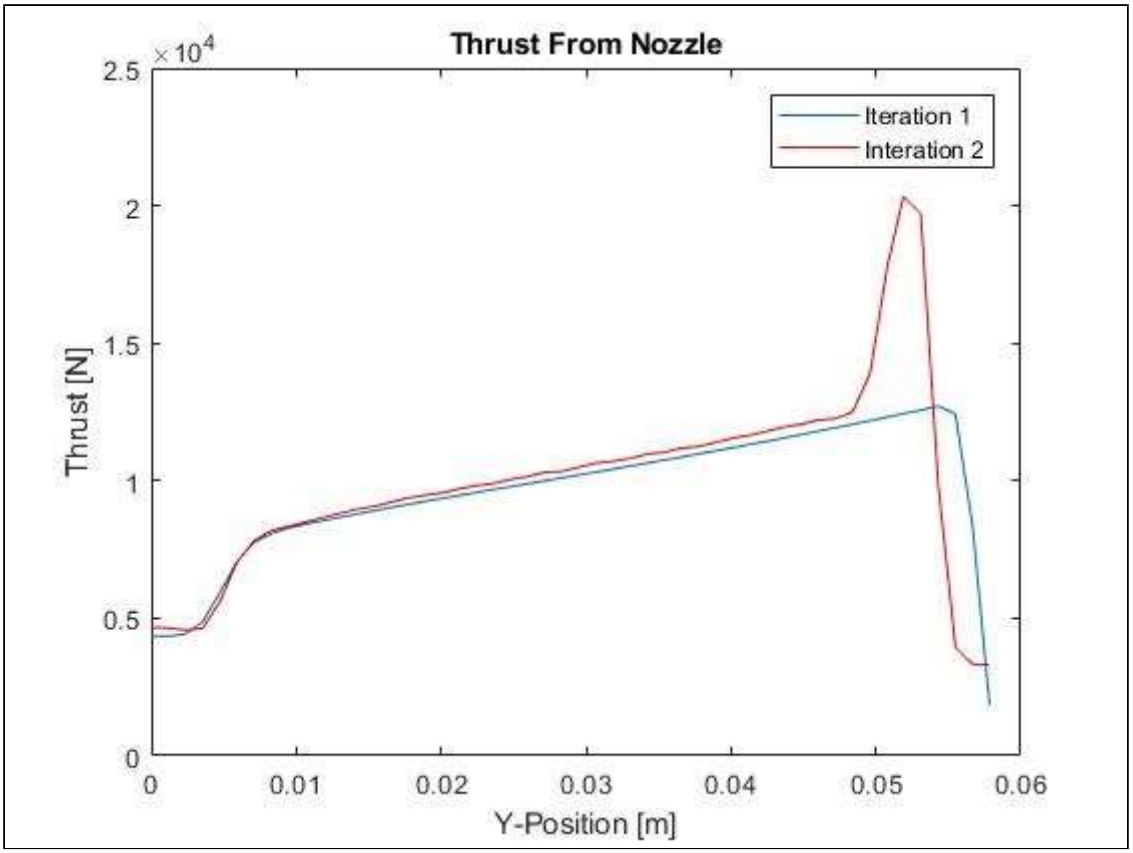

Figure 4. Thrust Verification

4. Injector

4.1. Definitions

4.1.1. Pintle: center component that injects liquid oxygen into the thrust chamber

4.1.1.1. Pintle Body: The main hollow cylinder that directs the flow of the liquid oxygen to the LOx ring for injection.

4.1.1.2. LOx Ring: slotted ring that changes the flow of the liquid oxygen and injects it at required velocities into the thrust chamber.

4.1.1.3. Skip Length Ratio: the ratio of how far the pintle body protrudes from the bottom of the injection plate into the thrust chamber measured to the top of the slots, to the diameter of the pintle body.

4.1.1.4. Blockage Factor (BF): The total width of the slots divided by the circumference of the tube As BF becomes less than one the collisional mixing is traded with interfacial or shear mixing (outer stream passing through gaps in the inner stream).

4.1.2. Injector plate: directs the flow of liquid methane fuel from the cooling channel to be injected into the thrust chamber through the fuel annulus.

4.1.2.1. Screen Ring: controls the velocity and stabilizes the flow of the fuel by forcing the fuel through a screen before reaching the fuel annulus for injection.

4.1.3. Total Momentum Ratio (TMR): TMR is the product of the mass flow rate and velocity of the inner flow divided by the mass flow rate and velocity of the outer flow.

4.2. Characteristics

4.2.1. Performance

4.2.1.1. Total Momentum Ratio: A TMR of 1 was selected based of existing designs and research papers

4.2.1.2. $TMR = \frac{\dot{m}_o v_o}{\dot{m}_f v_f}$

4.2.1.2.1. Injection Velocities

4.2.1.2.1.1. Fuel Velocity: 84.2144 [m/s]

4.2.1.2.1.2. Oxidizer Velocity: 30.1066 [m/s]

4.2.2. External interface characteristics

4.2.2.1. Fuel channel to Injector Plate interface

4.2.2.1.1. The injector plate mates into the thrust chamber and connects to the open fuel channels. Sealed by o-rings.

4.2.2.2. LOx Hose to Pintle Body interface

4.2.2.2.1. A half inch high pressure steel braided hose threads onto the top of the pintle body.

4.2.3. Physical characteristics

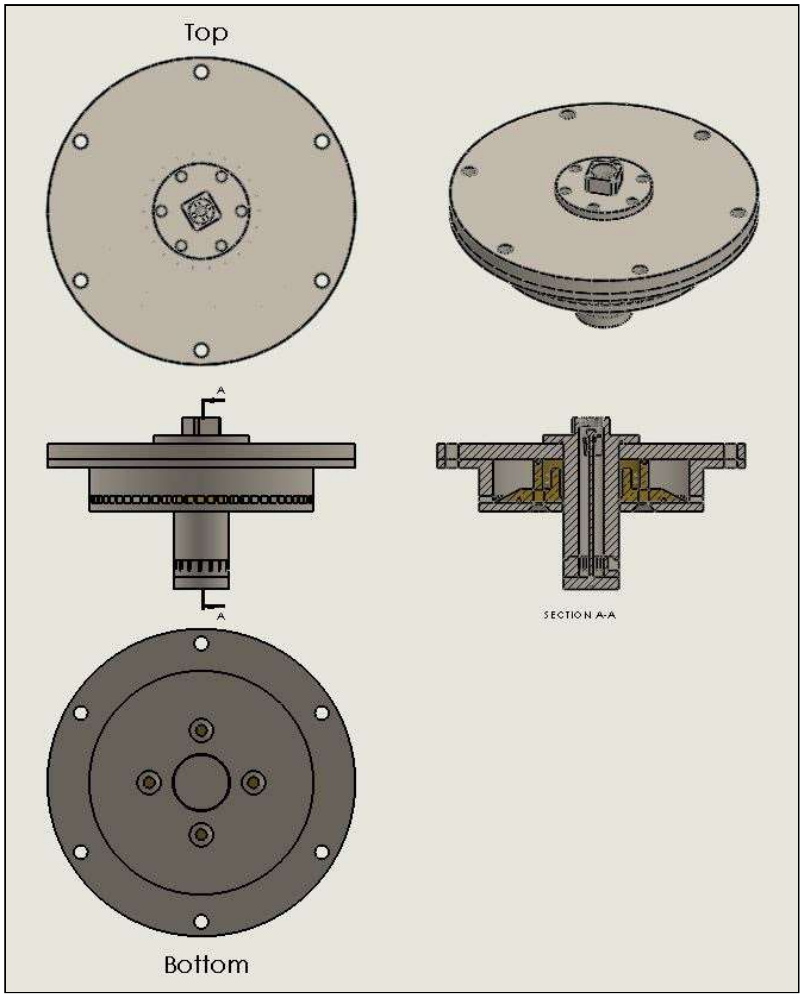

Figure 5. Injector Drawing

Components	Mass [kg]	Mass % (Overall)
Injector	**4.54854**	**100**
Pintle Body	**0.55132**	**12.121**
Pintle	0.44888	9.869
Pintle Rod	0.00580	0.128
LOx Ring	0.04975	1.094
Cap	0.04689	1.029
Injector Plate	**3.99722**	**87.879**
Cup	1.57515	34.629
Screen	0.60234	13.242
Lid	1.81973	40.007

Table 4. Injector Mass Distribution

4.2.4. Other characteristic

4.2.4.1. Reliability

4.2.4.1.1. Must be able to withstand multiple firings.

4.2.4.1.2. Maintainability: allow for inspection and maintenance. Injector is designed to allow for parts to be easily removed, inspected and if needed replaced.

4.3. Design

4.3.1. Design approach

4.3.1.1. With the selected O/F ratio and the mass flow rates for propellants, pintle design equations were used utilizing MatLab (Appendix 3c.) to find the injection velocities in order to get as close to the Total Momentum Ratio (TMR) of 1 and the proper pressure drops over the injector. Once suitable velocities were found the injection areas for the slotted ring and fuel anuluis were found. Taking into account pintle design parameters the overall dimensions were found and exported to Solidworks.

4.3.1.1.1. Design parameters

4.3.1.1.1.1. TMR = 1

4.3.1.1.1.2. Pressure drops = 7-15% minimum for safety

4.3.2. Analysis tools

4.3.2.1. MatLab

4.3.2.1.1. Used to calculate pressures throughout the injector to ensure that the liquid methane remained at a high enough pressure to remain in a liquid state.

4.3.2.1.1.1. Assumptions

4.3.2.1.1.1.1. Constant temperature of propellants through injector

4.3.2.1.1.1.2. Constant flow rate

4.3.2.1.1.1.3. Constant density through injector

4.3.2.2. RPA

4.3.2.2.1. Used to calculate the temperature of liquid methane at the injection plate to ensure it will remain in a liquid state.

4.3.3. Trade studies

4.3.3.1. Initial trade studies compared the pintle injector to coaxial swirl as well as a shower head type injector. Pintle was selected for its inherent combustion stability and reliability/ease of maintenance.

Options		Centripetal		Pintle		Showerhead	
Categories	**Weights**	**Value (1 - 10)**	**Score**	**Value (1 - 10)**	**Score**	**Value (1 - 10)**	**Score**
Combustion Stability	30%	8	2.4	10	3	5	1.5
Simplicity	20%	4	.8	7	1.4	4	.8
Reusability	50%	8	4	8	4	7	3.5
Total Score	**100.00%**	7.2		8.4		5.8	

Table 5. Injector Trade Studies

4.4. Verification

4.4.1. Water Flow Testing: Water flow testing will allow for the calculation of the discharge coefficient and to ensure that the injector is performing as designed in regards to injection velocities, spray angle and atomization.

4.4.2. ANSYS: Verify injection velocities through simulations

4.4.3. Hot firing: Hot firing for short durations to ensure proper injector performance and reliability.The tests will ensure that parts can withstand multiple use or required maintenance can be performed to allow for multiple firings.

4.5. Pintle Body

4.5.1. Characteristics

4.5.1.1. Performance

4.5.1.1.1. Oxidizer Velocity: 30.1066 [m/s]

4.5.1.2. Physical Characteristics

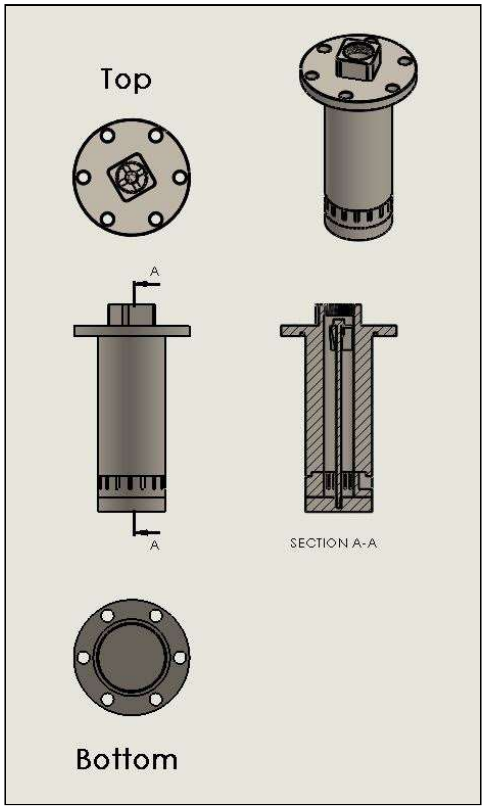

Figure 6. Pintle Body Drawing

4.5.2. Design

4.5.2.1. Design Approach

4.5.2.1.1. TMR is used to find the required oxidizer velocity and orifice areas. Using pintle design parameters the dimensions of the pintle body and number of slots of the oxidizer are found.

4.5.2.1.2. Design Parameters:

4.5.2.1.2.1. Oxidizer velocity > 10 [m/s]

4.5.2.1.2.2. Blockage Factor (BF): .3 < BF < .7

4.5.2.1.2.3. Number of Orifices = 16 - 36

4.5.2.1.2.4. Skip Length Ratio = 1

4.5.2.1.2.5. Pintle Diameter = ⅓ to ⅕ of chamber diameter

4.5.2.2. Analysis Tools

4.5.2.2.1. MatLab

4.5.2.2.1.1. Used to calculate injection velocity and to find stresses inside of the pintle body to verify component integrity.

4.6. Injector Plate

4.6.1. Characteristics

4.6.1.1. Performance

4.6.1.1.1. Fuel velocity = 84.2144 [m/s]

4.6.1.2. Physical Characteristics

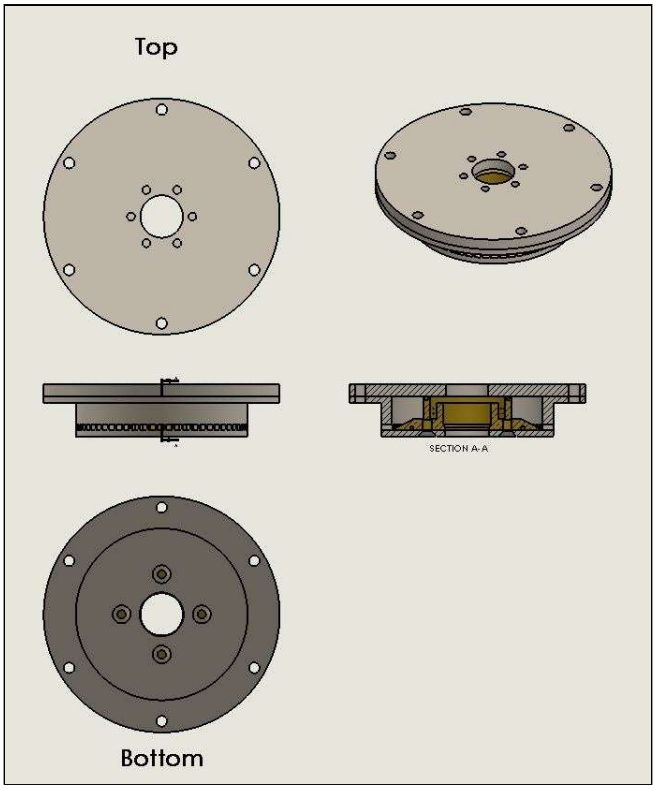

Figure 7. Injector Plate Drawing

4.6.2. Design

4.6.2.1. Design Approach

4.6.2.1.1. TMR was used to find the fuel velocity and fuel annulus area required. The injector screen was designed to ensure the fuel is at the proper pressures through the injector plate to ensure the desired injection performance.

4.6.2.2. Analysis Tools

4.6.2.2.1. MatLab

4.6.2.2.1.1. Used to calculate fuel pressures throughout the injector plate for the fuel to remain a liquid and to ensure proper injection performance.

5. Thrust Chamber

5.1. Definitions

5.1.1. Combustion Chamber: Region where the propellants are atomized and ignited. The combustion region of the engine.

5.1.2. Throat: The restricted region of the engine

5.1.3. Nozzle: Region after the throat where exhaust gasses are expanded at near adiabatic conditions to create thrust.

5.2. Characteristics

5.2.1. Performance

5.2.1.1. Ideal exhaust velocity as determined by the method of characteristics of 2792 m/s.

5.2.1.2. Ideal specific impulse as determined by the method of characteristics of 270 s.

5.2.1.3. Thrust at sea level conditions of 10kN.

5.2.2. External interface characteristics

5.2.2.1. Mounting hardware to the engine gimbal.

5.2.3. Physical characteristics

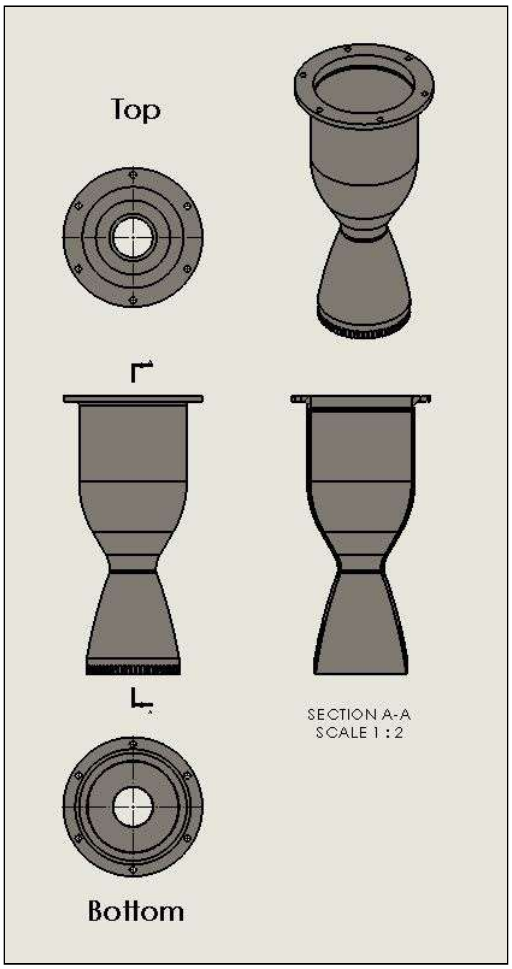

Figure 8. Thrust Chamber Drawing

5.2.3.1. Mass: 3.64873 kg

5.2.4. Other characteristics

5.2.4.1. Reliability

5.2.4.1.1. Must be able to withstand multiple firings and allow for inspection and maintenance

5.3. Design

5.3.1. Design approach

5.3.1.1. With methane and oxygen selected as fuel, Nasa CEA and the parametric rocket design equations (Appendix 3a.) were used in conjunction with Matlab to design the ideal rocket parameters that meet our requirements. The ideal parameters were used in RPA to design a contour for the thrust chamber as well as conduct heat transfer analysis. This was done in iterations during both stages to meet requirements.

5.3.2. Analysis tools

5.3.2.1. MatLab: Performance measures and temperatures
5.3.2.2. RPA: Wall temperature and performance measures
5.3.2.3. Solidworks: used to check deformation of chamber wall due to temperatures and pressure
5.3.2.4. ANSYS: Temperatures and Exhaust Simulations

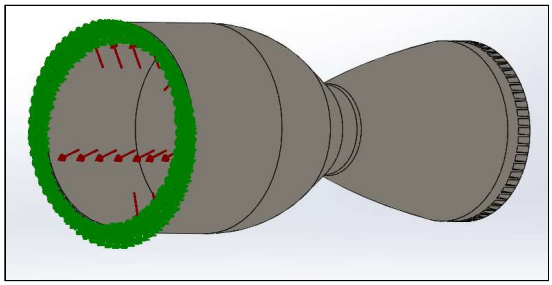

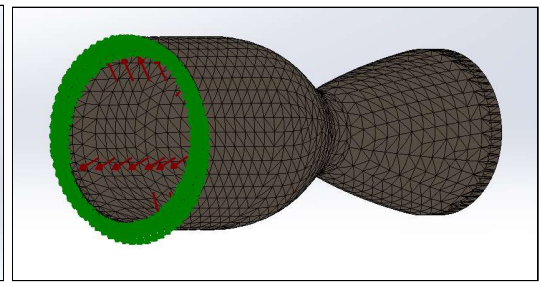

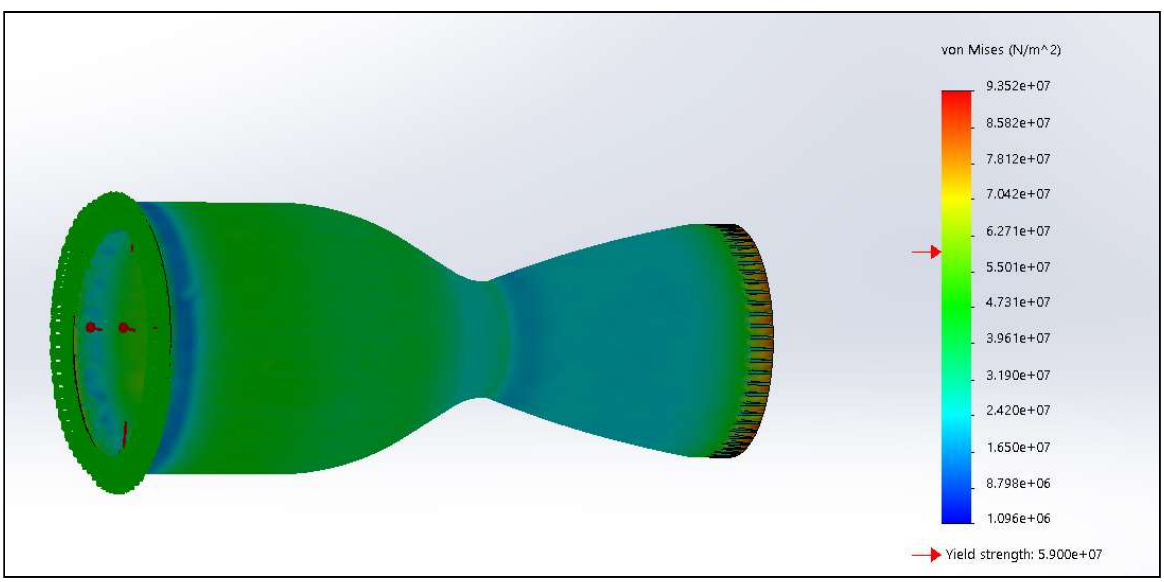

Figure 9. Thrust Chamber Pressure Analysis Results

5.3.3. Trade Studies

Options		Copper Alloy		Inconel 718		Inconel 625	
Categories	**Weights**	**Value (1 - 10)**	**Score**	**Value (1 - 10)**	**Score**	**Value (1 - 10)**	**Score**
Melting Range	35%	6	2.1	10	3.5	10	3.5
Thermal Conductivity	25%	10	2.5	6	1.5	5	1.25
Tensile/Yield Strength	20%	5	1	10	2	9	1.8
Ease of manufacturing	20%	2	.4	6	1.2	6	1.2
Total Score	**100.00%**	(Total Score)/10 = 60.00%		(Total Score)/10 = 82.0%		(Total Score)/10 = 77.5%	

Table 6. 3D Printable Material Trade Study

5.4. Verification

5.4.1. RPA software to verify chamber temperatures, chamber pressures, coolant pressure, and thrust.

5.4.2. Ansys heat transfer and exhaust simulations were used to verify the exhaust velocity, thrust, and mass flow rates.

5.4.3. Hot firing: Hot firing for short durations to ensure proper thrust chamber performance and reliability.The tests will ensure that parts can withstand multiple use or required maintenance can be performed to allow for multiple firings.

5.4.4. *Ansys Simulation Report in Appendix 3c.

6. Cooling System .

6.1. Characteristics

6.1.1. Performance

6.1.1.1. Fuel temperature: less than 190.56 [K]

6.1.1.2. Wall temperature: less than 1609 [K]

6.1.2. External interface characteristics

6.1.2.1. Fuel hose to fuel manifold interface

6.1.2.1.1. A half inch high pressure steel braided hose threads onto the fuel manifold at the bottom of the nozzle

6.1.2.2. Cooling channels to Injector Plate interface

6.1.2.2.1. The injector plate mates into the thrust chamber and connects to the open fuel channels. Sealed by o-rings.

6.1.3. Physical characteristics

Figure 10. Cooling Channel Geometry

6.1.4. Other characteristics

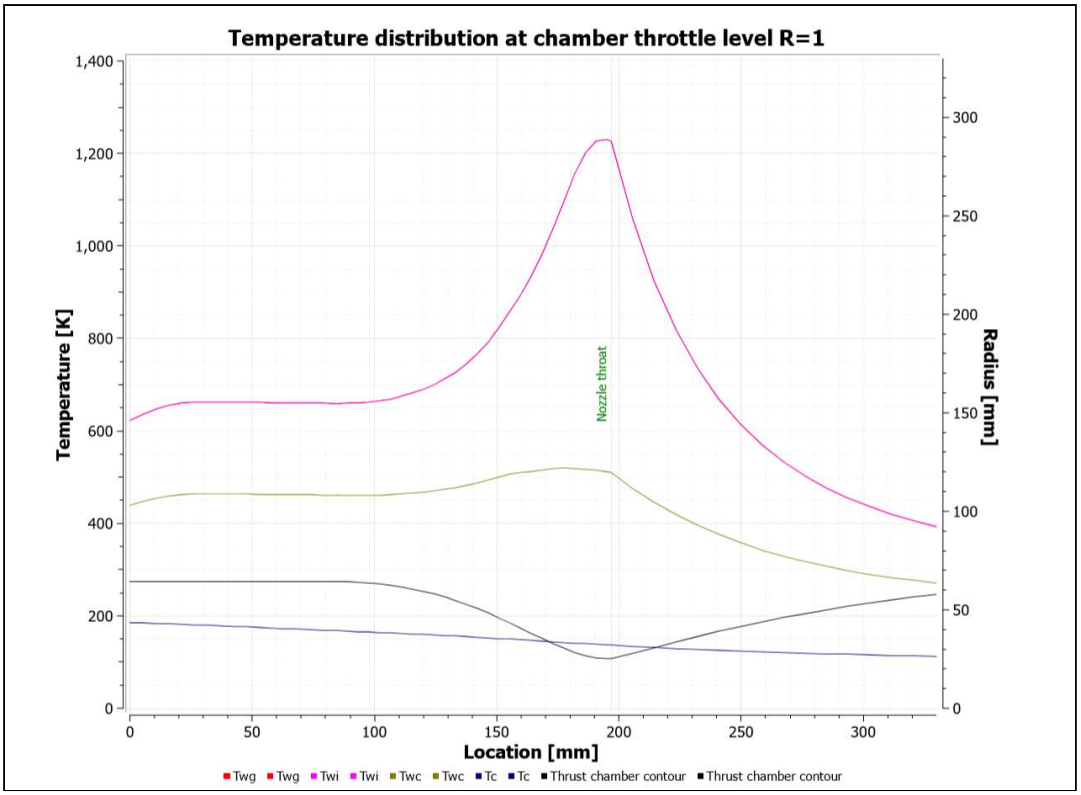

Figure 11. Temperature Distribution vs Position

6.1.4.1. Reliability

6.1.4.1.1. Must be able to withstand multiple firings

6.2. Design

6.2.1. Design approach

6.2.1.1. Four initial parameters, Fuel Mass Flow Rate, Specific Heat Capacity of CH4, Combustion Temperature, and Thermal Conductivity of Inconel 718, were inputted into RPA to develop multiple Cooling Channel cross sectional area dimensions at varying locations of the Engine wall. The inlet manifold was then designed based on the sum of the cross sectional area of the cooling channels at the entrance nozzle. Iterations were implemented into RPA to satisfy changes in the four initial parameters. Once the final Cross Sectional and Inlet Manifold dimensions were established, 3D models were created utilizing Solidworks.

6.2.2. Analysis tools

6.2.2.1. RPA was used for analysis of the heat transfer from the thrust chamber to the coolant.

6.2.3. Trade studies

Options		Triangular		Circular		Semicircle	
Categories	**Weights**	**Value (1 - 10)**	**Score**	**Value (1 - 10)**	**Score**	**Value (1 - 10)**	**Score**
Wall Stress Distribution	40%	5	2	10	4	8	3.2
Required Material (cost)	30%	7	2.1	5	1.5	10	3
Implementation	15%	9	1.35	5	0.75	8	1.2
Simplicity (Pressure and Velocity Calculations)	15%	5	0.75	10	1.5	8	1.2
Total Score	**100.00%**	(Total Score)/10 = 62.00%		(Total Score)/10 = 77.50%		(Total Score)/10 = **86.00%**	

Table 7. Cooling Channel Cross-Sectional Shape Trade Study

6.3. Verification

6.3.1. Ansys will be used to verify heat transfer capabilities of the cooling system through multi-physics analysis and simulations.

7. Test Stand

7.1. Definitions

7.1.1. Plumbing: Consist of the stored oxidizer and fuel and is tasked with feeding the engine during the test stage.

7.1.1.1. Helium Tank: Responsible for storing helium at 2200 psi. This tank is used to pressurize fuel and oxidizer tanks at a minimum of 625 psi.

7.1.1.2. LOX/Methane Tanks: responsible for storing liquid methane and oxygen at a minimum pressure of 625 psi.

7.1.1.3. Cryogenic hoses: Transports and directs pressurized fuel and oxygen to the engine.

7.1.1.4. HEROSE Cryogenic Ball Valve: High-Pressure Valves that manually allow the user to shut off oxidizer and/or fuel flow to the engine. These hoses can withstand a maximum pressure of 1160 psi and a minimum temperature of -198 Celsius.

7.1.1.5. Pressure Regulators: Valves that reduce the total pressure before entering downstream valves.

7.1.1.5.1. Two-Stage Valve: Valve responsible for reducing Helium's, initial 2200 psi pressure to 1000 psi or less. Is also used to

reduce the oxidizer and fuel pressure from 1000 psi to the minimum 625 psi.

7.1.1.6. Cryogenic Relief Valve: Valve with adjustable pressure range, 600 to 1000 psi, that automatically opens when flow reaches max allowable pressure.

7.1.1.7. HEROSE Piston Check Valve: Prevents helium, fuel, or oxidizer flow from reversing during pressurization and feeding stages.

7.1.1.8. Technetics Burst Disc: one time use custom made Cryogenic Emergency Disc that will rupture at pressures above 1000 psi to prevent valve damage or explosions due to electrical malfunctions and/or human error

7.1.1.9. Steel Wool: Used to ignite the engine

7.1.2. Instrumentation: Electrically controlled Instruments used to help in the measurement of the engine's performance during test fire.

7.1.2.1. Pressure transducer: Used to Measure the pressure entering and exiting the pressurized tanks. A voltage signal is sent to the Microcontroller to automate the closing or opening of valves.

7.1.2.2. Temperature Controller: Measures the temperature in the LOx and Methane tanks and maintains the cryogenic temperature autonomously.

7.1.2.3. JAKSA Solenoid Valve: Electromechanically controlled valve which allows the user to safety shut on and off flow paths.

7.1.2.4. Load Cell / Force Sensor: Measures up to 2500 lbs of compression and is used to measure total thrust produced by the engine during the test fire. These Load Cells are capable of outputting data for data recording.

7.1.2.5. Thermocouple Probe: Attached to the outer surface of the engine to measure temperature. These thermocouples are capable of reading 75 Kelvin and will be measuring the nearby coolant temperature.

7.1.2.6. SIERRA Mass Flow Control Valve: Electrical instrument that can manipulate the mass flow rate of fuel or oxidizer.

7.1.2.7. Arduino Uno: Microcontroller records temperature and thrust data during test fire and will control solenoid valves. The Arduino will close off solenoid valves during any malfunctions such as high temperature readings.

7.1.2.8. 24v Li-po Battery: Powers arduino and electronically controlled valves.

7.1.2.9. SIERRA Mass Flow Meter & Controller: Reads and manipulates mass flow rate during test fire.

7.1.3. Support Structure: Connects and secures all major test stand components to a single body during test fire.

7.1.3.1. Mounting Plate: 20x18x0.25 in aluminum 6061 alloy plate that secures engine onto test stand while allowing necessary plumbing to access engine's cooling manifold and injector.

7.1.3.2. Frame: The frame consists of steel T-slotted Framing Extrusion and is responsible for supporting the weight of all engine components in addition to the thrust produced during test fire.

7.2. Characteristics

7.2.1. Performance

7.2.1.1. The test stand structure is able to withstand the 10,000 Newtons of thrust produced by the engine with a factor of safety of 7.19.

7.2.1.2. The test stand plumbing can endure 1000psi of pressure before any burst discs are ruptured.

7.2.1.3. Valves and Tubing are rated to withstand the freezing point of Methane and LOx, -183 Celsius, with a safety factor of about 1.07.

7.2.2. External interface characteristics

7.2.2.1. Cryogenic Methane hose

7.2.2.1.1. A cryogenic hose is attached directly to the engine manifold to allow the flow of methane into the cooling channels.

7.2.2.2. Cryogenic LOx hose

7.2.2.2.1. A cryogenic hose is directly connected to the injector to inject LOx into the engine

7.2.2.3. Thrust Plate

7.2.2.3.1. The engine is mounted directly onto a 9x9x0.2in steel mounting plate which is supported by 4 load cells. During a test fire, this thrust plate allows the equal distribution of force onto the 4 load cells.

7.2.2.4. Thermocouples

7.2.2.4.1. Various thermocouples will be placed on the outer surface of the engine so that the temperature of coolant can be measured and correlated with the internal chamber, throat, and nozzle temperature.

7.2.2.5. Steel Wool

7.2.2.5.1. Steel is inserted directly inside the engine chamber and ignited to initiate the test fire.

7.2.3. Physical characteristics

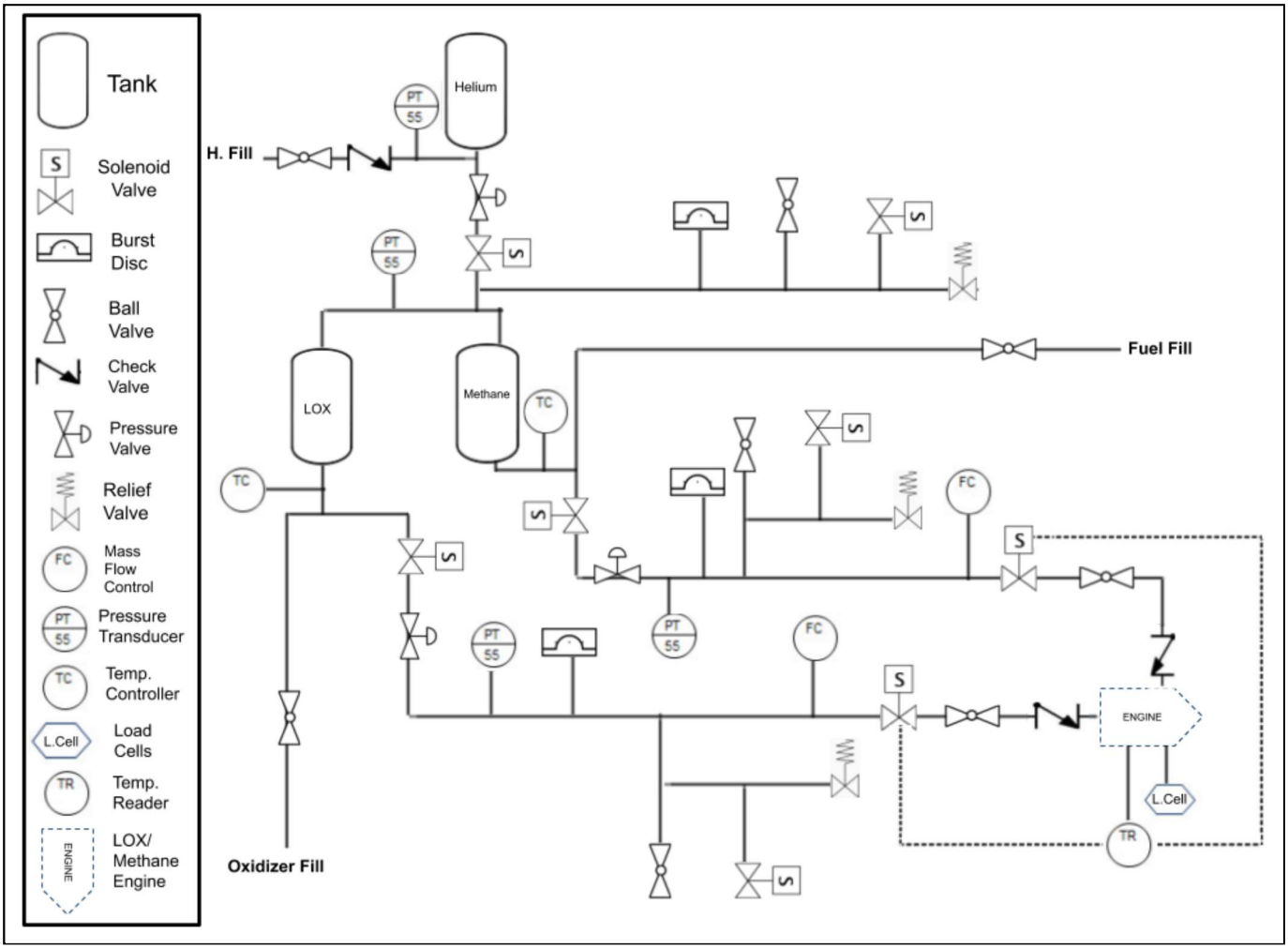

Figure 12. Test Stand Plumbing & Instrumentation Diagram (P&ID)

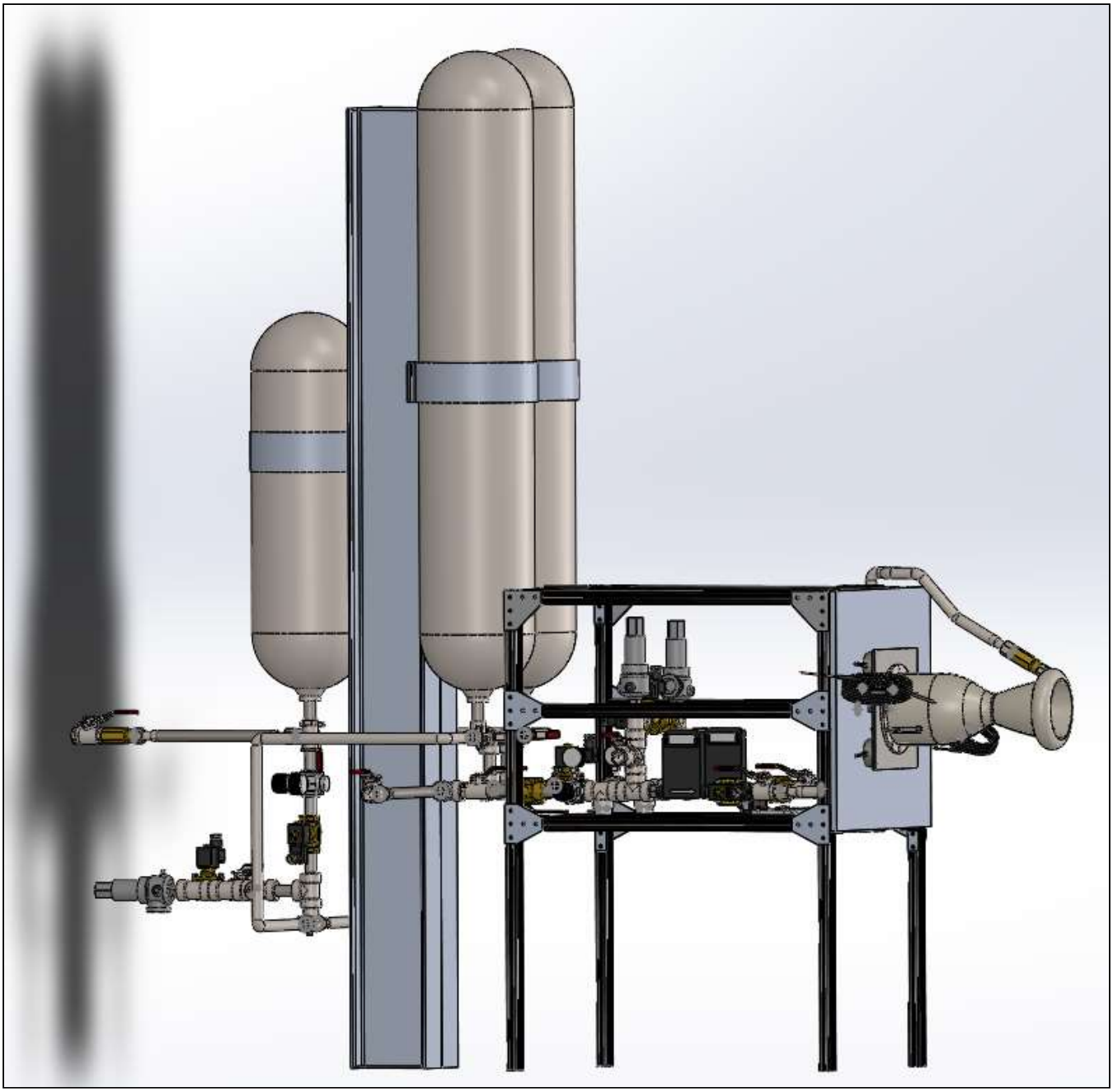

Figure 13. Test Stand & Secured Engine Drawing

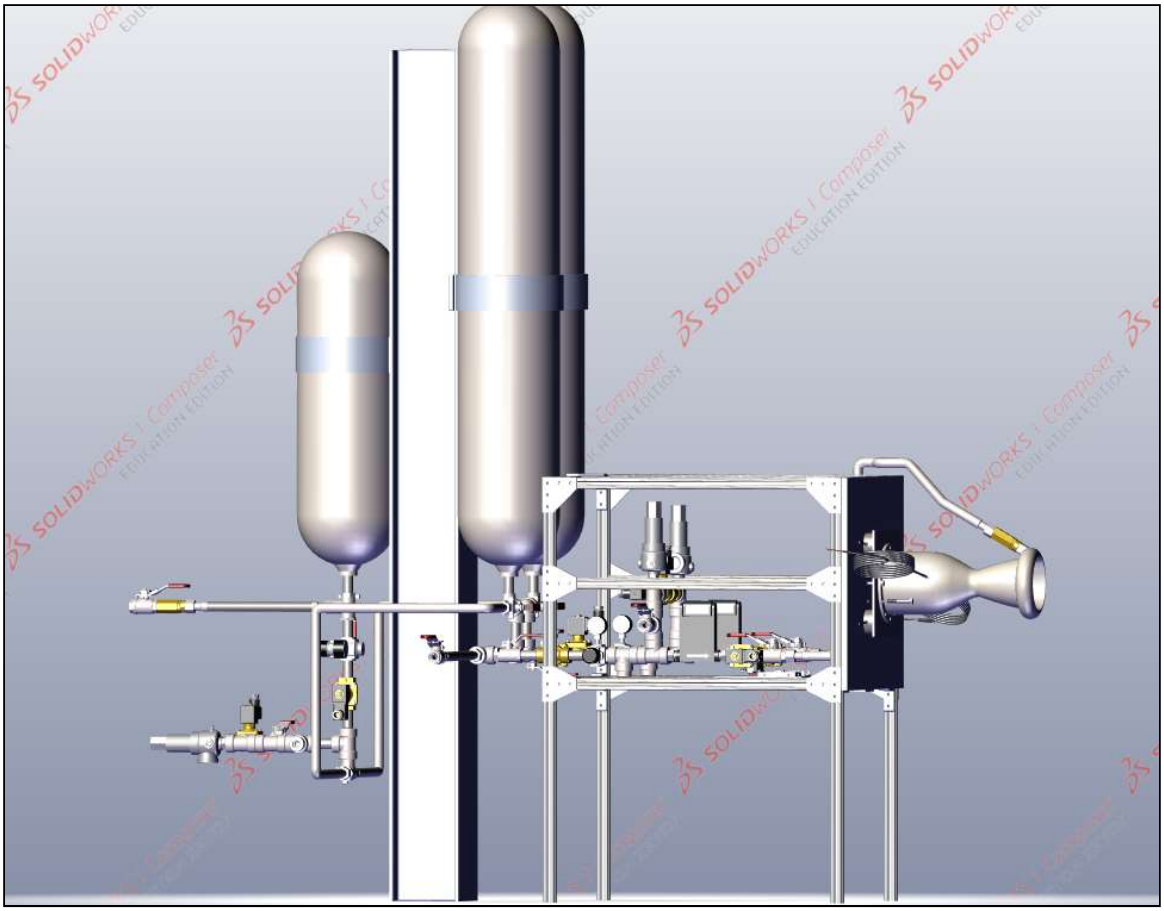

Figure 14. Test Stand & Secured Engine Drawing Cont.

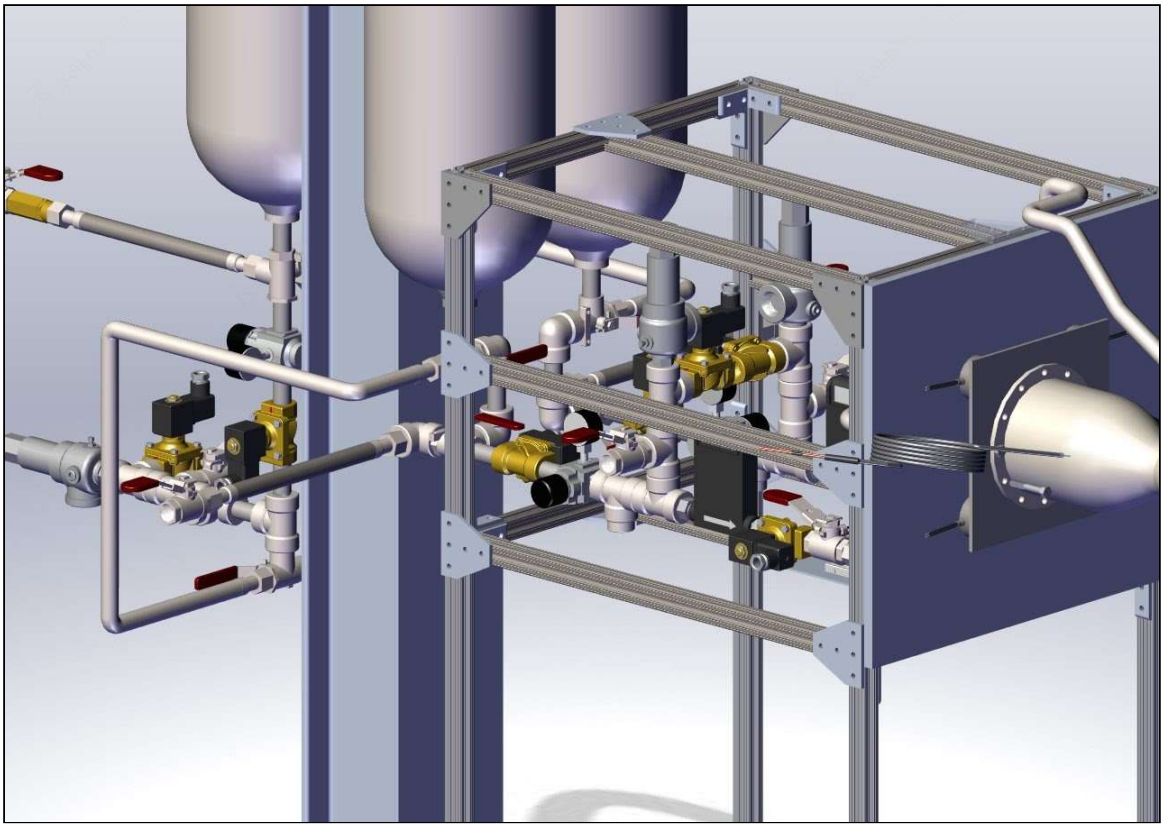

Figure 15. Test Stand Plumbing

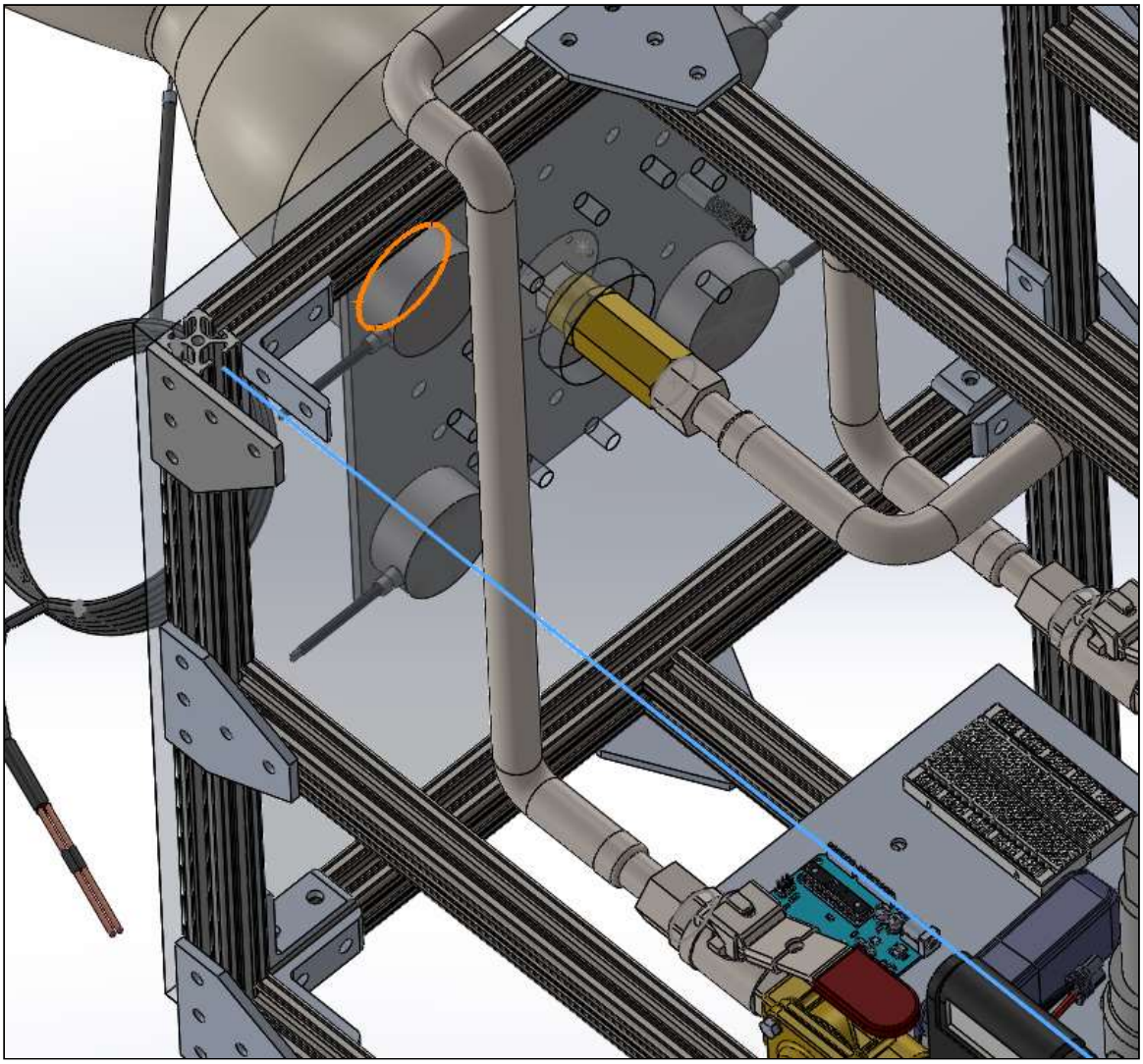

Figure 16. Thermocouple, Load Cells, and Electronics Platter

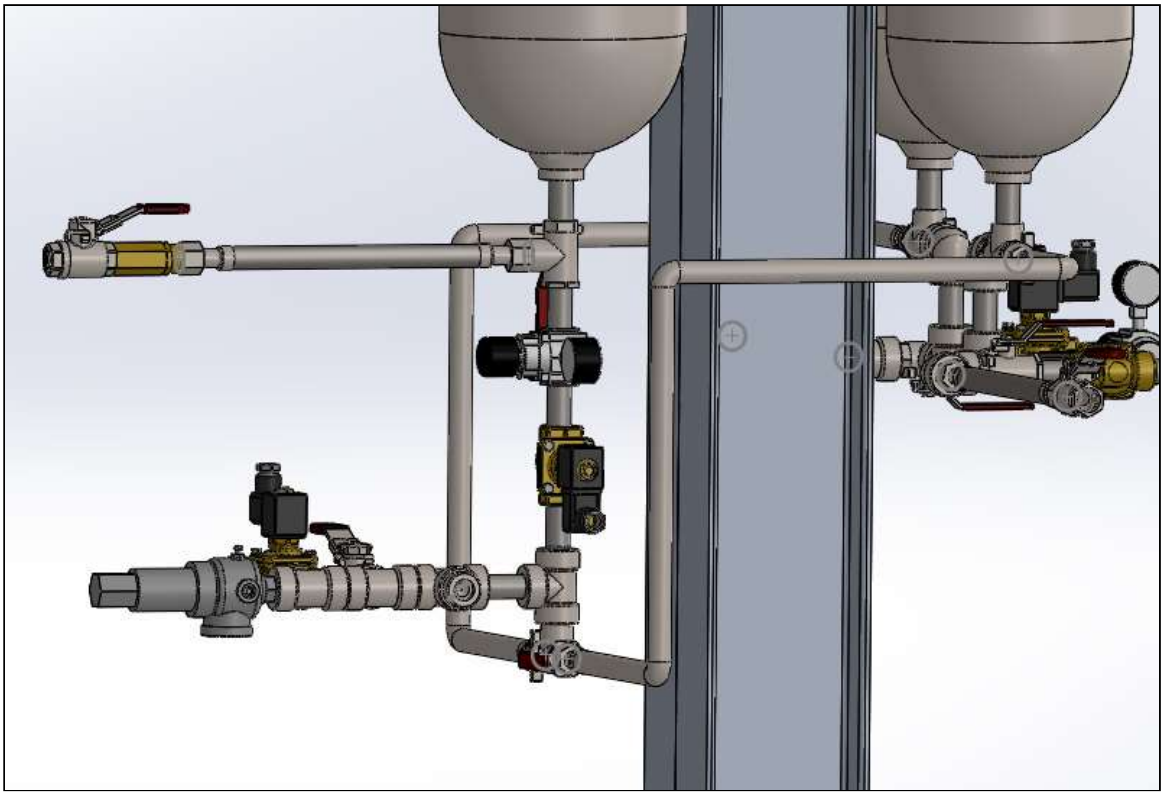

Figure 17. Helium fill tube and depressurization valves

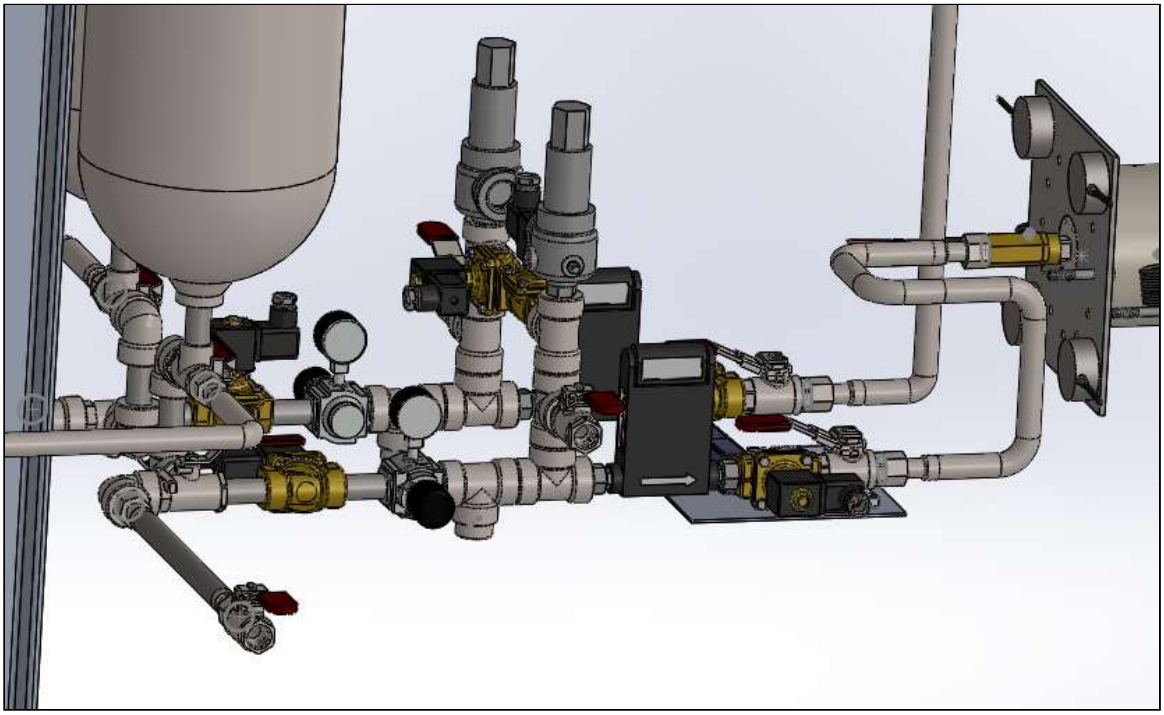

Figure 18.LOx and Methane feeding tubes and valves

7.3. Design

7.3.1. Design approach

7.3.1.1. The test stand's objective is to feed and test the performance of the engine during a test fire. To accomplish a test fire, the following steps need to be achieved.

7.3.1.1.1. Helium fill/drain: A helium tank is incorporated to the test stand to allow the pressurization of the oxidizer and fuel tank for every test fire.

7.3.1.1.2. LOx/Methane fill/drain: Each LOx and Methane tank has its own dedicated valve flow path with a ball valve to allow filling and draining

7.3.1.1.3. LOx/Methane Pressurization: A solenoid valve and a pressure regulator is included to control the amount of helium that is pressurizing the LOx and Methane tanks.

7.3.1.1.4. LOx/Methane Depressurization: During the cancellation of a test fire, a flow path is included between the Helium tanks and oxidizer and fuel tanks to allow pressure to escape.

7.3.1.1.5. LOx/Methane feed to engine: Cryogenic and high pressure valves direct the flow to the engine.

7.3.1.1.6. Measuring performance: The test stand includes instruments such as cell loads and thermocouples to test the thrust and regenerative cooling effectiveness, respectively.

7.3.1.1.7. Prioritizing Safety: To emphasize safety, each main flow path contains an electronically controlled solenoid valve that can be controlled via code and from a distance. These valves will automatically shut off during electrical malfunctions. Additionally, burst discs and relief valves are included to prevent ruptures due to increasing pressures.

7.3.2. Analysis tools

7.3.2.1. SolidWorks: A static force simulation is used within solidworks to ensure that the test stand frame can endure a minimum of 10,000N of thrust without experiencing plastic deformation.

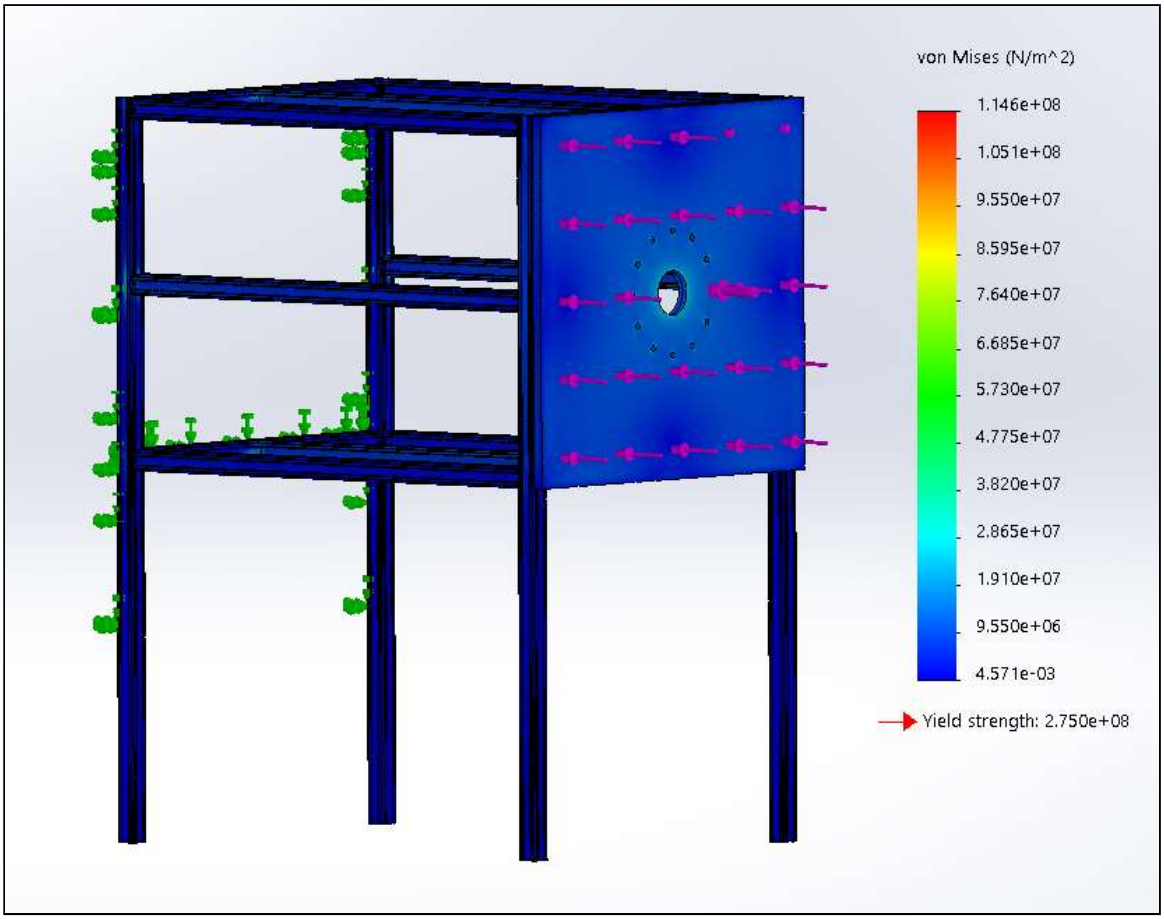

Figure 19. Test Stand Structure Static Force Simulation

7.3.3. Trade studies

Options		**Helium**		**Nitrogen**	
Categories	**Weights**	**Value (1 - 10)**	**Score**	**Value (1 - 10)**	**Score**
Cost	25%	5	1.25	10	2.5
Pressure Consistency	65%	9	5.85	5	3.25
Storability	10%	9	0.9	6	0.6
Total Score	**100.00%**	(Total Score)/10 = 80%		(Total Score)/10 = 63.5%	

Table 8. LOx and Methane Pressurant Trade Study

Options		8020 Tubing		Rectangular Aluminum		Steel T-slotted Extrusion	
Categories	**Weights**	**Value (1 - 10)**	**Score**	**Value (1 - 10)**	**Score**	**Value (1 - 10)**	**Score**
Sturdiness	40%	6	2.4	6	2.4	10	4.0
Required Material (cost)	30%	6	1.8	9	2.7	7	2.1
Implementation	30%	10	3	5	1.5	10	3.0
Total Score	**100.00%**	(Total Score)/10 = 72%		(Total Score)/10 = 66%		(Total Score)/10 = 91%	

Table 9. Test Stand Support Frame Material Trade Study

7.4. Verification:

7.4.1. Solidworks Force Analysis: The test stand structure was analyzed using solidworks and found to have a safety factor of 7.19 when the engine produces a thrust of 10,000 Newtons.

.

Appendices

1. Individual Contribution
    a. Alexia Louis
        i. Drafted engine and components based on design parameters calculated or verified by team
        ii. Acted as Project Manager and oversaw scheduling and reviewed report before submission
    b. Brandon Sheehan
        i. Used MatLab to help with calculations and verification of subsystems and their respected components
    c. Christopher Henderson
        i. Designed simulation models to be used for simulations and verifications.
        ii. Ran ANSYS simulations on exhaust velocity through the engine and into far field.
        iii. Used ANSYS results to verify thrust, Isp, and mass flow rates.
    d. Eric Aguilar
        i. Conducted pressure analysis on thrust chamber and static thrust simulations on the test stand structure using Solidworks.
        ii. Designed and created CAD model of test stand.

2. Glossary
    a. Static Force Simulation: Simulation with static forces and no moving components. Comprised of applied forces and reaction forces
    b. Isp (Specific Impulse): Total impulse per unit of propellant [seconds]
    c. O/F: Oxidizer to Fuel mass ratio
    d. Axisymmetric: Symmetric about an axis
    e. Pintle: center component that injects liquid oxygen into the thrust chamber
        i. Pintle Body: The main hollow cylinder that directs the flow of the liquid oxygen to the LOx ring for injection.
        ii. LOx Ring: slotted ring that changes the flow of the liquid oxygen and injects it at required velocities into the thrust chamber.
        iii. Skip Length Ratio: the ratio of how far the pintle body protrudes from the bottom of the injection plate into the thrust chamber measured to the top of the slots, to the diameter of the pintle body.
        iv. Blockage Factor (BF): The total width of the slots divided by the circumference of the tube As BF becomes less than one the collisional mixing is traded with interfacial or shear mixing (outer stream passing through gaps in the inner stream)
    f. Injector plate: directs the flow of liquid methane fuel from the cooling channel to be injected into the thrust chamber through the fuel annulus.
        i. Screen Ring: controls the velocity and stabilizes the flow of the fuel by forcing the fuel through a screen before reaching the fuel annulus for injection.

g. Total Momentum Ratio (TMR): TMR is the product of the mass flow rate and velocity of the inner flow divided by the mass flow rate and velocity of the outer flow.
h. Combustion Chamber: Region where the propellants are atomized and ignited. The combustion region of the engine.
i. Throat: The restricted region of the engine
j. Nozzle: Region after the throat where exhaust gasses are expanded at near adiabatic conditions to create thrust.
k. Plumbing: Consist of the stored oxidizer and fuel and is tasked with feeding the engine during the test stage.
    i. Helium Tank: Responsible for storing helium at 2200 psi. This tank is used to pressurize fuel and oxidizer tanks at a minimum of 625 psi.
    ii. LOx/Methane Tanks: responsible for storing liquid methane and oxygen at a minimum pressure of 625 psi.
    iii. Cryogenic hoses: Transports and directs pressurized fuel and oxygen to the engine.
    iv. HEROSE Cryogenic Ball Valve: High-Pressure Valves that manually allow the user to shut off oxidizer and/or fuel flow to the engine. These hoses can withstand a maximum pressure of 1160 psi and a minimum temperature of -198 Celsius.
    v. Pressure Regulators: Valves that reduce the total pressure before entering downstream valves.
        1. Two-Stage Valve: Valve responsible for reducing Helium's, initial 2200 psi pressure to 1000 psi or less. Is also used to reduce The oxidizer and fuel pressure from 1000 psi to the minimum 625 psi.
    vi. Cryogenic Relief Valve: Valve with adjustable pressure range, 600 to 1000 psi, that automatically opens when flow reaches max allowable pressure.
    vii. HEROSE Piston Check Valve: Prevents helium, fuel, or oxidizer flow from reversing during pressurization and feeding stages.
    viii. Technetics Burst Disc: one time use custom made Cryogenic Emergency Disc that will rupture at pressures above 1000 psi to prevent valve damage or explosions due to electrical malfunctions and/or human error
    ix. Steel Wool: Used to ignite the engine
l. Instrumentation: Electrically controlled Instruments used to help in the measurement of the engine's performance during test fire.
    i. Pressure transducer: Used to Measure the pressure entering and exiting the pressurized tanks. A voltage signal is sent to the Microcontroller to automate the closing or opening of valves.
    ii. Temperature Controller: Measures the temperature in the LOx and Methane tanks and maintains the cryogenic temperature autonomously.
    iii. JAKSA Solenoid Valve: Electromechanically controlled valve which allows the user to safety shut on and off flow paths.

iv. Load Cell / Force Sensor: Measures up to 2500 lbs of compression and is used to measure total thrust produced by the engine during the test fire. These Load Cells are capable of outputting data for data recording.
v. Thermocouple Probe: Attached to the outer surface of the engine to measure temperature. These thermocouples are capable of reading 75 Kelvin and will be measuring the nearby coolant temperature.
vi. SIERRA Mass Flow Control Valve: Electrical instrument that can manipulate the mass flow rate of fuel or oxidizer.
vii. Arduino Uno: Microcontroller records temperature and thrust data during test fire and will control solenoid valves. The Arduino will close off solenoid valves during any malfunctions such as high temperature readings.
viii. 12v Li-po Battery: Powers arduino and electronically controlled valves.
ix. SIERRA Mass Flow Meter & Controller: Reads and manipulates mass flow rate during test fire.

m. Support Structure: Connects and secures all major test stand components to a single body during test fire.
    i. Mounting Plate: 20x18x0.25 in aluminum 6061 alloy plate that secures engine onto test stand while allowing necessary plumbing to access engine's cooling manifold and injector.
    ii. Frame: The frame consists of steel T-slotted Framing Extrusion and is responsible for supporting the weight of all engine components in addition to the thrust produced during test fire.

3. Others

a. Parametric Rocket Design Equations

*From Table 5-5 (Rocket Propulsion Element)

I_s : 296s

K : 1.2

Thrust Coefficient:

$C_F = \frac{I_S g_0}{C^*} = \frac{296[s]*9.81[m/s]}{1835[m/s]} = 1.58$

$Where\ C_F = thrust\ coefficient$

Throat Coefficient:

$A_t = \frac{F}{C_F P_1} = 3000N\ /\ (1.58)(7293.6 * 10^3 P) = 3000N/(1.58)(7293.6 * 10^3\ [N/m^2]$

$= 2.59929 * 10^{-4}[m^2]\ \approx .358^{11}$

Throat Area Alternate Equation:

$A_t = \frac{mdot}{p_1}\sqrt{\frac{RT_1}{K[2/(K+1)]^{(K+1)/(K-1)}}} = \frac{1.000938}{7293.6 \cdot 10^3}\sqrt{\frac{(409.556)(3526[K])}{1.2[2/2.2]^{(2.2/2)}}}$

$A_t = 2.564 \cdot 10^{-4} m^2$

$where\ R\ is\ the\ gas\ constant\ of\ propellant$

$R = R'/M$ =8.314/.0203[kg*mol]= 409.556 [J/K]

Exit Velocity (Eq 3-16):

$C = V_L = \sqrt{(\frac{2K}{K-1})(\frac{R*T_1}{M})[1-(\frac{p_2}{P_1})^{(K-1)/K}]} = [[\frac{(2)(1.2)}{.2}][\frac{(8.3145[kg \cdot m^2/s^2 \cdot mol])(3526K)}{.0203kg/mol}][1-(\frac{101.3 \cdot 10^3[P]}{7293.6 \cdot 10^3[P]})^{(1.2-1/1.2)}]]^{1/2}$

C = 2972.12 m/s

Optimum Area Ratio:

$P_y = P_2 = P$ ———???

$\frac{A_t}{A_y} = \frac{V_t V_v}{V_y V_t} = (\frac{(K+1)}{2})^{(1/(k-1))}(\frac{P_y}{P_1})^{1/k}\sqrt{\frac{K+1}{K-1}[1-(\frac{P_y}{P_1})^{(k-1)/K}} = (\frac{1.2+1}{2})^{1/.2}(\frac{101.34[P]}{7293.64[P]})^{1/1.2}\sqrt{\frac{1.2+1}{.2}[1-(\frac{101.34[P]}{7293.64[P]})^{.2/1.2}]}$

= (1.61051)(.028328)(2.36789)

$\frac{A_t}{A_y} = .10803$

$A_2 = A_1 = A_{ext} = 2.59929 \cdot 10^{-4}[m^2]/.10805 = .002406\ [m^2] \approx 1.089^{-11}$???

Throat Temperature:

$T_t = 2T_1/(K+1) = 2(3526K)/(1.2+1)$

$T_t = 3205.45K$

Max Flow Rate:

$mdot = F/c = 3000[N]\ /\ 2972.12[m/s] = 3000[kg \cdot m/s^2]\ /\ 2972.12[m/s]$

$mdot = 1.00938kg/s$

b. RPA Table of Results

Location,	Radius,	Conv. heat	Conv. heat	Rad. heat	Total heat	Twg,	Twi,	Twc,	Tc,	pc,	wc,	rho,
mm	mm	coeff., k	flux, kW/	flux, kW/m	flux, kW/	K	K	K	K	MPa	m/s	kg/m^3
		W/m^2-K	m^2	^2	m^2							
#----------												
0	64.32	2.0267	5623.265	661.7803	6285.0453	662.18	662.18	481.47	184.22	4.025	38.61	153.25
5.29	64.32	2.0208	5575.5138	897.2021	6472.7159	677.74	677.74	491.71	183.24	4.028	38.16	155.06
10.57	64.32	2.0162	5537.957	1079.2667	6617.2237	690.06	690.06	499.94	182.21	4.032	37.7	156.94
15.86	64.32	2.0128	5510.2242	1209.3534	6719.5775	699.2	699.2	506.19	181.15	4.035	37.24	158.88
21.15	64.32	2.0107	5492.9383	1285.9207	6778.859	704.96	704.96	510.33	180.07	4.038	36.78	160.89
26.44	64.32	2.0101	5488.0508	1311.0131	6799.0639	706.55	706.55	511.32	178.96	4.041	36.41	162.52
31.72	64.32	2.0102	5488.6082	1311.4402	6800.0484	706.42	706.42	511.21	177.84	4.044	36.05	164.13
37.01	64.32	2.0103	5488.8282	1312.9381	6801.7663	706.38	706.38	511.15	176.72	4.047	35.7	165.76
42.3	64.32	2.0102	5489.1159	1311.3084	6800.4244	706.21	706.21	510.95	175.59	4.05	35.35	167.4
47.59	64.32	2.0103	5489.4908	1311.3413	6800.8321	706.09	706.09	510.82	174.45	4.054	35	169.05
52.87	64.32	2.0104	5489.7955	1313.0834	6802.8789	706.05	706.05	510.78	173.3	4.057	34.66	170.72
58.16	64.32	2.0105	5490.3953	1312.8745	6803.2698	705.89	705.89	510.65	172.15	4.06	34.32	172.39
63.45	64.32	2.0104	5490.5222	1311.5024	6802.0246	705.76	705.76	510.46	170.99	4.063	33.99	174.08
68.74	64.32	2.0106	5491.2906	1312.8857	6804.1764	705.61	705.61	510.37	169.82	4.066	33.67	175.75
74.02	64.32	2.0107	5492.3151	1313.019	6805.3341	705.25	705.25	509.94	168.64	4.069	33.39	177.23
79.31	64.32	2.0108	5493.492	1311.7665	6805.2585	704.81	704.81	509.44	167.46	4.072	33.11	178.71
84.6	64.32	2.011	5494.7866	1311.5979	6806.3845	704.38	704.38	508.99	166.28	4.075	32.83	180.21
84.6	64.32	2.011	5494.7478	1312.9995	6807.7473	704.44	704.44	509.06	166.28	4.075	32.83	180.21
89.02	64.25	2.0154	5505.5089	1320.9064	6826.4153	705.12	705.12	509.23	165.28	4.077	32.65	181.46
93.44	64.02	2.0289	5539.9644	1320.4533	6860.4177	706.31	706.31	509.46	164.29	4.08	32.55	182.72
97.86	63.63	2.0519	5598.9529	1312.0903	6911.0432	708.15	708.15	509.79	163.28	4.082	32.53	183.98
102.28	63.09	2.0852	5682.3685	1311.1981	6993.5667	711.63	711.63	510.97	162.27	4.085	32.6	185.26
106.7	62.39	2.1293	5791.9923	1312.7925	7104.7848	716.61	716.61	512.77	161.25	4.087	32.75	186.56
111.11	61.54	2.1857	5931.8663	1312.382	7244.2483	722.83	722.83	515.06	160.21	4.09	33.01	187.89
115.53	60.51	2.2564	6106.2155	1313.1164	7419.3319	730.61	730.61	517.92	159.15	4.092	33.37	189.14
119.95	59.33	2.3433	6319.8798	1307.4273	7627.3071	739.76	739.76	521.16	158.08	4.095	33.86	190.39
124.37	57.96	2.45	6580.3723	1298.5417	7878.914	750.88	750.88	525.14	156.99	4.098	34.48	191.67
128.79	56.42	2.5794	6892.2111	1295.7952	8188.0064	764.78	764.78	530.26	155.88	4.101	35.24	192.99
133.21	54.69	2.7352	7264.2437	1288.6207	8552.8644	780.93	780.93	536.04	154.74	4.105	36.17	194.36
137.63	52.77	2.9281	7718.1742	1282.2438	9000.418	800.86	800.86	543.27	153.57	4.108	37.31	195.77
142.05	50.65	3.1644	8264.8682	1279.6193	9544.4874	824.97	824.97	551.89	152.35	4.112	38.7	197.25
146.47	48.31	3.4591	8935.2474	1268.5575	10203.8048	853.64	853.64	561.83	151.09	4.117	40.4	198.81

150.89	45.78	3.8282	9759.9104	1257.891	11017.8014	887.29	887.29	572.55	149.79	4.122	41.67	204.26
155.31	43.23	4.2632	10727.8583	1248.4682	11976.3265	920.38	920.38	578.27	148.46	4.127	39.6	228.75
159.73	40.68	4.7769	11840.6337	1229.8498	13070.4836	958.04	958.04	584.66	147.12	4.133	38.2	253.44
164.14	38.12	5.3862	13118.667	1210.4355	14329.1025	1001.17	1001.17	591.82	145.76	4.139	37.34	278.32
168.56	35.57	6.1183	14598.6136	1188.0675	15786.6811	1050.73	1050.73	599.74	144.38	4.145	36.98	303.42
172.98	33.02	7.0061	16320.6174	1155.3176	17475.9349	1107.3	1107.3	608.07	142.99	4.152	37.08	328.74
177.4	30.47	8.092	18331.2263	1101.544	19432.7703	1171.43	1171.43	616.27	141.58	4.16	37.67	354.24
181.82	28.21	9.2594	20397.4002	1020.5183	21417.9184	1233.9	1233.9	621.98	140.21	4.168	38.45	378.84
186.24	26.62	10.1934	21954.6275	929.872	22884.4995	1282.97	1282.97	628.98	138.89	4.176	40.5	384.39
190.66	25.61	10.7897	22937.3031	829.5038	23766.8069	1310.92	1310.92	631.77	137.61	4.185	42.11	386.5
195.08	25.15	10.9677	23266.099	739.8419	24005.9409	1315.44	1315.44	629.47	136.36	4.195	42.78	388.56
196.78	25.11	10.9163	23208.1778	711.3695	23919.5473	1310.77	1310.77	627.26	135.89	4.199	42.77	389.33
205.62	27.71	8.3851	19286.6809	357.5508	19644.2317	1136.68	1136.68	575.31	133.47	4.216	37.8	393.3
214.45	30.79	6.5	15889.6931	252.3458	16142.0389	992.21	992.21	530.86	131.16	4.231	33.21	397.1
223.29	33.71	5.2163	13334.319	205.4288	13539.7477	880.49	880.49	493.39	129.04	4.242	29.75	400.46
232.13	36.48	4.2972	11367.1626	177.671	11544.8335	791.55	791.55	461.33	127.09	4.252	27.05	403.42
240.97	39.1	3.6186	9832.8338	156.7168	9989.5506	719.49	719.49	433.54	125.29	4.26	24.89	406.15
249.81	41.57	3.1063	8623.2186	139.846	8763.0646	660.71	660.71	409.64	123.62	4.268	23.13	408.69
258.65	43.9	2.7102	7654.8777	128.1629	7783.0406	612.32	612.32	389.06	122.05	4.274	21.67	411.06
267.48	46.09	2.3994	6873.6313	116.6296	6990.2609	572.07	572.07	371.3	120.58	4.28	20.45	413.29
276.32	48.14	2.151	6233.7809	108.4566	6342.2375	538.73	538.73	356.29	119.19	4.285	19.41	415.33
285.16	50.07	1.9503	5706.5724	100.7339	5807.3062	510.75	510.75	343.44	117.87	4.29	18.52	417.21
294	51.86	1.786	5268.4197	94.1633	5362.5829	486.97	486.97	332.23	116.62	4.294	17.76	419
302.84	53.53	1.6505	4902.2222	88.9706	4991.1928	466.71	466.71	322.46	115.41	4.298	17.1	420.72
311.68	55.07	1.5379	4594.3239	84.2962	4678.62	449.34	449.34	313.89	114.25	4.302	16.52	422.38
320.51	56.49	1.4436	4334.1376	80.6672	4414.8048	434.42	434.42	306.4	113.13	4.306	16.02	423.98
329.74	57.85	1.3606	4103.3105	77.0022	4180.3127	420.88	420.88	299.47	112	4.309	15.56	425.59

c. Matlab Equations

```
%Brandon C. Sheehan
% Pub Works
% For Senior Design 2020

*****************************************************************************************************************
*****************************************************************************************************************
Copyright © 2019 by PubWorks

All rights reserved. No part of this publication may be reproduced, distributed, or
transmitted in any form or by any means, including photocopying, recording, or other
electronic or mechanical methods, without the prior written permission of the publisher,
except in the case of brief quotations embodied in critical reviews and certain other
noncommercial uses permitted by copyright law. For permission requests, write to the
publisher, addressed "Attention: Permissions Coordinator," at the address below.

Pubworks
Long Beach, CA 90804
Christopher Henderson
323-636-3605
Brandon Sheehan
207-951-1436

*************************************************************************
*************************************************************************


OF = input('Enter the desired O/F ratio as a number to the tenth decimal: ');  %OF is fuel ratio
Pc1 = input('Enter the desired Chamber Pressure in psi from 240 to 1000 in intervals of 20: ');  % Pc1
is chamber pressure in psi
F = input('Enter the desired Thrust in Newtons: ');  % F is thrust

Pc = (Pc1*6.89476);  % converts psi to kPa
%chamber temp
%gives values for chamber temp at different O/F ratios and chamber
%pressures
% Chamber Pressure in table ranges from 240 to 1000 psi by 20
*****************************************************************************************************************
                % Refer to copyright to request access to temperature functions%
            %Must call temperatures as a function of O/F ratio found by NASA CEA%
                        %Code will not work without%
*****************************************************************************************************************
[A] =
[Tc20;Tc21;Tc22;Tc23;Tc24;Tc25;Tc26;Tc27;Tc28;Tc29;Tc30;Tc31;Tc32;Tc33;Tc34;Tc35;Tc36;Tc37;Tc
38;Tc39;Tc40];

OFt = ((OF*10)-20)+1;
```

```
Pc1 = (Pc1/20)-11;
T1 = A(OFt,Pc1);  % T1 is the chamber temp found from table above [K]

k = 1.2; % k is the specific heat ratio for liquid oxygen and liquid methane
R1 = 8.314; % gas constant R'
Tt = 2*T1/(k+1);  % Tt is the throat temp [K]
M = .0203; % M is the mean molar mass
R = R1/M;   % calculates R
Pt_Pc = (2/(k+1))^(k/(k-1));  %using equation 3-20 from RPE calcultes throat to chamber pressure
Pt = Pt_Pc*Pc;  %calculates throat pressure [kPa]
Patm = 101.325; %standard atmospheric pressure at sea level [kPa]
Ve = sqrt(((2*k)/(k-1))*R*T1*(1-(Patm/Pc)^((k-1)/k))); %calculates exit velocity [m/s]
mf = F/Ve; %calculates mass flow [kg/s]
g0 = 9.807; %gravitational force earth [m/s^2]
At_Ay = (((k+1)/2)^(1/(k-1)))*((Patm/Pc)^(1/k))*(sqrt(((k+1)/(k-1))*(1-((Patm/Pc)^((k-1)/k)))));
At = (mf/(Pc*1000))*sqrt((R*T1)/(k*((2/(k+1))^((k+1)/(k-1))))); %[m^2]
Ae = At/At_Ay; %exit area [m^2]
Is = F/(mf*g0); %specific impulse [s]
c_star = (Pc*1000*At)/mf; %c* [m/s]
Cf = (Is*g0)/c_star; %Thrust coefficient
%L_star = 1.016 %[m] note older iteration changed 11/20 selected based of charts showing Hydralox
and keralox based off energy density
L_star = 1.0 %[m] selected based off charts as above but also considering RPA and injector research
Vc = L_star*At;
Lc = .19678 %[m] from RPA as of 11/20
%Lc = 0.1524; %[m] note older iteration changed on 11/20
Ac = Vc/Lc; % [m^2]
Dc = sqrt(Ac/pi)*2; %[m]
Dt = sqrt(At/pi)*2;%[m]
De = sqrt(Ae/pi)*2 %[m]

%Injector Design
%Need to calculate the area of the holes in a pintle injector for the
%oxidizer and fuel
ro_o = 1141.0 % [kg/m^3] density of liquid oxygen
ro_f = 422.4 % [kg/m^3] density of liquid methane
mf_o = mf/(1+(1/OF)); %[kg/s] mass flow rate of the oxidizer
%mf_o1 = (OF*mf)/(OF +1);
mf_f = mf/(1+ OF); %[kg/s] mass flow rate of the fuel
flow_o = mf_o/ro_o;% [m^3/s] volume flow rate of oxidizer
flow_f = mf_f/ro_f;% [m^3/s] volume flow rate of fuel
%in order to calculate Area, assume Cd of .7 as found through research
%papers from experimental values
%assume that change in pressure must be 7%-15% of Chamber pressure to ensure
%safe operation
Cd = .7; %coefficient of discharge, ratio of actual discharge over theoretical
delta_P = .23*Pc; %[kPa] pressure drop from RPA channel exit numbers
```

```
delta_Po = .08*Pc; % low level in safety guidelines selected for TMR close to 1
feed_P = delta_P + Pc; %feed pressure in kpa
feed_Ppsi = feed_P/6.89476;% feed pressure in psi
delta_Pc = .07*Pc; %minimum safe delta p

%Injection Area
A_f = (mf_f/(sqrt(2*ro_f*delta_P*1000)))/Cd;% [m^2] Area of injector fuel
A_o = (mf_o/(sqrt(2*ro_o*delta_Po*1000)))/Cd; % [m^2] Area of injector oxidizer

%velocity of fuel
v_f = sqrt(2*delta_P*1000/ro_f); % [m/s]
%velocity of oxidizer
v_o = sqrt(2*delta_Po*1000/ro_o); % [m/s]
%v_o = 20.435; %[m/s]
%total momentum rate ratio (TMR)
TMR = (v_o*mf_o)/(mf_f*v_f);

%Diameter of chamber Dc1 comes from RPA as of 11/20/19
Dc1 = .12865; %[m] from RPA
%Diameter of pintle
Dp_c = 1/4*Dc1; %pintle diameter is usually 1/3-1/5 the diameter of chamber
Dp = .03175; %[m] selected based off Dp_c and picking closest available

%Diameter of outer circle (fuel orifice from center)
A_p = pi*.25*(Dp^2); %Area of pintle
A_out = A_f + A_p; %Area of outer circle
r_out = sqrt(A_out/pi); %radius of outer circle
D_out = 2*r_out; %diameter of outer circle

%Diameter of inner circle (oxidizer)
r_o = sqrt(A_o/pi); %radius of oxidizer slot
D_o = 2*r_o; %Diameter of oxidizer slot

%Skip Ratio of 1 is ideal for combustion efficiency
% from the skip ratio of 1 a pintle length can be calculated
SR = 1;
L_p = SR*Dp;

%slots for oxidizer
%number of slots*width*height should equal Area of oxidizer
%Aspect ratios of 5-10 typical or 2-3 in another more recent source
%number of slots 16 - 36 typical
%Blockage Factor (BF) is typically between .3 and .7 with lower value being
%BF = (N*squiggly_d)/(pi*Dp)

c_p = pi*Dp; %[m] circumference of pintle
N_p = 16; %initial selection 11/20, number of holes
```

```
BF = .5 % inital selection 11/20
%squiggly_d = (BF*c_p)/N_p; %[m] diameter of pintle holes
squiggly_d = .0015875 %set to 1/16 inch in commie
height_p = A_o/(squiggly_d*N_p); %[m] slot height
gap_d = (c_p - squiggly_d*N_p)/N_p % [m] gap between holes
AR_p = height_p/squiggly_d; %[m]
A_oc = squiggly_d*height_p*N_p; %[m^2]area of holes just calculated

%Bolt stress for connecting tip to injector plate
% using pressure inside pintle which is 108% of chamber pressure
% find force exerted on pintle tip from area of tip
%using ultimate tensile strength at 77K  of 1640 MPa find minimum area of
%rod

Ft_p = (1.08*Pc*1000)*A_p; %[N] force on inner tip
sigma_Y = 1640 * 10^6; % [Pa]Ultimate Tensile Stress at 77K In718
A_r1 = Ft_p/sigma_Y; % [m^2] Area of rod
r_r1 = sqrt(A_r1/pi); % [m] minimum radius of rod

%including Factor of safety of 2, FS = sigma_Y / sigma,
FS = 2; %Factor of safety
A_r = (Ft_p * FS)/sigma_Y; %[m^2] Area of rod FS of 2
r_r = sqrt(A_r/pi); %[m] minimum radius of rod FS 2
D_r = 2 * r_r; %[m] minimum diameter of rod FS 2

%due to threading a rod size of 3mm is selected
D_rs = .003; %[m]
A_rs = pi*(.5*D_rs)^2; %[m^2] area of rod
%Pintle oxidizer slot accounting for area occupied by tip rod
A_op = A_rs + A_o; %[m^2] area of oxidizer slot accounting for rod
r_op = sqrt(A_op/pi); %[m]radius of circular slot LOx
D_op = 2 * r_op; %[m] diameter of circular slot LOx

%Shows selected calculated values
T1
Tt
At
Ae
Is
c_star
Cf
Vc
Ae/At
```

```
clear; clc;
%INLET MANIFOLD CALCULATIONS
%CWidth= 0.004886; %[meters] coolant channel Width
%CLength = 0.001796; % [meters] coolant channel length
TotalArea = 472.43e-6; %[mm^2---> m^2] total cross sectional area of cooling channels
Channels = 62; % number of cooling channels
CArea = TotalArea/Channels; % [m^2] coolant channel area
%Notes:
%- density can change due to varying pressure and temperature
%- pressure will vary depending on manifold area
P1 = 4.551*(10^6); % [Mpa---> Pa] pressure at tubes , OPEN TO CHANGE, (or 660.06674 psi)
P2 = 4.551*(10^6); % [MPa---> Pa]desired pressure at nozzle entrance
Rho_M1 = 425.81; % [kg/m^3] at tubes/manifold, methane density @ 4.551 MPa WILL CHANGE IF
P1 CHANGES
Rho_M2 = 425.81 ; %[kg/m^3] at nozzle entrance, Methane density @ 4.551 MPa
V2 = 17.5; %[m/s] velocity at entrance of manifold
PTank = 4.82633; %[MPa] pressure in tank (up to change) or 700psi
M_dot = 0.98400; %[kg/s] mass flow rate throughout system

%from Bernoulii's equation
V1 = sqrt(( ((P2) + (0.5)*(Rho_M2)*( V2^2)) - (P1) ) / (0.5* Rho_M1));
%from continuity equation
 A1 = ( V2* TotalArea ) / V1; %area of tubes
%Goal: intersect manifold directly into cooling channels
Radius_Channel = 58.65; % radius from center of nozzle to bottom face of cooling channel
Radius_Nozzle_Inner = 57.83; %radius of nozzle exit
Radius_Nozzle_Outer = 61.945; %radius of total nozzle [mm]
Manifold_thickness = 0.8; % in [mm]
%---------------For Semi-Circular Manifold-------------------------
H = sqrt( (A1*(10^6))/pi); % Height of hose in mm
FlatFace = 2*sqrt( (A1*(10^6))/pi); % SemiCircle's Flat Face length
H_inches = H*0.0393701; % Height of hose in inches
fprintf('the diameter of a semi-circular hose will be: %d[mm] or %d[inches] and have a face length of
%d[mm]\n',H, H_inches, FlatFace);
%---------------For Circular Manifold-------------------------
D = 2*sqrt( (A1*(10^6))/pi); % Diameter of hose in mm
D_inches = D*0.0393701; % diameter of hose in inches
fprintf('the diameter of a circular hose will be: %d[mm] or %d[inches]\n',D, D_inches);
%---------------For Triangular manifold-----------------------
Tri_Side = sqrt ( (4/sqrt(3))*(A1*10^6)); % Triangle side in mm
Tri_Side_Inches = Tri_Side * 0.0393701; %triangle side in inches
fprintf('One side of a triangular hose will be: %d[mm] or %d[inches]',Tri_Side, Tri_Side_Inches);
```

d. Ansys Simulation Report

Velocity vs Position

Y [m]	Velocity u [m/s]
0.00E+00	2.31E+03
1.18E-03	2.31E+03
2.36E-03	2.31E+03
3.54E-03	2.30E+03
4.72E-03	2.27E+03
5.90E-03	2.22E+03
7.08E-03	2.19E+03
8.26E-03	2.19E+03
9.44E-03	2.18E+03
1.06E-02	2.18E+03
1.18E-02	2.18E+03
1.30E-02	2.18E+03
1.42E-02	2.18E+03
1.53E-02	2.17E+03
1.65E-02	2.17E+03
1.77E-02	2.17E+03
1.89E-02	2.17E+03
2.01E-02	2.16E+03
2.13E-02	2.16E+03
2.24E-02	2.16E+03
2.36E-02	2.15E+03
2.48E-02	2.15E+03
2.60E-02	2.15E+03
2.72E-02	2.15E+03
2.83E-02	2.14E+03
2.95E-02	2.14E+03
3.07E-02	2.14E+03
3.19E-02	2.13E+03
3.31E-02	2.13E+03
3.42E-02	2.13E+03

Density vs Position

Y [m]	Density [kg/m^3]
0.00E+00	6.37E-02
1.18E-03	6.32E-02
2.36E-03	6.19E-02
3.54E-03	6.35E-02
4.72E-03	8.21E-02
5.90E-03	1.12E-01
7.08E-03	1.30E-01
8.26E-03	1.37E-01
9.44E-03	1.41E-01
1.06E-02	1.44E-01
1.18E-02	1.47E-01
1.30E-02	1.50E-01
1.42E-02	1.53E-01
1.53E-02	1.56E-01
1.65E-02	1.59E-01
1.77E-02	1.62E-01
1.89E-02	1.64E-01
2.01E-02	1.67E-01
2.13E-02	1.70E-01
2.24E-02	1.72E-01
2.36E-02	1.75E-01
2.48E-02	1.78E-01
2.60E-02	1.80E-01
2.72E-02	1.83E-01
2.83E-02	1.85E-01
2.95E-02	1.88E-01
3.07E-02	1.91E-01
3.19E-02	1.94E-01
3.31E-02	1.96E-01
3.42E-02	1.99E-01

3.54E-02	2.12E+03
3.66E-02	2.12E+03
3.78E-02	2.11E+03
3.90E-02	2.11E+03
4.01E-02	2.11E+03
4.13E-02	2.10E+03
4.25E-02	2.10E+03
4.37E-02	2.10E+03
4.49E-02	2.09E+03
4.60E-02	2.09E+03
4.72E-02	2.08E+03
4.84E-02	2.08E+03
4.96E-02	2.05E+03
5.08E-02	1.95E+03
5.19E-02	1.90E+03
5.31E-02	1.85E+03
5.43E-02	1.37E+03
5.55E-02	4.70E+02
5.67E-02	-2.98E+01
5.78E-02	0.00E+00

3.54E-02	2.02E-01
3.66E-02	2.05E-01
3.78E-02	2.08E-01
3.90E-02	2.11E-01
4.01E-02	2.14E-01
4.13E-02	2.18E-01
4.25E-02	2.21E-01
4.37E-02	2.24E-01
4.49E-02	2.28E-01
4.60E-02	2.31E-01
4.72E-02	2.34E-01
4.84E-02	2.39E-01
4.96E-02	2.74E-01
5.08E-02	3.87E-01
5.19E-02	4.64E-01
5.31E-02	4.67E-01
5.43E-02	3.39E-01
5.55E-02	2.62E-01
5.67E-02	2.64E-01
5.78E-02	2.68E-01

Pressure vs Position

Y [m]	Pressure [Pa]
0.00E+00	1.23E+04
1.18E-03	1.22E+04
2.36E-03	1.18E+04
3.54E-03	1.23E+04
4.72E-03	1.80E+04
5.90E-03	2.79E+04
7.08E-03	3.41E+04
8.26E-03	3.64E+04
9.44E-03	3.76E+04
1.06E-02	3.88E+04

Temperature vs Position

Y [m]	Temperature [K]
0.00E+00	6.74E+02
1.18E-03	6.71E+02
2.36E-03	6.66E+02
3.54E-03	6.74E+02
4.72E-03	7.52E+02
5.90E-03	8.59E+02
7.08E-03	9.09E+02
8.26E-03	9.23E+02
9.44E-03	9.30E+02
1.06E-02	9.37E+02

1.18E-02	4.00E+04
1.30E-02	4.11E+04
1.42E-02	4.22E+04
1.53E-02	4.33E+04
1.65E-02	4.43E+04
1.77E-02	4.54E+04
1.89E-02	4.64E+04
2.01E-02	4.75E+04
2.13E-02	4.85E+04
2.24E-02	4.95E+04
2.36E-02	5.06E+04
2.48E-02	5.17E+04
2.60E-02	5.27E+04
2.72E-02	5.38E+04
2.83E-02	5.49E+04
2.95E-02	5.60E+04
3.07E-02	5.71E+04
3.19E-02	5.83E+04
3.31E-02	5.95E+04
3.42E-02	6.07E+04
3.54E-02	6.19E+04
3.66E-02	6.32E+04
3.78E-02	6.45E+04
3.90E-02	6.58E+04
4.01E-02	6.72E+04
4.13E-02	6.86E+04
4.25E-02	7.00E+04
4.37E-02	7.15E+04
4.49E-02	7.31E+04
4.60E-02	7.47E+04
4.72E-02	7.60E+04
4.84E-02	7.82E+04
4.96E-02	9.54E+04

1.18E-02	9.45E+02
1.30E-02	9.52E+02
1.42E-02	9.58E+02
1.53E-02	9.65E+02
1.65E-02	9.71E+02
1.77E-02	9.77E+02
1.89E-02	9.83E+02
2.01E-02	9.90E+02
2.13E-02	9.96E+02
2.24E-02	1.00E+03
2.36E-02	1.01E+03
2.48E-02	1.01E+03
2.60E-02	1.02E+03
2.72E-02	1.03E+03
2.83E-02	1.03E+03
2.95E-02	1.04E+03
3.07E-02	1.04E+03
3.19E-02	1.05E+03
3.31E-02	1.05E+03
3.42E-02	1.06E+03
3.54E-02	1.07E+03
3.66E-02	1.07E+03
3.78E-02	1.08E+03
3.90E-02	1.09E+03
4.01E-02	1.09E+03
4.13E-02	1.10E+03
4.25E-02	1.10E+03
4.37E-02	1.11E+03
4.49E-02	1.12E+03
4.60E-02	1.12E+03
4.72E-02	1.13E+03
4.84E-02	1.14E+03
4.96E-02	1.21E+03

5.08E-02	1.56E+05
5.19E-02	1.98E+05
5.31E-02	2.13E+05
5.43E-02	2.23E+05
5.55E-02	2.22E+05
5.67E-02	2.21E+05
5.78E-02	2.21E+05

5.08E-02	1.40E+03
5.19E-02	1.49E+03
5.31E-02	1.59E+03
5.43E-02	2.31E+03
5.55E-02	2.95E+03
5.67E-02	2.92E+03
5.78E-02	2.89E+03

Title

2D Flow Through Pubworks Enginer

Author

Christopher Henderson

Date

2020/04/05 13:19:54

Contents

1. File Report
Table 1 File Information for FFF
2. Mesh Report
Table 2 Mesh Information for FFF
Table 3 Mesh Statistics for FFF
3. Physics Report
Table 4 Domain Physics for FFF
Table 5 Boundary Physics for FFF
4. User Data
Chart 1

1. File Report

Table 1. File Information for FFF

Case	FFF
File Path	C:\Users\Chris\Desktop\CFD Files\2d_Engine_Revised_files\dp0\FFF\Fluent\FFF.1-1-04500.dat.gz
File Date	27 March 2020
File Time	02:01:40 PM
File Type	FLUENT
File Version	20.1.0

2. Mesh Report

Table 2. Mesh Information for FFF

Domain	Nodes	Elements
pubactualcfd2dplanar	142444	70380

Table 3. Mesh Statistics for FFF

Domain	Minimum Face Angle	Maximum Face Angle	Maximum Edge Length Ratio	Maximum Element Volume Ratio	Connectivity Range	
pubactualcfd2dplanar	38.426 [degree]	141.574 [degree]	80.3969	15.5952	1	4

3. Physics Report

Table 4. Domain Physics for FFF

Domain - pubactualcfd2dplanar	
Type	cell

Table 5. Boundary Physics for FFF

Domain	Boundaries	
pubactualcfd2dplanar	**Boundary - far_field**	
	Type	WALL
	Boundary - nozzle_wall	
	Type	WALL
	Boundary - periodic 1	
	Type	PERIODIC
	Boundary - periodic 1 shadow	
	Type	PERIODIC
	Boundary - pinlet	
	Type	VELOCITY-INLET
	Boundary - poutlet	
	Type	PRESSURE-OUTLET
	Boundary - sem_axis	
	Type	AXIS
	Boundary - wall pubactualcfd2dplanar	
	Type	WALL

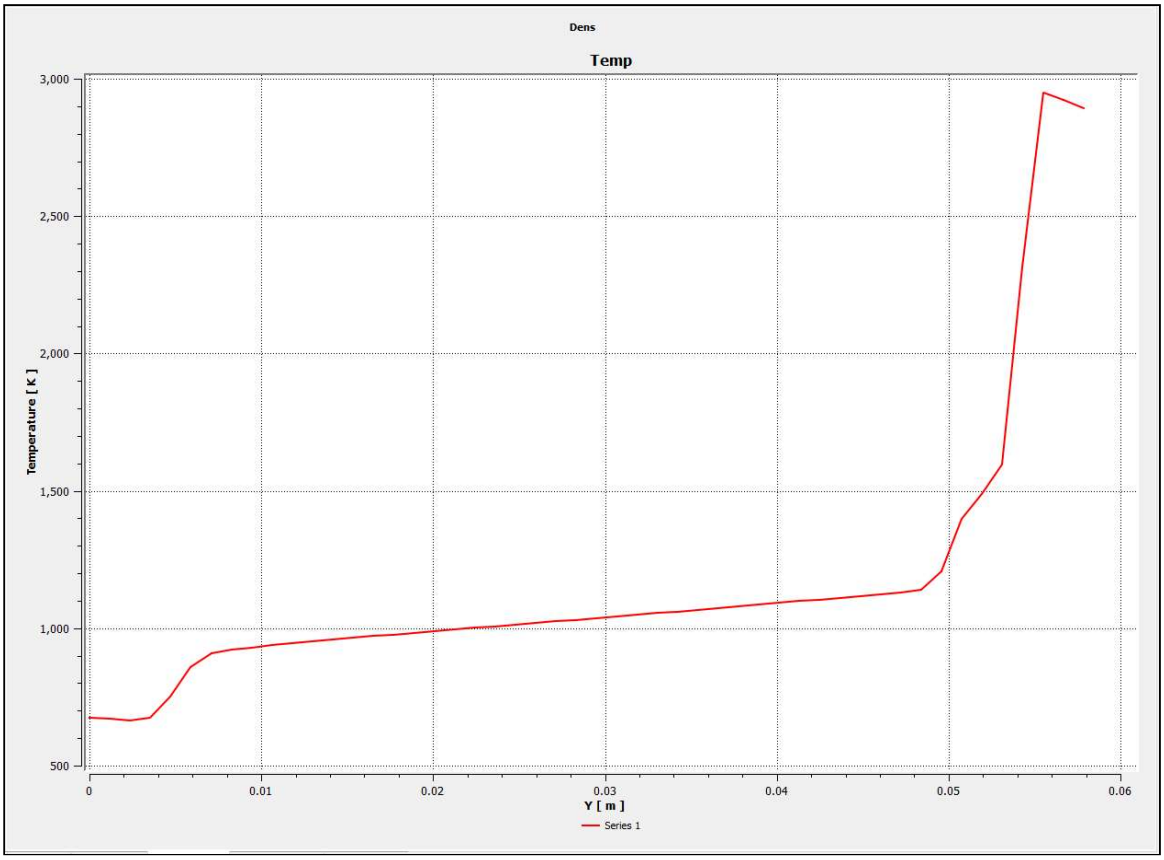
Dens
Temp
Temperature [K]
3,000
2,500
2,000
1,500
1,000
500
0
0.01
0.02
0.03
0.04
0.05
0.06
Y [m]
Series 1

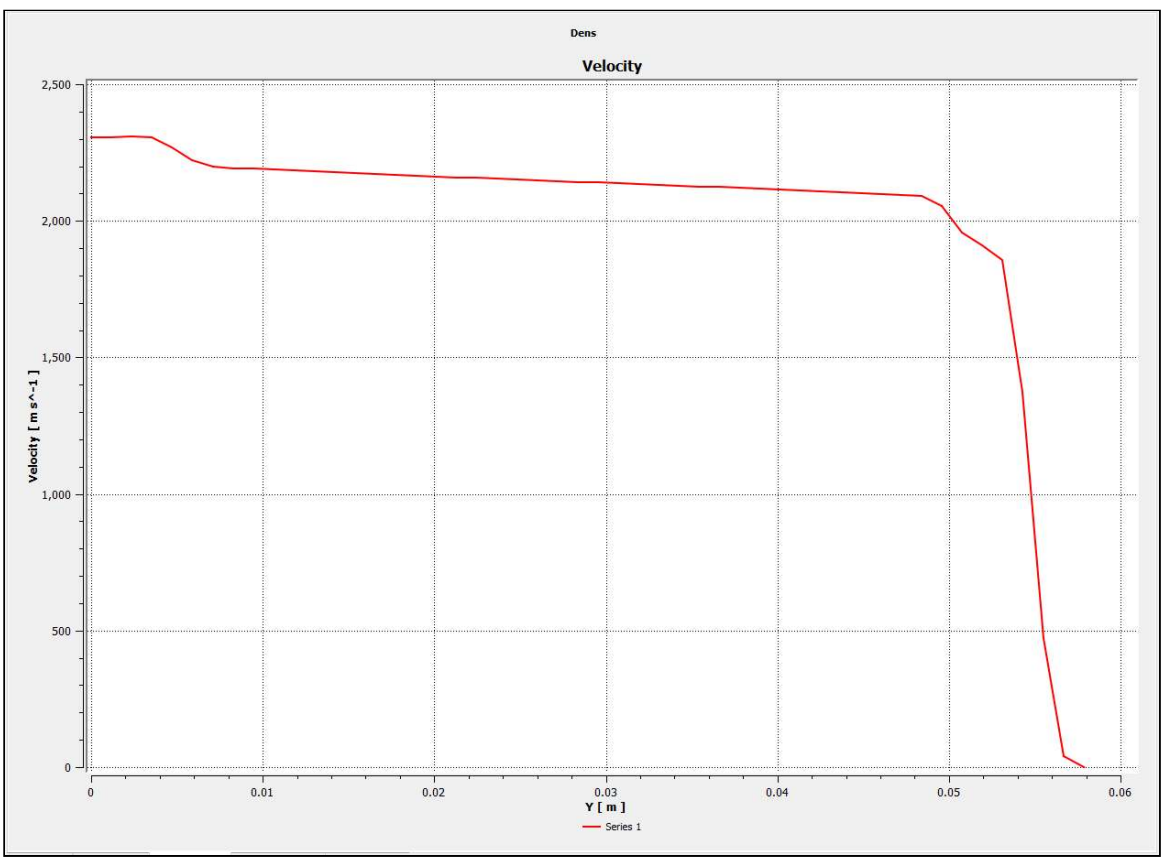
Dens
Velocity
Velocity [m s^-1]
2,500
2,000
1,500
1,000
500
0
0
0.01
0.02
0.03
0.04
0.05
0.06
Y [m]
Series 1

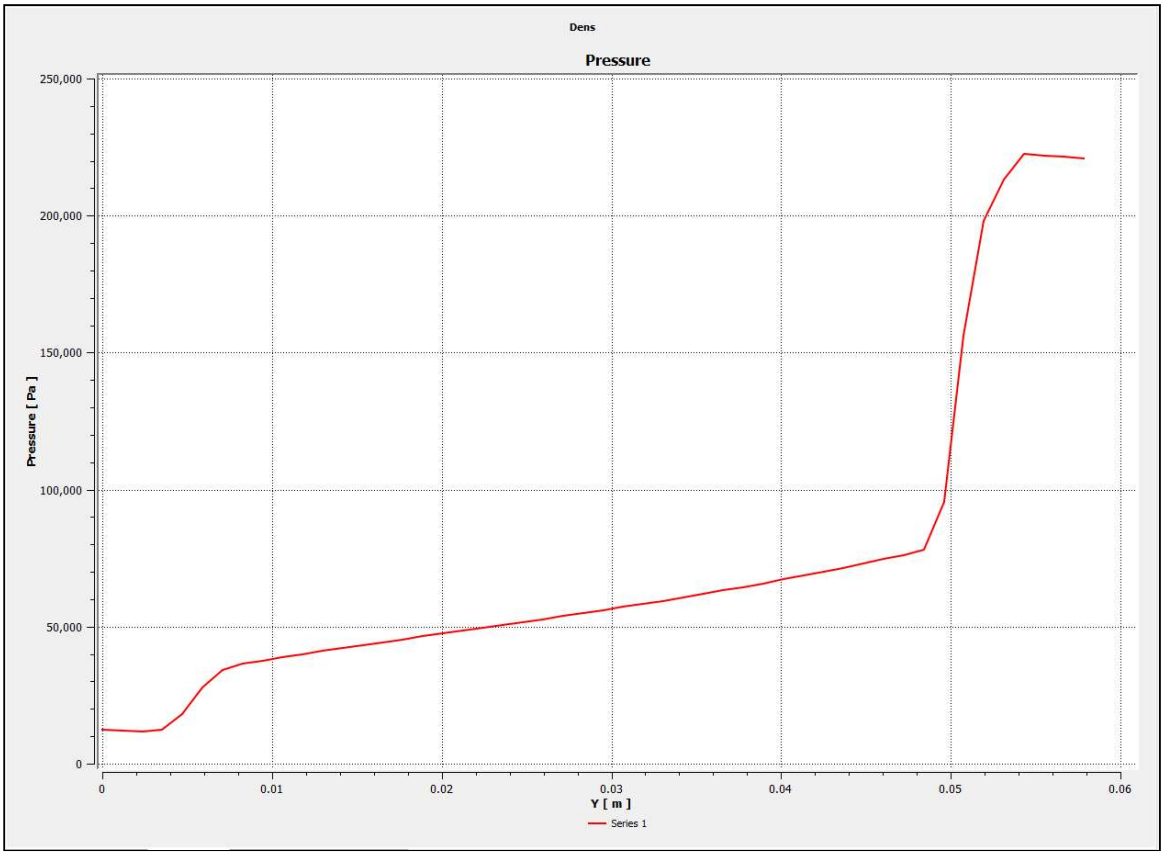
Dens
Pressure
250,000
200,000
150,000
100,000
50,000
0
Pressure [Pa]
0
0.01
0.02
0.03
0.04
0.05
0.06
Y [m]
Series 1