Preliminary Design Report

Regenerative Cooling Liquid Rocket Engine

Version 1.0 – Revised 12/15/2019

Authors:

Alexia Louis

Brandon Sheehan

Christopher Henderson

Eric Aguilar

NOMENCLATURE

CAD: Computer Aided Design

PDR: Preliminary Design Review

CDR: Critical Design Review

WBS: Work Breakdown Structure

FEA: Finite Element Analysis

FEM: Finite Element Modeling

SAR: Systems Acceptance Review

SOW: Statement of Work

Isp: Specific Impulse

NASA CEA: NASA Chemical Equilibrium Analysis

RPA: Rocket Propulsion Analysis

SRD: Systems Requirements Document

SRR: Systems Requirements Review

TCD: Test Control Document

IAW: In Accordance With

TMR: Total Momentum Ratio

BF: Blockage Factor

SR: Skip Ratio

TPM: Technical Performance Measures

V&V: Verification & Validation

ANSYS: Analysis System

RPE: Rocket Propulsion Elements

Executive Summary

In our Preliminary Design Report we will discuss the design process from our Systems Requirements Review to our Preliminary Design. We will explain how our main customer requirements decompose to engineering requirements and how they transfer and define our subsystems. Along with the identification of our subsystems, we will also illustrate how our design was created through mathematical iterations used to obtain desired parameters and trade studies conducted during the selection process of our systems. First the design will be addressed on the system level and subsequently the subsystems will be addressed. This includes scope, requirements, system overview, verification methods, and design methodology.

Table of Contents

Executive Summary **3**

Introduction **5**
- Project scope 5
- Customer Requirements 5

System Preliminary Design **5**
- System Overview 5
- System Design Methodology 7
- Assumptions 7
- Trade Studies and Baseline Selection 8

Injector **8**
- Injector Requirements 8
- Injector Overview 9
- Injector Design Methodology 9
- Trade Studies and Injector Baseline Selection 10
- Injector Requirements Verification 10

Thrust Chamber **10**
- Thrust Chamber Requirements 10
- Thrust Chamber Overview 11
- Thrust Chamber Design Methodology 11
- Trade Studies and Thrust Chamber Baseline Selection 12
- Thrust Chamber Requirements Verification 12
- Cooling System Requirements 12
- Cooling System Overview 13
- Cooling System Design Methodology 13
- Trade Studies and Cooling System Baseline Selection 14
- Cooling System Requirements Verification 15

Test Stand **16**
- Test Stand Requirements 16
- Test Stand Overview 17
- Test Stand Design Methodology 17
- Trade Studies and Test Stand Baseline Selection 18
- Test Stand Requirements Verification 18
- Summary 19
- Next Phase WBS 19

Appendices **20**
- Individual Contributions 20

References **28**

Regenerative Cooling Liquid Rocket Engine

1. Introduction

1.1. Project scope

To maintain nozzle efficiency of 99% by reducing heat loss in the combustion chamber and maintaining geometric integrity throughout the engine

1.2. Customer Requirements

Thrust: 10,000N
Reusability: 2+ Launches

2. System Preliminary Design

2.1. System Overview

1.1.1. Regenerative methalox rocket engine that can be used for multiple launches

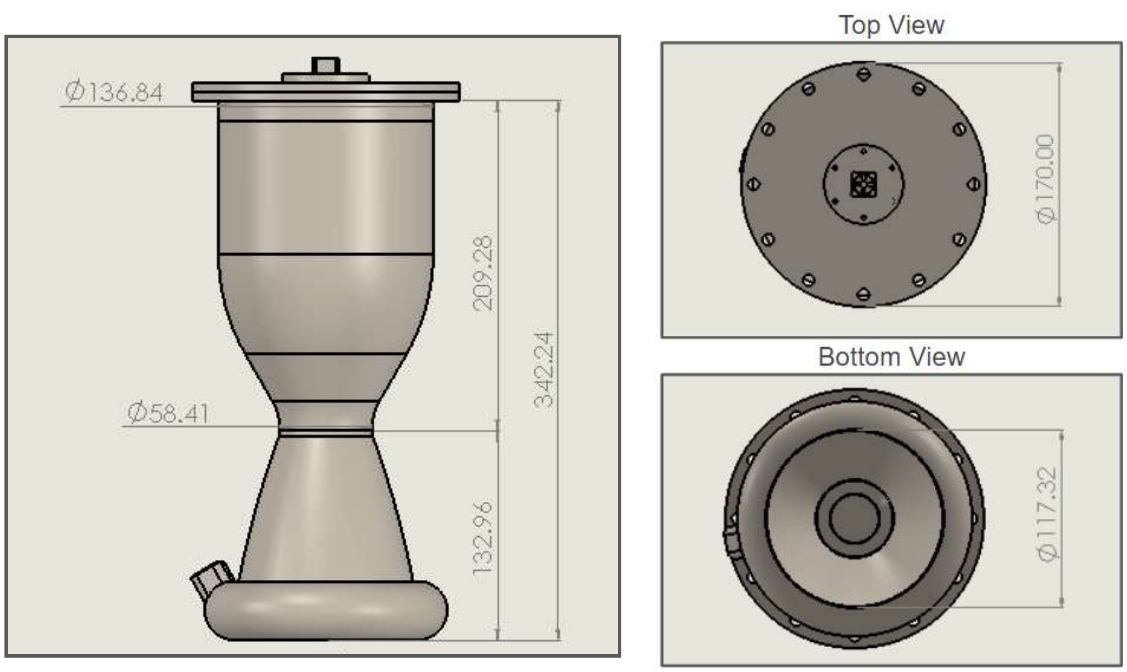

Figure 1. System Physical Layout
*Dimensions in mm

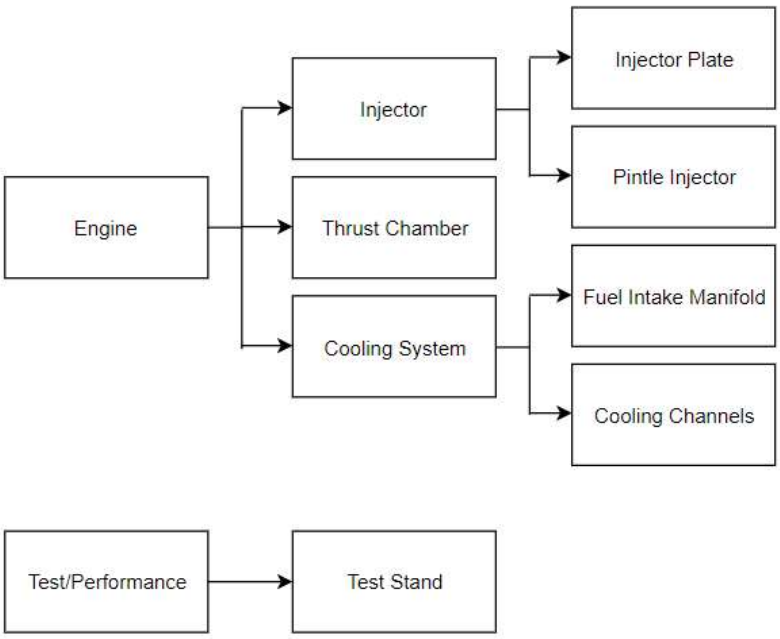

Figure 2. System Definition

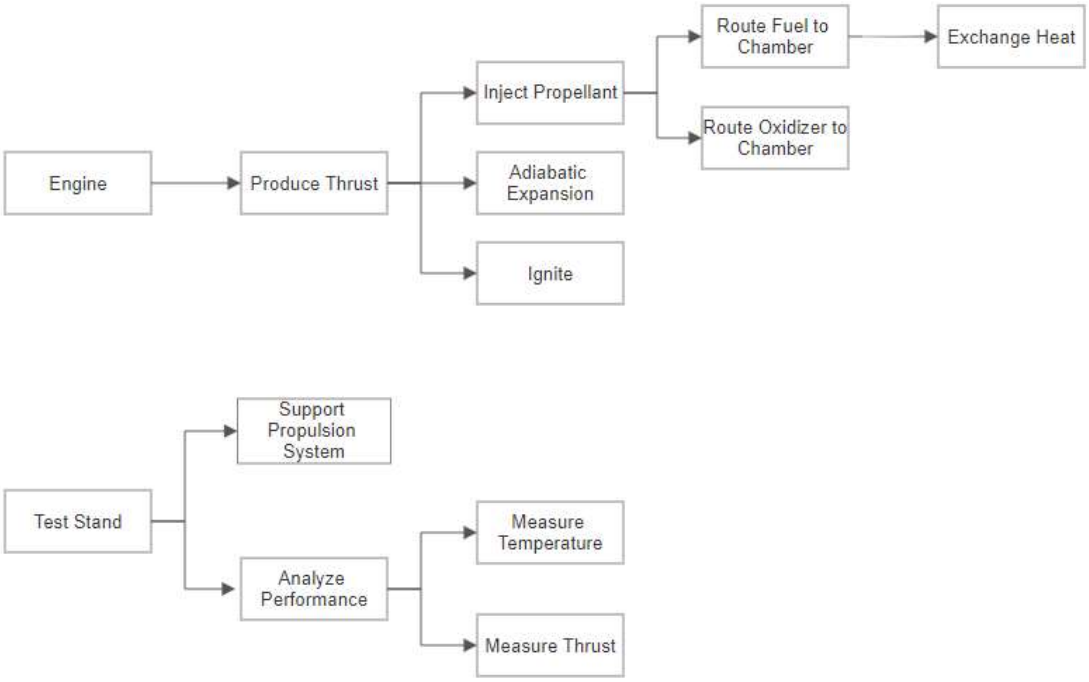

Figure 3. Functional Flow Block Diagram

Volume	732.896 cubic centimeters
Thrust	10,000N
Material	Inconel 718
Isp	301s (Vac)
Max Heat Flux (At Throat)	25,145.6242kJ/m^3

Table 1. System Performance and Characteristics

Subsystem	Allocated CoDR/SRR Mass (kg)	Current Mass %	Current Mass (kg)	Growth Allowance (%)	Estimated Allowance (kg)	Predicted Mass (kg)
Injector	1.5	49	3.091	-20	-0.621	2.47
Thrust Chamber	9	40	2.472	-12	-0.297	2.175
Cooling System (Manifold)	1.5	3	0.1902	10	0.019	0.3092
Test Stand	N/A	N/A	174.086	12	20.89	195.976
Total Allocated	15	92	180.27	-10	18.027	198.297
Margin	0	8	14.422	7	12.619	27.041
System Total	15	100	194.692	-3	-5.408	225.339

Table 2. System Mass Distribution

2.2. System Design Methodology

2.2.1. Assumptions

2.2.1.1. Ideally Expanded Nozzle
2.2.1.2. Incompressible Flow of Oxidizer and Fuel
2.2.1.3. Thermodynamic Isentropic Relations

2.2.2. Desired Parameters

2.2.2.1. Thrust: 10,000N
2.2.2.1.1. From customer requirements
2.2.2.2. Chamber Pressure: 500psi
2.2.2.2.1. From historical data of similar sized engines
2.2.2.3. O/F: 2.8
2.2.2.3.1. Iterations of heat transfer capabilities of material and cooling system

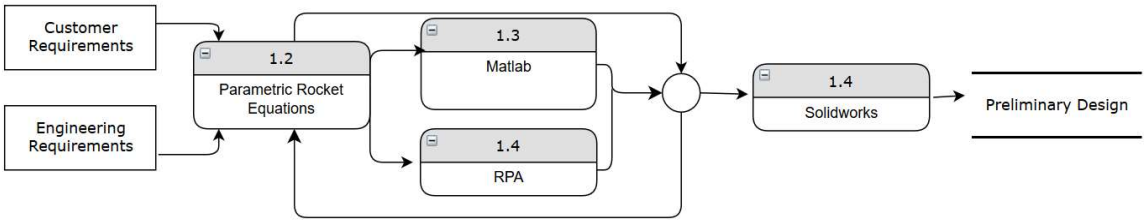

Figure 4. System Design Methodology

2.2.3. Process Description

2.2.3.1. Given customer and engineering requirements, the parametric rocket design equations *Appendix A* were used to obtain throat to chamber area ratio, throat to exit ratio, Isp, characteristic velocity, exit velocity, throat pressure, and exit pressure.

2.2.3.2. These values were then used with RPA to design optimized engine contour. RPA was also used to run iterations of heat transfer on the cooling system to determine engine temperature as a function of location and heat flux as a function of location.

2.2.3.3. With sufficient heat transfer obtained, Solidworks was then used to fully design the engine.

2.3. Trade Studies and Baseline Selection

Options		**Ablative**		**Regenerative**		**Film Cooling**	
Categories	**Weights**	**Value (1 - 5)**	**Score**	**Value (1 - 5)**	**Score**	**Value (1 - 5)**	**Score**
Affordability*	25%	4	1	3	.75	3	.75
Simplicity*	25%	4	1	2	.5	3	.75
Reusability	50%	1	.5	4	2	3	1.5
Total Score	**100.00%**	(Total Score)/5 = 50.0%		(Total Score)/5 = **65.0%**		(Total Score)/5 = 60.0%	

Favorability Scale: 1 (Least) - 5 (Most)

* Taking design and/or manufacturing process into consideration

3. Injector

3.1. Injector Requirements

3.1.1. Performance Requirements

3.1.1.1. To inject fuel and oxidizer into the thrust chamber

3.1.1.2. To properly atomize fuel

3.2. Injector Overview

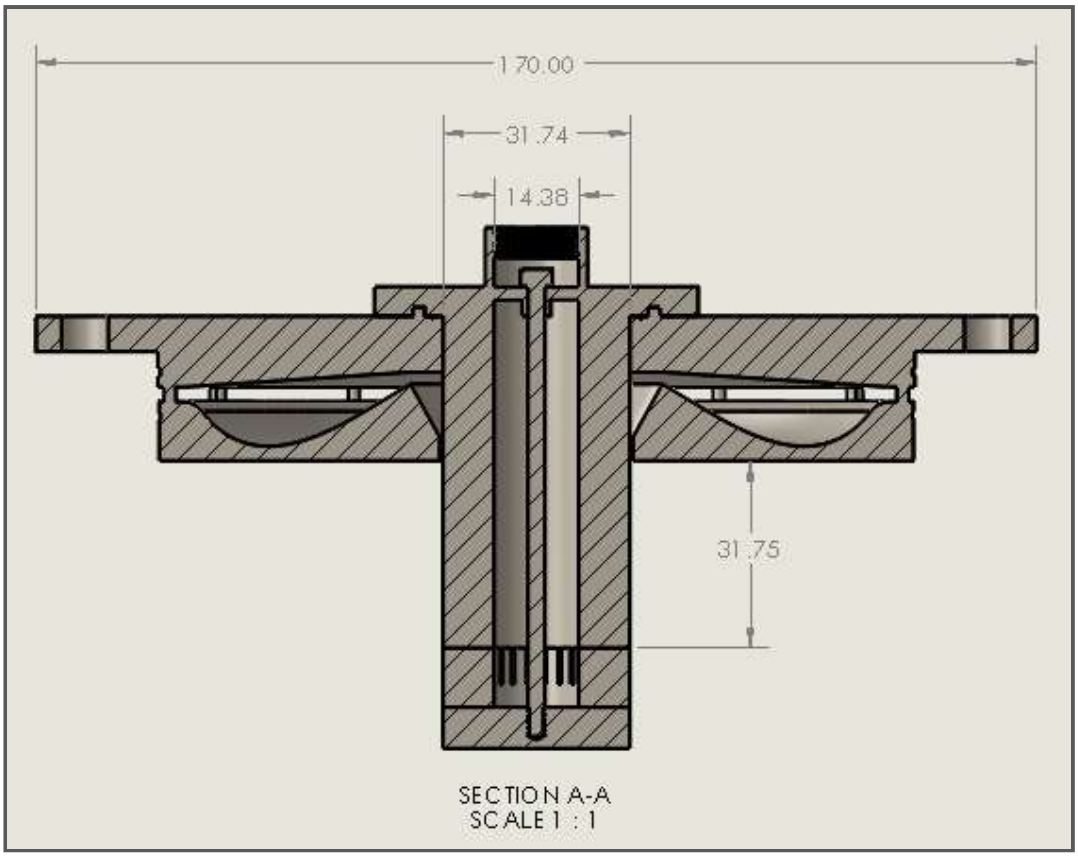

Figure 5. Injector Sectioned View
*Dimensions in mm

3.3. Injector Design Methodology

With the selected O/F ratio and the mass flow rates for propellants, pintle design equations were used utilizing MatLab (Appendix C) to find the injection velocities in order to get as close to the Total Momentum Ratio (TMR) of 1. Once suitable velocities were found the injection areas for the slotted ring and fuel anuluis were found. Taking into account pintle design parameters the overall dimensions were found and exported to Solidworks.

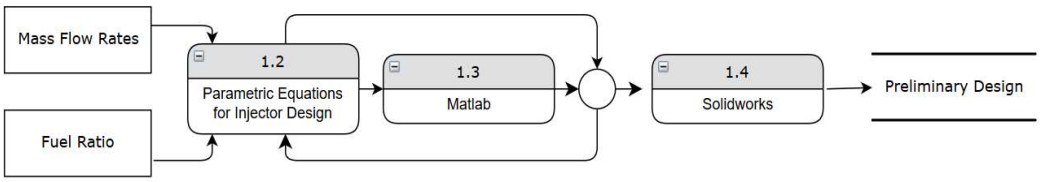

Figure 6. Injector Design Methodology Flowchart

3.4. Trade Studies and Injector Baseline Selection

Options		Centripetal		Pintle		Showerhead	
Categories	**Weights**	**Value (1 - 10)**	**Score**	**Value (1 - 10)**	**Score**	**Value (1 - 10)**	**Score**
Combustion Stability	30%	8	2.4	10	3	5	1.5
Simplicity	20%	4	.8	7	1.4	4	.8
Reusability	50%	8	4	8	4	7	3.5
Total Score	**100.00%**	7.2		8.4		5.8	

3.5. Injector Requirements Verification

Requirement ID	Description	V&V Method	Notes
3.1.1.1.	Fuel Mass Flow Rate	Test and Measurement	Cold Flow Test Test Fire
3.1.1.2.	Oxidizer Mass Flow Rate	Test and Measurement	Cold Flow Test Test Fire
3.1.1.3.	Droplet Size	Test and Measurement	Cold Flow Test Test Fire

4. Thrust Chamber

4.1. Thrust Chamber Requirements

4.1.1. Performance Requirements

4.1.1.1. 10,000 N Thrust

4.1.2. Design Constraints

4.1.2.1. 500psi chamber pressure

4.1.2.2. Choked flow at throat

4.1.2.3. Ideal expansion of exhaust gasses through nozzle

4.2. Thrust Chamber Overview

4.2.1. Thrust chamber with optimized 80% parabolic nozzle

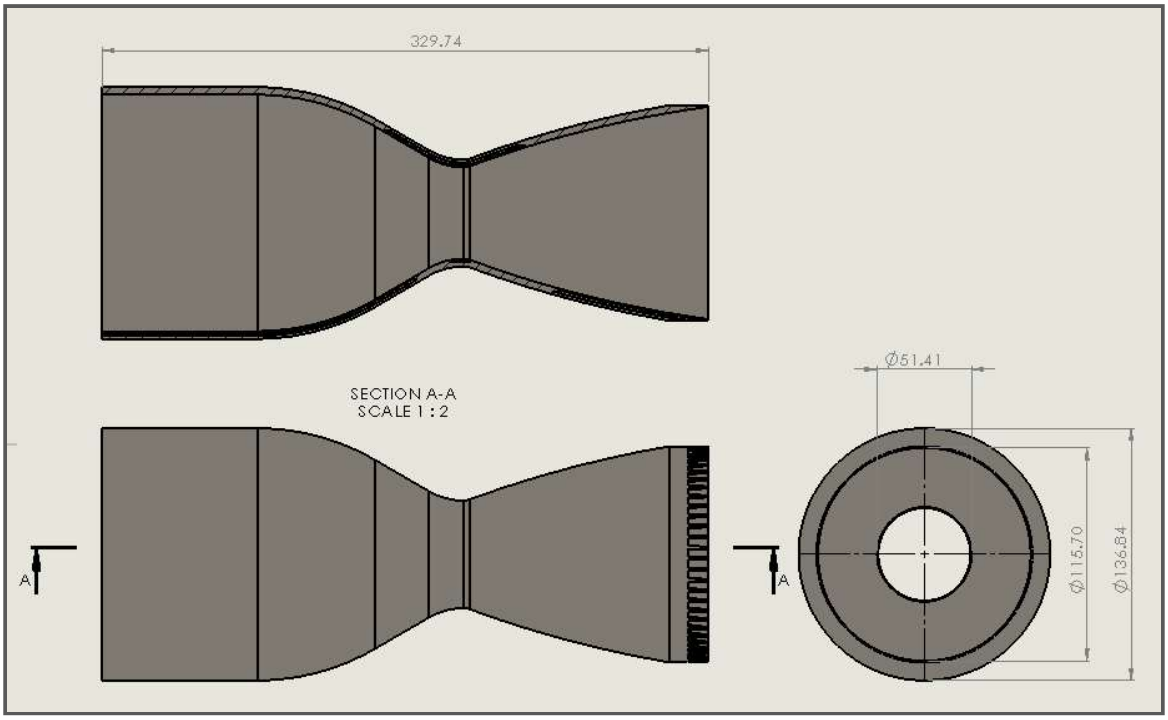

Figure 7. Thrust Chamber Physical Layout
*Dimensions in mm

4.3. Thrust Chamber Design Methodology

4.3.1. With methane and oxygen selected as fuel, Nasa CEA and the parametric rocket design equations were used to in conjunction with Matlab to design the ideal rocket parameters that meet our requirements. The ideal parameters were used in RPA to design a contour for the thrust chamber as well as conduct heat transfer analysis. This was done in iterations during both stages to meet requirements.

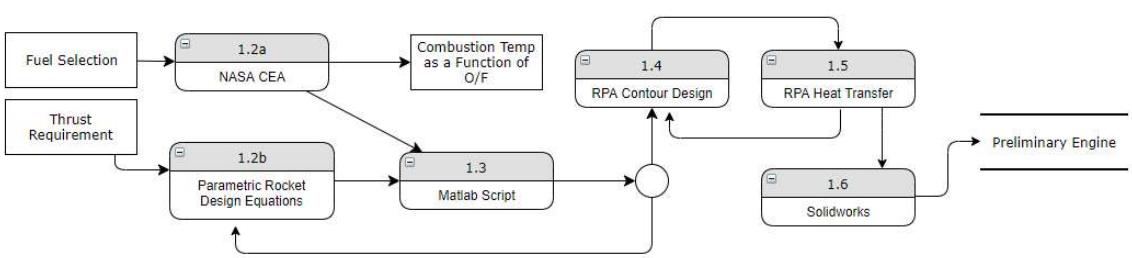

Figure 8. Thrust Chamber Design Methodology Flowchart

4.4. Trade Studies and Thrust Chamber Baseline Selection

4.4.1. Thrust Chamber Material Trade Study

Options		Copper Alloy		Inconel 718		Inconel 625	
Categories	**Weights**	**Value (1 - 10)**	**Score**	**Value (1 - 10)**	**Score**	**Value (1 - 10)**	**Score**
Melting Range	35%	6	2.1	10	3.5	10	3.5
Thermal Conductivity	25%	10	2.5	6	1.5	5	1.25
Tensile/Yield Strength	20%	5	1	10	2	9	1.8
Ease of manufacturing	20%	2	.4	6	1.2	6	1.2
Total Score	**100.00%**	(Total Score)/10 = 60.00%		(Total Score)/10 = 82.0%		(Total Score)/10 = 77.5%	

4.5. Thrust Chamber Requirements Verification

Requirement ID#	Description	V&V Method	Notes
4.1.1.1	10,000N of Thrust	Test & Analysis	Test Fire

5. Cooling System

5.1. Cooling System Requirements

5.1.1. Performance Requirements

5.1.1.1. Maintain a fuel mass flow rate of 0.9776 kg/s within the cooling channels and manifold

5.1.1.2. Transfer heat away from engine throat

5.1.1.3. Ensure optimal pressure drop and flow velocities across cooling channels

5.1.2. Design Constraints

5.1.2.1. Pressure at Cooling Channels must have an exit pressure of 4.081MPa

5.1.2.2. Temperature must not exceed Inconel 718 minimum melting point of 1643.15K

5.1.2.3. Manifold and Cooling Channels must have wall thickness of 0.8mm

5.2. Cooling System Overview

5.2.1. Cooling Channels with varying cross sectional area

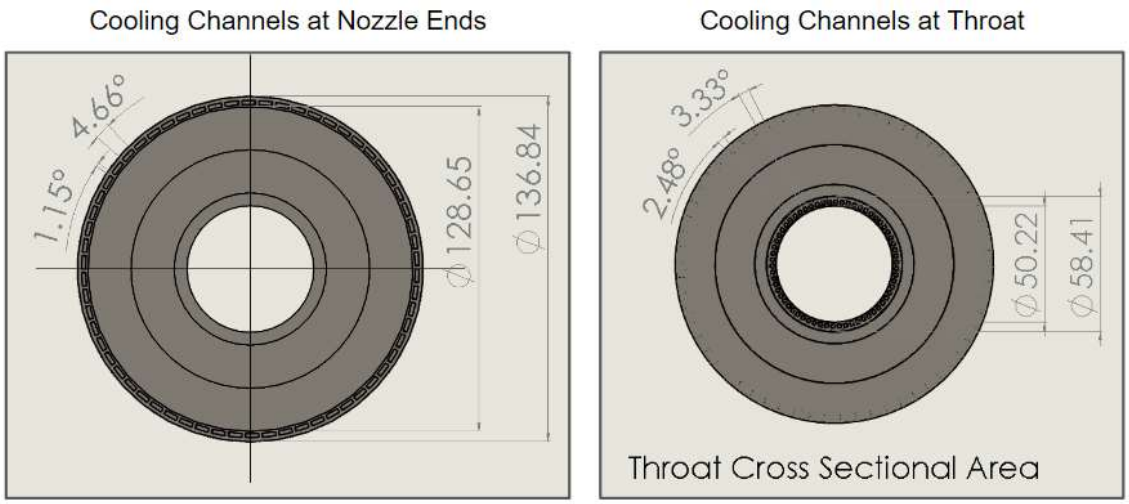

Figure 9: Cooling Channels Physical Layout

5.2.2. Torus shaped Inlet Manifold fitted for engine nozzle

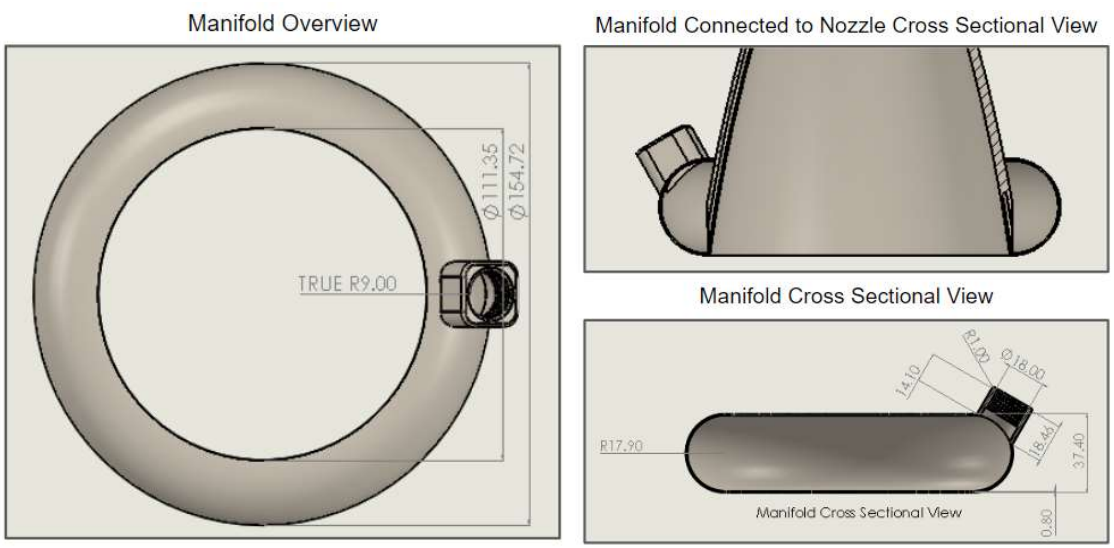

Figure 10: Manifold Physical Layout

5.3. Cooling System Design Methodology

5.3.1. Four initial parameters, Fuel Mass Flow Rate, Specific Heat Capacity of CH4, Combustion Temperature, and Thermal Conductivity of Inconel 718, were inputted into RPA to develop multiple Cooling Channel cross sectional area dimensions at varying locations of the Engine wall. The

inlet manifold was then designed based on the sum of the cross sectional area of the cooling channels at the entrance nozzle. Iterations were implemented into RPA to satisfy changes in the the four initial parameters. Once the final Cross Sectional and Inlet Manifold dimensions were established, 3D models were created utilizing Solidworks.

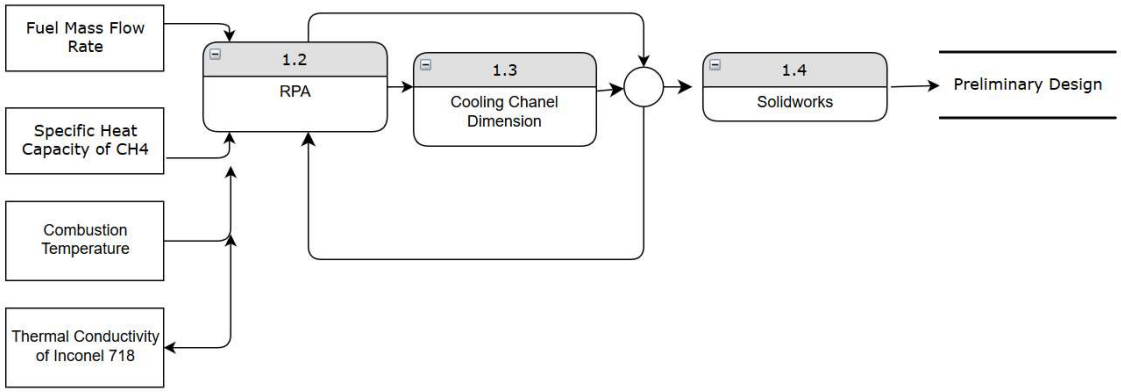

Figure 11: Cooling System Design Methodology FlowChart

5.4. Trade Studies and Cooling System Baseline Selection

Options		**Triangular**		**Circular**		**Semicircle**	
Categories	**Weights**	**Value (1 - 10)**	**Score**	**Value (1 - 10)**	**Score**	**Value (1 - 10)**	**Score**
Wall Stress Distribution	40%	5	2	10	4	8	3.2
Required Material (cost)	30%	7	2.1	5	1.5	10	3
Implementation	15%	9	1.35	5	0.75	8	1.2
Simplicity (Pressure and Velocity Calculations)	15%	5	0.75	10	1.5	8	1.2
Total Score	**100.00%**	(Total Score)/10 = 62.00%		(Total Score)/10 = 77.50%		(Total Score)/10 = **86.00%**	

5.5. Cooling System Requirements Verification

5.5.1. Cooling System Requirements Verification Table

Requirement ID#	Requirement	V&V Method	Notes
5.1.1.1	Fuel Mass Flow Rate	Test and Measurement	Cold Flow Test
5.1.1.2	Heat Transfer	Calculations	RPA analysis
5.1.1.3	Pressure drop and flow velocities	Cross Sectional area measurement	Solidworks Evaluations

5.5.2. Cooling System Heat Transfer Verification Graph

5.5.2.1. Figure 13 indicates that the engine will experience a maximum temperature of 1230.48 Kelvin which demonstrates that our cooling system successfully maintains an engine temperature under Inconel 718's melting point, 1643.15 Kelvin.

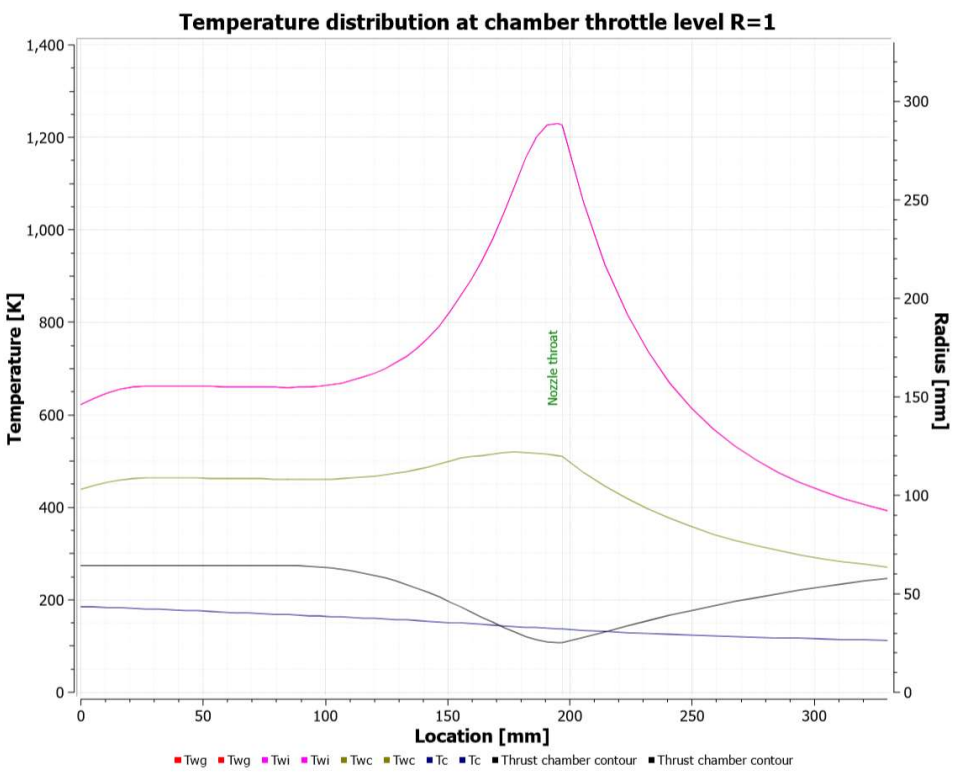

Figure 12. Temperature Distribution Graph

Results of steady-state thermal analysis at chamber throttle level R=1.000

Location, m	Radius, mm	Conv. heat	Conv. heat	Rad. heat fl	Total heat f	Twg, K	Twi, K	Twc, K	Tc, K	pc, MPa	wc, m/s
119.95	59.33	2.3548	6467.5557	1320.3679	7787.9236	690.24	690.24	467.38	159.49	4.171	37.41
124.37	57.96	2.4622	6738.1032	1311.1593	8049.2625	700.15	700.15	469.85	158.38	4.175	38.19
128.79	56.42	2.5925	7062.4136	1307.8607	8370.2743	712.60	712.60	473.12	157.24	4.179	39.16
133.21	54.69	2.7494	7449.8680	1301.9693	8751.8373	727.13	727.13	476.83	156.08	4.184	40.36
137.63	52.77	2.9436	7923.3784	1295.4060	9218.7844	745.08	745.08	481.47	154.88	4.189	41.82
142.05	50.65	3.1817	8494.7440	1294.0239	9788.7680	766.92	766.92	487.05	153.64	4.194	43.63
146.47	48.31	3.4785	9196.8784	1281.9928	10478.8711	792.86	792.86	493.30	152.36	4.200	45.87
150.89	45.78	3.8495	10056.0362	1270.8114	11326.8476	824.46	824.46	500.68	151.02	4.208	48.64
155.31	43.23	4.2861	11049.2397	1262.2639	12311.5036	858.87	858.87	507.14	149.65	4.216	50.34
159.73	40.68	4.8031	12212.6584	1242.2408	13454.8992	894.09	894.09	509.63	148.25	4.225	48.70
164.14	38.12	5.4165	13552.6876	1225.6350	14778.3226	934.69	934.69	512.44	146.84	4.235	47.93
168.56	35.57	6.1537	15109.3313	1204.6462	16313.9775	981.44	981.44	515.34	145.40	4.246	47.97
172.98	33.02	7.0476	16926.6766	1171.9433	18098.6199	1035.01	1035.01	517.93	143.95	4.258	48.82
177.40	30.47	8.1413	19057.0569	1116.7995	20173.8564	1095.99	1095.99	519.61	142.48	4.272	50.59
181.82	28.21	9.3178	21252.2238	1039.2564	22291.4802	1155.96	1155.96	519.09	141.03	4.289	52.83
186.24	26.62	10.2641	22958.8329	950.4625	23909.2954	1199.97	1199.97	516.81	139.65	4.308	55.00
190.66	25.61	10.8681	24023.0300	848.9172	24871.9472	1226.36	1226.36	515.70	138.32	4.329	58.10
195.08	25.15	11.0512	24382.3319	758.3175	25140.6495	1230.48	1230.48	512.13	137.01	4.351	59.49
196.78	25.11	11.0012	24321.4424	730.2123	25051.6547	1225.97	1225.97	510.18	136.51	4.360	59.51
205.62	27.71	8.4566	20094.0371	366.1659	20460.2030	1060.65	1060.65	476.03	133.99	4.400	50.46
214.45	30.79	6.5538	16466.8831	257.2336	16724.1166	924.21	924.21	446.31	131.59	4.429	42.71
223.29	33.71	5.2572	13761.0588	208.7507	13969.8095	819.19	819.19	419.94	129.40	4.450	37.22
232.13	36.48	4.3288	11690.8926	179.9255	11870.8181	736.06	736.06	396.72	127.39	4.466	33.14
240.97	39.10	3.6435	10084.2985	158.4640	10242.7625	668.99	668.99	376.09	125.54	4.480	29.99
249.81	41.57	3.1262	8823.1931	141.2295	8964.4227	614.47	614.47	358.01	123.83	4.491	27.50
258.65	43.90	2.7266	7817.3885	129.1921	7946.5806	569.68	569.68	342.21	122.23	4.501	25.49
267.48	46.09	2.4131	7008.3777	117.5111	7125.8888	532.51	532.51	328.40	120.73	4.509	23.83
276.32	48.14	2.1627	6347.8827	109.2725	6457.1552	501.68	501.68	316.58	119.31	4.517	22.45
285.16	50.07	1.9605	5804.7822	101.4633	5906.2456	475.84	475.84	306.42	117.97	4.524	21.28
294.00	51.86	1.7950	5354.2103	94.8606	5449.0708	453.90	453.90	297.47	116.69	4.530	20.29
302.84	53.53	1.6585	4978.2278	89.6437	5067.8715	435.22	435.22	289.61	115.46	4.535	19.44
311.68	55.07	1.5451	4662.5136	84.9398	4747.4534	419.19	419.19	282.68	114.29	4.541	18.71
320.51	56.49	1.4502	4396.0396	81.3297	4477.3693	405.42	405.42	276.57	113.15	4.546	18.07
329.74	57.85	1.3666	4159.8552	77.6143	4237.4695	392.92	392.92	270.88	112.00	4.551	17.50

Figure 13: RPA Temperature Analysis Results

6. Test Stand

6.1. Test Stand Requirements

6.1.1. Functional Requirements

6.1.1.1. Secure engine

6.1.1.2. Secure necessary sensors

6.1.2. Performance Requirements

6.1.2.1. Fluid analysis within cooling channels and injector in cold fire

6.1.2.2. Analyze thrust produced and wall temperature at chamber and throat

6.1.3. Operational Requirements

6.1.3.1. Feed propellant to engine

6.1.3.2. Safely direct hot gases

6.1.3.3. Automatic/Manual emergency water deluge fire extinguishing system

6.1.3.4. Remote system control

6.2. Test Stand Overview

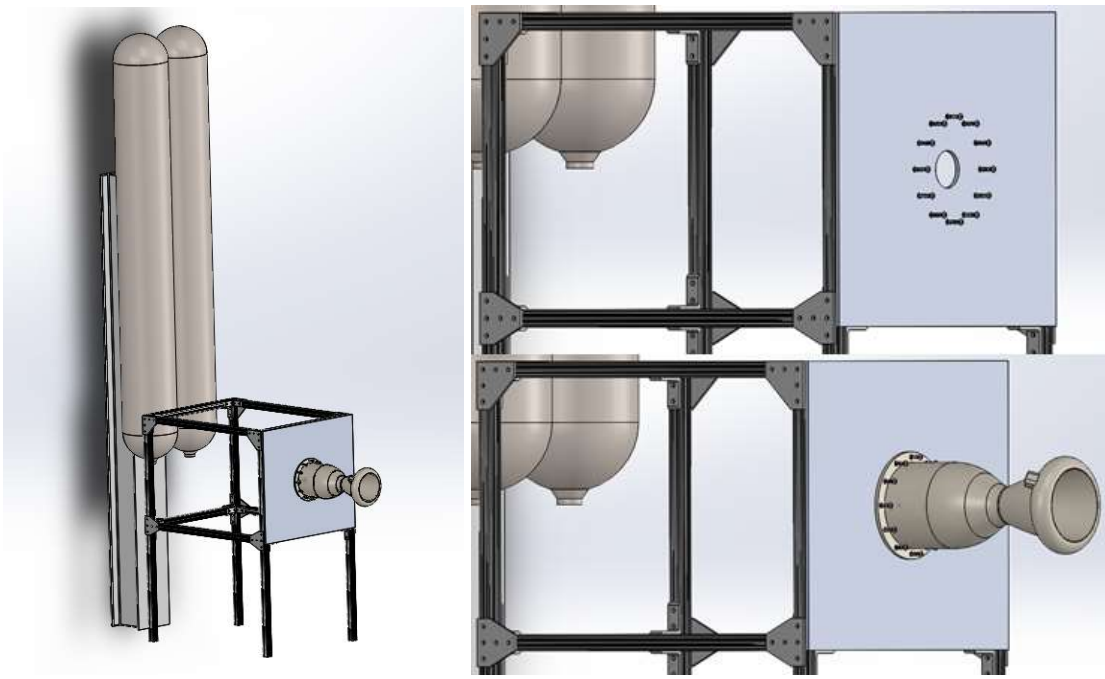

Figure 14: Test Stand Physical Layout

6.3. Test Stand Design Methodology

6.3.1. With the known engine dimensions, engine thrust, and required instrumentations, a test stand was designed with Aluminum T-slotted framing and an aluminum 6061 mounting plate.The test stand has a dedicated rectangular section behind the mounting plate for plumbing and instrumentations. Multiple holes were included in the Aluminum 6061 mounting plate to ensure a secure connection with the Engine's injector.

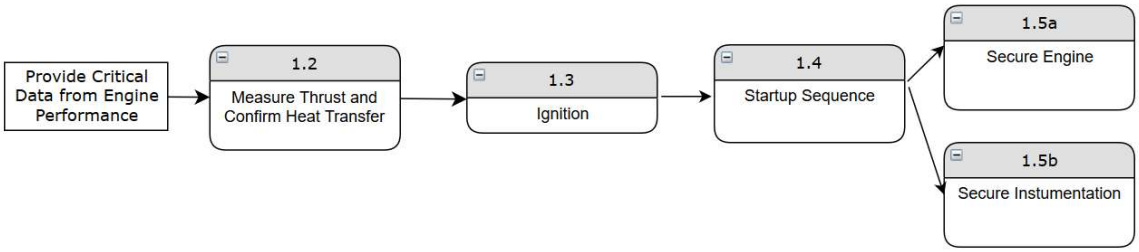

Figure 15. Test Stand Design Methodology Flowchart

6.4. Trade Studies and Test Stand Baseline Selection

Options		8020 Tubing		Rectangular Aluminum		Steel	
Categories	**Weights**	**Value (1 - 10)**	**Score**	**Value (1 - 10)**	**Score**	**Value (1 - 10)**	**Score**
Sturdiness	40%	8	3.2	8	3.2	10	4.0
Required Material (cost)	30%	6	1.8	9	2.7	7	2.1
Implementation	30%	10	3	5	1.5	5	1.5
Total Score	**100.00%**	(Total Score)/10 = 80%		(Total Score)/10 = 74%		(Total Score)/10 = 76%	

6.5. Test Stand Requirements Verification

Requirement ID#	Description	V&V Method	Notes
6.1.1.1.	Secure engine	Test	Secure and assess before test fire
6.1.1.2.	Secure sensors	Test	Secure and assess before test fire
6.1.2.1.	Fluid analysis	Calculation, Analysis and Test	Sensors within injector and cooling channels
6.1.2.2.	Thrust and Wall temperature analysis	Calculation, Analysis and Test	Sensors during test fire and manual measurements after operation
6.1.3.1.	Feed propellant	Test & Analysis	Assess during testing
6.1.3.2.	Safely direct hot gases	Test & Analysis	Assess during testing
6.1.3.3.	Emergency fire extinguishing system	Test & Analysis	Assess during testing
6.1.3.4.	Remote system control	Test & Analysis	Assess during testing

7. Conclusion

7.1. Summary

We have developed a preliminary design of a rocket engine that produces 10,000N of thrust and utilizes regenerative cooling to satisfy the main customer requirement of reusability. Due to it's small size, we've decided to 3D print our engine using inconel 718, which possesses the required thermal and structural properties to maintain structural integrity. Furthermore, a pintle injector was selected for its reusability, combustion stability and its ease of manufacture. Our initial O/F ratio and chamber pressure was selected so as to maintain a reasonable chamber temperature. From there, lateral cooling channels were selected instead of concentric channels due to its increased heat transfer efficiency as it allows more surface area of the thrust chamber to be cooled during operations.

At this stage in development we have obtained sufficient cooling of the thrust chamber to below the melting point of inconel 718 with a factor of safety of 1.4. Through heat transfer analysis of the engine we have obtained gas side wall temperature, coolant temperature, and heat flux as a function of the distance from the injector plate. Pressure and temperature of the coolant has also been determined at all locations through the thrust chamber. This ensures that the coolant does not boil before it enters the injector. Furthermore, we have designed a test stand that is capable of mounting the engine for static fire. A propulsion system has yet to be designed and will need to be addressed in the next phase of design. This brings us to the conclusions of our initial design objectives for preliminary design review.

7.2. Next Phase WBS

- 7.2.1. Thrust Chamber
  - 7.2.1.1. The next phase will include optimization of the thrust chamber dimensions. The current build volume exceeds most additive manufacturing machines by 40mm in height. This dramatically increase the cost of printing the engine. We will be exploring using a cone shaped nozzle instead of optimized bell nozzle.
  - 7.2.1.2. Further analysis of the cooling chambers.
- 7.2.2. Injector
  - 7.2.2.1. Design normally closed pintle injector
  - 7.2.2.2. Water flow test both injector designs to confirm capabilities
- 7.2.3. Intake Manifold
  - 7.2.3.1. Flow analysis through the manifold

7.2.3.2. Determine pressure coeff for analysis of pressure drops across the cooling system

7.2.4. Test Stand

7.2.4.1. Structural analysis of test stand design

7.2.4.2. Determine commercial off the shelf components to complete the test stand: Valves and plumbing

8. Appendices

8.1. Individual Contributions

8.1.1. Alexia Louis (Project Manager)

8.1.1.1. Designed engine and its components on Solidworks from calculated critical parameters

8.1.1.2. Contributed to calculations of design of fuel intake manifold

8.1.1.3. Produced, reviewed, and submitted appropriate documents and presentations based on current research and engine design

8.1.2. Brandon Sheehan (Chief System Engineer)

8.1.2.1. Wrote Matlab script to calculate initial values to be inputted into RPA

8.1.2.2. Wrote Matlab script for Pintle Injector Design

8.1.2.3. Designed and analysed Pintle Injector

8.1.3. Christopher Henderson (Propulsion Engineer)

8.1.3.1. Performed the parametric design and analysis of the thrust chamber to obtain preliminary engine dimensions and characteristics.

8.1.3.2. Used RPA to optimize the ideal design of the engine to obtain combustion chamber dimensions.

8.1.3.3. Designed and analysed 80% optimized parabolic nozzle.

8.1.3.4. Designed and analysed thrust chamber cooling channels

8.1.4. Eric Aguilar (Thermodynamics Engineer)

8.1.4.1. Obtained material characteristics to initiate engine calculations

8.1.4.2. Contributed with cross sectional area calculations to design manifold and ensure appropriate pressure and velocity at cooling channel entrance.

8.1.4.3. Designed test stand with engine injector dimensions and thrust characteristics

8.2. **Appendix A:** Parametric Rocket Design Equations

*From Table 5-5 (Rocket Propulsion Element)

I_s : 296s

K : 1.2

Thrust Coefficient:

$C_F = \frac{I_S g_0}{C^*} = \frac{296[s]*9.81[m/s]}{1835[m/s]} = 1.58$

$Where\ C_F = thrust\ coefficient$

Throat Coefficient:

$A_t = \frac{F}{C_F P_1} = 3000N\ /\ (1.58)(7293.6 * 10^3 P) = 3000N/(1.58)(7293.6 * 10^3\ [N/m^2]$

$= 2.59929 * 10^{-4}[m^2]\ \approx .358^{11}$

Throat Area Alternate Equation:

$A_t = \frac{mdot}{p_1}\sqrt{\frac{RT_1}{K[2/(K+1)]^{(K+1)/(K-1)}}} = \frac{1.000938}{7293.6 \cdot 10^3}\sqrt{\frac{(409.556)(3526[K])}{1.2[2/2.2]^{(2.2/2)}}}$

$A_t = 2.564 \cdot 10^{-4} m^2$

$where\ R\ is\ the\ gas\ constant\ of\ propellant$

$R = R'/M$ =8.314/.0203[kg*mol]= 409.556 [J/K]

Exit Velocity (Eq 3-16):

$C = V_L = \sqrt{(\frac{2K}{K-1})(\frac{R*T_1}{M})[1-(\frac{p_2}{P_1})^{(K-1)/K}]} = [[\frac{(2)(1.2)}{.2}][\frac{(8.3145[kg \cdot m^2/s^2 \cdot mol])(3526K)}{.0203kg/mol}][1-(\frac{101.3 \cdot 10^3[P]}{7293.6 \cdot 10^3[P]})^{(1.2-1/1.2)}]]^{1/2}$

C = 2972.12 m/s

Optimum Area Ratio:

$P_y = P_2 = P$ ———???

$\frac{A_t}{A_y} = \frac{V_t V_y}{V_y V_t} = (\frac{(K+1)}{2})^{(1/(k-1))}(\frac{P_y}{P_1})^{1/k}\sqrt{\frac{K+1}{K-1}[1-(\frac{P_y}{P_1})^{(k-1)/K}} = (\frac{1.2+1}{2})^{1/.2}(\frac{101.34[P]}{7293.64[P]})^{1/1.2}\sqrt{\frac{1.2+1}{.2}[1-(\frac{101.34[P]}{7293.64[P]})^{.2/1.2}]}$

= (1.61051)(.028328)(2.36789)

$\frac{A_t}{A_y} = .10803$

$A_2 = A_1 = A_{ext} = 2.59929 \cdot 10^{-4}[m^2]/.10805 = .002406\ [m^2] \approx 1.089^{-11}$???

Throat Temperature:

$T_t = 2T_1/(K+1) = 2(3526K)/(1.2+1)$

$T_t = 3205.45K$

Max Flow Rate:

$mdot = F/c = 3000[N]\ /\ 2972.12[m/s] = 3000[kg \cdot m/s^2]\ /\ 2972.12[m/s]$

$mdot = 1.00938kg/s$

8.3. **Appendix B:** Matlab script for parametric design

```
%Brandon C. Sheehan
% Pub Works
% For Senior Design 2019

*****************************************************************************************************************
*****************************************************************************************************************
Copyright © 2019 by PubWorks

All rights reserved. No part of this publication may be reproduced, distributed, or
transmitted in any form or by any means, including photocopying, recording, or other
electronic or mechanical methods, without the prior written permission of the publisher,
except in the case of brief quotations embodied in critical reviews and certain other
noncommercial uses permitted by copyright law. For permission requests, write to the
publisher, addressed "Attention: Permissions Coordinator," at the address below.

Pubworks
Long Beach, CA 90804
Christopher Henderson
323-636-3605
Brandon Sheehan
207-951-1436

*************************************************************************
*************************************************************************

OF = input('Enter the desired O/F ratio as a number to the tenth decimal: ');  %OF is fuel ratio
Pc1 = input('Enter the desired Chamber Pressure in psi from 240 to 1000 in intervals of 20: ');  % Pc1
is chamber pressure in psi
F = input('Enter the desired Thrust in Newtons: ');  % F is thrust

Pc = (Pc1*6.89476);  % converts psi to kPa
%chamber temp
%gives values for chamber temp at different O/F ratios and chamber
%pressures
% Chamber Pressure in table ranges from 240 to 1000 psi by 20
*****************************************************************************************************************
                % Refer to copyright to request access to temperature functions%
                %Must call temperatures as a function of O/F ratio found by NASA CEA%
                                %Code will not work without%
*****************************************************************************************************************
[A] =
[Tc20;Tc21;Tc22;Tc23;Tc24;Tc25;Tc26;Tc27;Tc28;Tc29;Tc30;Tc31;Tc32;Tc33;Tc34;Tc35;Tc36;Tc37;Tc
38;Tc39;Tc40];
```

```
OFt = ((OF*10)-20)+1;
Pc1 = (Pc1/20)-11;
T1 = A(OFt,Pc1);  % T1 is the chamber temp found from table above [K]

k = 1.2; % k is the specific heat ratio for liquid oxygen and liquid methane
R1 = 8.314; % gas constant R'
Tt = 2*T1/(k+1);  % Tt is the throat temp [K]
M = .0203; % M is the mean molar mass
R = R1/M;   % calculates R
Pt_Pc = (2/(k+1))^(k/(k-1));  %using equation 3-20 from RPE calcultes throat to chamber pressure
Pt = Pt_Pc*Pc;  %calculates throat pressure [kPa]
Patm = 101.325; %standard atmospheric pressure at sea level [kPa]
Ve = sqrt(((2*k)/(k-1))*R*T1*(1-(Patm/Pc)^((k-1)/k))); %calculates exit velocity [m/s]
mf = F/Ve; %calculates mass flow [kg/s]
g0 = 9.807; %gravitational force earth [m/s^2]
At_Ay = (((k+1)/2)^(1/(k-1)))*((Patm/Pc)^(1/k))*(sqrt(((k+1)/(k-1))*(1-((Patm/Pc)^((k-1)/k)))));
At = (mf/(Pc*1000))*sqrt((R*T1)/(k*((2/(k+1))^((k+1)/(k-1))))); %[m^2]
Ae = At/At_Ay; %exit area [m^2]
Is = F/(mf*g0); %specific impulse [s]
c_star = (Pc*1000*At)/mf; %c* [m/s]
Cf = (Is*g0)/c_star; %Thrust coefficient
%L_star = 1.016 %[m] note older iteration changed 11/20 selected based of charts showing Hydralox
and keralox based off energy density
L_star = 1.0 %[m] selected based off charts as above but also considering RPA and injector research
Vc = L_star*At;
Lc = .19678 %[m] from RPA as of 11/20
%Lc = 0.1524; %[m] note older iteration changed on 11/20
Ac = Vc/Lc; % [m^2]
Dc = sqrt(Ac/pi)*2; %[m]
Dt = sqrt(At/pi)*2;%[m]
De = sqrt(Ae/pi)*2 %[m]

%Injector Design
%Need to calculate the area of the holes in a pintle injector for the
%oxidizer and fuel
ro_o = 1141.0 % [kg/m^3] density of liquid oxygen
ro_f = 422.4 % [kg/m^3] density of liquid methane
mf_o = mf/(1+(1/OF)); %[kg/s] mass flow rate of the oxidizer
%mf_o1 = (OF*mf)/(OF +1);
mf_f = mf/(1+ OF); %[kg/s] mass flow rate of the fuel
flow_o = mf_o/ro_o;% [m^3/s] volume flow rate of oxidizer
flow_f = mf_f/ro_f;% [m^3/s] volume flow rate of fuel
%in order to calculate Area, assume Cd of .7 as found through research
%papers from experimental values
%assume that change in pressure must be 7%-15% of Chamber pressure to ensure
%safe operation
Cd = .7; %coefficient of discharge, ratio of actual discharge over theoretical
```

```
delta_P = .23*Pc; %[kPa] pressure drop from RPA channel exit numbers
delta_Po = .08*Pc; % low level in safety guidelines selected for TMR close to 1
feed_P = delta_P + Pc; %feed pressure in kpa
feed_Ppsi = feed_P/6.89476;% feed pressure in psi
delta_Pc = .07*Pc; %minimum safe delta p

%Injection Area
A_f = (mf_f/(sqrt(2*ro_f*delta_P*1000)))/Cd;% [m^2] Area of injector fuel
A_o = (mf_o/(sqrt(2*ro_o*delta_Po*1000)))/Cd; % [m^2] Area of injector oxidizer

%velocity of fuel
v_f = sqrt(2*delta_P*1000/ro_f); % [m/s]
%velocity of oxidizer
v_o = sqrt(2*delta_Po*1000/ro_o); % [m/s]
%v_o = 20.435; %[m/s]
%total momentum rate ratio (TMR)
TMR = (v_o*mf_o)/(mf_f*v_f);

%Diameter of chamber Dc1 comes from RPA as of 11/20/19
Dc1 = .12865; %[m] from RPA
%Diameter of pintle
Dp_c = 1/4*Dc1; %pintle diameter is usually 1/3-1/5 the diameter of chamber
Dp = .03175; %[m] selected based off Dp_c and picking closest available

%Diameter of outer circle (fuel orifice from center)
A_p = pi*.25*(Dp^2); %Area of pintle
A_out = A_f + A_p; %Area of outer circle
r_out = sqrt(A_out/pi); %radius of outer circle
D_out = 2*r_out; %diameter of outer circle

%Diameter of inner circle (oxidizer)
r_o = sqrt(A_o/pi); %radius of oxidizer slot
D_o = 2*r_o; %Diameter of oxidizer slot

%Skip Ratio of 1 is ideal for combustion efficiency
% from the skip ratio of 1 a pintle length can be calculated
SR = 1;
L_p = SR*Dp;

%slots for oxidizer
%number of slots*width*height should equal Area of oxidizer
%Aspect ratios of 5-10 typical or 2-3 in another more recent source
%number of slots 16 - 36 typical
%Blockage Factor (BF) is typically between .3 and .7 with lower value being
%BF = (N*squiggly_d)/(pi*Dp)

c_p = pi*Dp; %[m] circumference of pintle
```

```
N_p = 16; %initial selection 11/20, number of holes
BF = .5 % inital selection 11/20
%squiggly_d = (BF*c_p)/N_p; %[m] diameter of pintle holes
squiggly_d = .0015875 %set to 1/16 inch in commie
height_p = A_o/(squiggly_d*N_p); %[m] slot height
gap_d = (c_p - squiggly_d*N_p)/N_p % [m] gap between holes
AR_p = height_p/squiggly_d; %[m]
A_oc = squiggly_d*height_p*N_p; %[m^2]area of holes just calculated

%Bolt stress for connecting tip to injector plate
% using pressure inside pintle which is 108% of chamber pressure
% find force exerted on pintle tip from area of tip
%using ultimate tensile strength at 77K  of 1640 MPa find minimum area of
%rod

Ft_p = (1.08*Pc*1000)*A_p; %[N] force on inner tip
sigma_Y = 1640 * 10^6; % [Pa]Ultimate Tensile Stress at 77K In718
A_r1 = Ft_p/sigma_Y; % [m^2] Area of rod
r_r1 = sqrt(A_r1/pi); % [m] minimum radius of rod

%including Factor of safety of 2, FS = sigma_Y / sigma,
FS = 2; %Factor of safety
A_r = (Ft_p * FS)/sigma_Y; %[m^2] Area of rod FS of 2
r_r = sqrt(A_r/pi); %[m] minimum radius of rod FS 2
D_r = 2 * r_r; %[m] minimum diameter of rod FS 2

%due to threading a rod size of 3mm is selected
D_rs = .003; %[m]
A_rs = pi*(.5*D_rs)^2; %[m^2] area of rod
%Pintle oxidizer slot accounting for area occupied by tip rod
A_op = A_rs + A_o; %[m^2] area of oxidizer slot accounting for rod
r_op = sqrt(A_op/pi); %[m]radius of circular slot LOx
D_op = 2 * r_op; %[m] diameter of circular slot LOx

%Shows selected calculated values
T1
Tt
At
Ae
Is
c_star
Cf
Vc
Ae/At
```

```
clear; clc;
%INLET MANIFOLD CALCULATIONS
%CWidth= 0.004886; %[meters] coolant channel Width
%CLength = 0.001796; % [meters] coolant channel length
TotalArea = 472.43e-6; %[mm^2---> m^2] total cross sectional area of cooling channels
Channels = 62; % number of cooling channels
CArea = TotalArea/Channels; % [m^2] coolant channel area
%Notes:
%- density can change due to varying pressure and temperature
%- pressure will vary depending on manifold area
P1 = 4.551*(10^6); % [Mpa---> Pa] pressure at tubes , OPEN TO CHANGE, (or 660.06674 psi)
P2 = 4.551*(10^6); % [MPa---> Pa]desired pressure at nozzle entrance
Rho_M1 = 425.81; % [kg/m^3] at tubes/manifold, methane density @ 4.551 MPa WILL CHANGE IF
P1 CHANGES
Rho_M2 = 425.81 ; %[kg/m^3] at nozzle entrance, Methane density @ 4.551 MPa
V2 = 17.5; %[m/s] velocity at entrance of manifold
PTank = 4.82633; %[MPa] pressure in tank (up to change) or 700psi
M_dot = 0.98400; %[kg/s] mass flow rate throughout system

%from Bernoulii's equation
V1 = sqrt(( ((P2) + (0.5)*(Rho_M2)*( V2^2)) - (P1) ) / (0.5* Rho_M1));
%from continuity equation
 A1 = ( V2* TotalArea ) / V1; %area of tubes
%Goal: intersect manifold directly into cooling channels
Radius_Channel = 58.65; % radius from center of nozzle to bottom face of cooling channel
Radius_Nozzle_Inner = 57.83; %radius of nozzle exit
Radius_Nozzle_Outer = 61.945; %radius of total nozzle [mm]
Manifold_thickness = 0.8; % in [mm]
%---------------For Semi-Circular Manifold-------------------------
H = sqrt( (A1*(10^6))/pi); % Height of hose in mm
FlatFace = 2*sqrt( (A1*(10^6))/pi); % SemiCircle's Flat Face length
H_inches = H*0.0393701; % Height of hose in inches
fprintf('the diameter of a semi-circular hose will be: %d[mm] or %d[inches] and have a face length of
%d[mm]\n',H, H_inches, FlatFace);
%---------------For Circular Manifold-------------------------
D = 2*sqrt( (A1*(10^6))/pi); % Diameter of hose in mm
D_inches = D*0.0393701; % diameter of hose in inches
fprintf('the diameter of a circular hose will be: %d[mm] or %d[inches]\n',D, D_inches);
%---------------For Triangular manifold-----------------------
Tri_Side = sqrt ( (4/sqrt(3))*(A1*10^6)); % Triangle side in mm
Tri_Side_Inches = Tri_Side * 0.0393701; %triangle side in inches
fprintf('One side of a triangular hose will be: %d[mm] or %d[inches]',Tri_Side, Tri_Side_Inches);
```

8.4. **Appendix C:** Quotes for DLSM additive manufacturing

Christopher,

Below is the pricing for our near net DMLM print, with powder removal, part removal, and best i3D practices for part clean up and support removal for the M400.4

Part Number	File Name	Metal	Quantity	Unit Price	Lead Time
CSUL.801	Pubworks_Engine_Prilim	IN718	1	$14,500.00	Scheduling Req'd
NRE	Non Recurring Engineering	-	-	$600.00	-

Any questions please feel free to give me a call.

Thanks,

V/R,
Robbie Rosten

I3DMFG™
DISRUPTIVE METAL 3D PRINTING
AS9100:2016 D Certified

Deschutes Ridge
1001 SW Disk Drive, Suite 110
Bend, Oregon 97702
541.678.3468 direct
www.i3DMFG.com
Rrosten@i3DMFG.com

stratasys
DIRECT MANUFACTURING

Rapid Prototyping
Low-Volume Production Parts
Tooling and Molding
3D Viewing & Markup Software

Stratasys Direct Manufacturing R.O.M. Quote for Production Parts

AS9100 & ISO 9001 Certified (Valencia CA, Austin TX, Belton TX, Eden Prairie MN) | ISO 9001 Certified (Poway CA, Phoenix AZ, Tucson AZ)

PREPARED FOR

Christopher Henderson
Mr
935 Freeman Ave, Unit C, 16
Long Beach, California 90804
Phone: (323) 636-3605
Email: christopher.henderson@student.csulb.edu

QUOTATION INFORMATION

Quote Number: 2719380-2
Quoted On: 12/5/2019 12:36:47 PM
Reference: RFQ - 628464
Project Engineer: Kenneth Rather | (512) 821-1112 x343
kenneth.rather@stratasysdirect.com
Account Manager: Chris Ganczewski | (805) 276-7306
chris.ganczewski@stratasysdirect.com

Item	Description	Quantity	Unit	Total
	Pubworks_Engine_Prilim x | y | z extents: 6.69 | 6.73 | 13.61 inches volume | s. area: 24.64 | 829.71			
1	DMLM Discover: Material=Nickel Alloy 718, Finish=Premium, Surface Treatment=Hand Polished Inside Only	1	$18,799.00	$18,799.00
			QUOTE TOTAL	$18,799.00

Quote reflects rough order of magnitude ("ROM") pricing based on information available at the time of quote which is either incomplete or not finalized. A requote will be necessary to confirm or update pricing and will need to be issued prior to acceptance of order. SDM reserves the right to adjust price accordingly upon receipt and review of final design, drawings, terms & conditions, and quantity, and adjust for any additional process or quality requirements.

Delivery: Estimated shipment in 12 working days A.R.O. Actual schedule to be determined after receipt of order.

Terms:

Notes: **Stratasys Direct Manufacturing standard terms and conditions apply.**

9. References

Candelaria, J., Choudhuri, Ahsan, Chessa, Jack, & Contreras, Luis. (2017). Theoretical Acoustic Absorber Design Approach for LOX/LCH4 Pintle Injector Rocket Engines, ProQuest Dissertations and Theses.

eCFR - Code of Federal Regulations. (n.d.). Retrieved October 31, 2019, https://www.ecfr.gov/cgi-bin/text-idx?gp=&SID=1f58495405665a030c05e44bca5a8591&mc=true&tpl=/ecfrbrowse/Title14/14chapterIII.tpl.

Pizzarelli, Nasuti, Onofri, Roncioni, Votta, & Battista. (2015). Heat transfer modeling for supercritical methane flowing in rocket engine cooling channels. Applied Thermal Engineering, 75, 600-607.

Park, T. (2013). Effects of Aspect Ratio on the Turbulent Heat Transfer of Regenerative Cooling Passage in a Liquid Rocket Engine. Numerical Heat Transfer, Part A: Applications, 64(9), 710-728.

Sun, H. (2006). Review of liquid oxygen/methane rocket engine. Huojian Tuijin / Journal of Rocket Propulsion, 32(2), 23-31.

Sutton, G., & Biblarz, Oscar. (2017). Rocket Propulsion Elements, Ninth Edition (Ninth ed.).

Trillo, J., Chodhuri, Ahsan, Contreras, Luis, & Love, Norman. (2016). Design of a 500 Lbf Liquid Oxygen and Liquid Methane Rocket Engine for Suborbital Flight, ProQuest Dissertations and Theses.

Ulas, & Boysan. (2011). Numerical analysis of regenerative cooling in liquid propellant rocket engines. Aerospace Science and Technology, 24(1), 187-197.

Yang, W., & Sun, B. (2013). Numerical simulation of liquid film and regenerative cooling in a liquid rocket. Applied Thermal Engineering, 54(2), 460-469.