Developing Thalia:

Undergarment Reacting to Vocal Bursts of Actors in Theater Play

Chris Bernsen
1333453
Eindhoven University of Technology

Elsa van Dam
1340123
Eindhoven University of Technology

Kim Wintraecken
1322842
Eindhoven University of Technology

ABSTRACT
In this pictorial, the process and results of a project, which focuses on adding an extra dimension to the vocal expression of actors, is discussed. During big plays, the viewers in the back do not have the possibility to experience all aspects of theater, in particular facial expressions, to the fullest. By adding another dimension for emotional expression this problem is solved. For the viewers in the front, this extra dimension enriches the experience. An undergarment with LED patterns corresponding to vocal bursts adds this dimension. Examples of outer layers to diffuse the light from the LED strips as well as a way to use movement as a channel for vocal expression are presented. The techniques used are the recognition of vocal bursts, mechanical embroidery, creation of movement and the programming of LED strips to create patterns. All aspects work, although they are not all connected. The project combines the previously mentioned aspects and could work as an inspiration for this field of design.

Paste the appropriate copyright/license statement here. ACM now supports three different publication options:

- ACM copyright: ACM holds the copyright on the work. This is the historical approach.
- License: The author(s) retain copyright, but ACM receives an exclusive publication license.
- Open Access: The author(s) wish to pay for the work to be open access. The additional fee must be paid to ACM.

This text field is large enough to hold the appropriate release statement assuming it is single-spaced in Times New Roman 7-point font. Please do not change or modify the size of this text box.
Each submission will be assigned a DOI string to be included here.

Authors Keywords
vocal bursts; vocal recognition; theater; emotion; clothing; LEDs

CSS Concepts
• Human-centered computing~Human Computer Interaction (HCI)

INTRODUCTION
In theater, decor, lights, voice acting, singing, dance and many more each contribute to the overall experience of the visitors. A significant part of theater consists of conveying the actors' emotions to the audience. In large theater productions, voice acting and body gestures are often exaggerated to make up for the fact that people at the back of the audience are located too far to see the facial expressions of the actors or notice subtle body movements.

The goal of this project is to add an extra dimension of emotional expression of the actors by developing an article of clothing that reacts to the voice of the actors' voice. To achieve this, an undergarment was created and equipped with multiple LED strips that react to vocal bursts of the wearer. The high visibility of these lights acts as a wow-factor for the visitors' experience while also serving the purpose of being visible to people sitting at the back of the audience.

This report explains the process of the development of this concept and product. This process started with doing broad explorations by making simple prototypes and referring to previous research for ideating and developing a concept. After conceptualization, more prototypes were developed to come to a final product.

RELATED WORK
There is a huge variety of LED dresses which are already being made for creative purposes, for example, DJ shows, concerts, photography and dance[13]. Research about the connection between emotion and vocal bursts has been done[8]. Vocals bursts have also been mapped[16] and described according to emotion[2]. There are multiple garments that change according to sensory feedback. The Design group at Royal Philips Electronics designed a dress Bubelle, which senses emotion and reacts to it[12]. Ying Gao designed interactive clothing with fingerprint recognition technology[1]. Jessica Smarsch has digitally captured muscle movements and used them for woven patterns for her fashion range[7].

DISCUSSION
During the design process, more time could have been spent on making low fidelity prototypes to develop a concept that was based more on prototyping instead of ideation, since this was the starting point of design within the squad that this project was a part of.

For future developments of this product, more time should be spent on validating the design of our product by making use of user input. It was done now to validate the design of the different light patterns and colours that correspond with each vocal burst, but user input can also be used to test for example the wearability of the product and the need for other features. The functionalities of the final prototype were also not presented to a theater

producer, the target group of the product, to receive input and change the product to their needs. This would be an important step in developing the product further. The end prototype is made to fit a female body. No explorations were made in making a prototype that would fit a male body, while it is not intended to exclude male actors from using this product in a theater production.

For this product to work, more research should be done in altering the current software used or using a different kind of software to see if they can be more effective in accurately predicting vocal bursts from the human voice, as the current software was too unreliable in doing so. Another point is to be made about the connections that were made between certain vocal bursts and emotions. While the vocal burst screaming is often tied to anger, it could also originate from joy or fear. Research should be done in seeing if a voice recognition software can distinguish these from each other, to convey the emotions of the actors more effectively.

CONCLUSION

The result of the project is a set of undergarments, two fitting outer layers and a third exploratory dress.

The undergarments are identical except for the fact that one dress has two long LED strips in the middle and the other dress has two short strips in the middle. The patterns on the strips respond to six vocal bursts. The yellow pattern is for laughing, the red one for screaming, the orange one for “huh?”, the blue one for crying, the purple for gasping and the white one for sighing. The underdresses are the base of our design and would be the product we sell to the producers of theater.

The outer dresses are examples of how the lights could be integrated into clothing. Together they form a modular system. The dress with the fan is just for exploratory usage.

The lights on the underdresses create an extra dimension for vocal expression. For people in the front of a theater, this creates a more rich experience. For the people in the back this solves the problem that it is difficult to see facial expressions.

Thinking about how the product would be integrated into a conventional theater production, the product could make use of the fact that in a lot of theater productions, the actors are already equipped with microphones that send their audio wirelessly to an amplifier to be put out by speakers. This same audio could be received by a computer that uses the software to make predictions about the emotion expressed in the actor’s voice and could then be sent to the processing unit in the actor’s undergarment. Some convenient aspects of this are that each microphone is already made and positioned to only record the voice of the actors without any background noise and that doing it this way does not require the actors to carry a processing unit on their body that is sophisticated enough to run the software on its own.

Looking back at the values which were determined at the beginning of the project the design changed so much that it does not fulfill all these values anymore. The aesthetics can be changed per use because of the modularity so this need is fulfilled. The garment is also innovative, but it isn’t produced sustainably. The garments needs a lot a batteries to work properly. The garment doesn’t have a social aspect, but does solve a practical need. Finally, it isn’t accessible, but because the context doesn’t focus on the wearer anymore, but the people who experience the design in theater, this is not a problem.

The LEDs are programmed correctly and the voice program could recognize two different vocal bursts. However, the two are not connected. The concept changed a lot during the project, but the result does have many aspects of previous ideas. Everything came together at the end.

Regarding the results of the final survey, the light patterns chosen for the vocal bursts sighing, gasping, crying, screaming, and “huh?” are close to the associations with the vocal busts chosen by the repliers. The light patterns of the vocal bursts sighing, crying, and “huh?” could be adjusted a little bit, as they were also strongly associated with one other vocal burst. The light pattern chosen for the vocal burst laughing had no close associations with the vocal bursts chosen by the repliers. This light pattern could thus be changed entirely.

ACKNOWLEDGMENTS

We are thankful for our project coaches Annika Hupfeld and Rong-Hao Liang who guided us through this project as tutors. Furthermore, we would like to thank Ilona Janssen, Famke Rouschop, Naoki Hermans, Sanne van den Biggelaar, Erik Kierkels, Veer…, and Kiara de Meijer from the Summa Fashion College in Eindhoven who produced and delivered the articles of clothing for us.

We are especially grateful to Rong-Hao Liang for providing the basis for the voice recognition software program and for his assistance.

REFERENCES

[1] Acance, F. (2017). Interactive Clothing with Fingerprint Recognition Technology by Ying Gao. Yellowtrace. Retrieved from https://www.yellowtrace.com.au/possible-tomorrows-fashion-technology-ying-gao/

[2] Cowen, A. Laukka, P. Elfenbein, H. Keltner, D. (2018). Mapping 24 Emotions Conveyed by Brief Human Vocalization. American Psychological Association. Retrieved from https://bsil.berkeley.edu/wp-content/uploads/2019/01/CowenEtAlAmPsych.pdf

[3] Laver, J. (1969). The Concise History of Costume and Fashion, New York NY USA, Harry N. Abrams, Inc. Publishers

[4] Nummenmaa, L. Glerean, E. Hari, R. Hietanen, J. (2013). Bodily Maps of Emotions. Psychological and Cognitive Sciences. Retrieved from https://www.pnas.org/content/pnas/early/2013/12/26/1321664111.full.pdf

[5] Park, S & Jayaraman, S. (2003). Enhancing the Quality of Life Through Wearable Technology. Engineering in Medicine and Biology Magazine, IEEE. 22. 41 - 48. 10.1109/MEMB.2003.1213625.

[6] Reeves, B., & Nass, C. I. (1996). The media equation: How people treat computers, television, and new media like real people and places. Center for the Study of Language and Information; Cambridge University Press.

[7] Sebambo, K. (2015). A garment making process that translates bodily movements into clothes. Design Indaba. Retrieved from https://www.designindaba.com/articles/creative-work/garment-making-process-translates-bodily-movements-clothes

[8] Simon-Thomas, E. R., Keltner, D. J., Sauter, D., Sinicropi-Yao, L., & Abramson, A. (2009). The voice conveys specific emotions: evidence from vocal burst displays. Emotion, 9(6), 838-846. Retreived from https://doi.org/10.1037/a0017810

[9] Takahashi, F., & Kawabata, Y. (2018). The association between colors and emotions for emotional words and facial expressions. Color Research & Application, 43(2), 247-257.

[10] Tierney T. (2000). Renaissance Fashions, Mineola NY USA, Dover Publications

[11] Wahl, O. (2011). Stigma as a barrier to recovery from mental illness, University of Hartford. Retreived from https://doi.org/10.1016/j.tics.2011.11.002

[12] Weir, J. (2007) Bubelle Emotion Sensing Dress. Crunchwear. Retrieved from https://crunchwear.com/bubelle-emotion-sensing-dress/

[13] Etereshop (2019) Top-17 LED Light Dresses of 2019. Retrieved from https://www.etereshop.com/top-17-led-light-dresses-of-2019/

[14] Health Direct (2018), Types of mental illness, Australia. Retreived from https://www.healthdirect.gov.au/types-of-mental-illness

[15] Hoodie Buddie. Retreived from https://hoodiebuddie.com/

[16] The Emotions Recognized in Vocal Bursts. Retrieved from https://s3-us-west-1.amazonaws.com/vocs/map.html#

To get a better understanding of the interests of the team members within the field of crafting everyday soft things, each member made a mood board of everything that was seen as inspiring. A mindmap was made with all the interests of the team members and how they relate to each other. It became clear that all the team members wanted to make clothes with integrated technology with respect to traditional and new techniques with either passive interaction, interaction between the user and the piece of clothing, or active interaction, using the garment as a way of interaction between different people.

Already at this point, one team member pointed out a problem that has been a recurring concept throughout our project. It was stated that the functionality of an interactive article of clothing does not remove the desire to change outfits over the course of multiple days. Taking a jacket with built-in headphones[15] as an example, the user might face the dilemma of wanting to use the headphones without wanting to wear that jacket. This dilemma is partly solved by making either wearable technology with a more circumstantial functionality or by making it in such a way that it could be worn without interfering with the wearer's outfit.

Referring to the Smart Shirt[5], an "intelligent" undershirt that is among other things, lightweight to wear and intended to be worn under work uniforms, the idea arose to equip wearable technology in undergarments instead of outer clothes. This would resolve this problem where users might want to make use of its functionalities but do not want its appearance to be part of their outfit. Fashion as a form of expression can after all not be ignored when designing interactive fashion items.

Since touch and vision are part of the experience of current clothing, an idea which was further elaborated, was the idea of adding more senses, like hearing, smell or taste to the experience of wearing a garment. A mind map made by the team as well as people outside of the group was about how clothing is experienced at the moment and what clothing means to people. Interesting results were the fact that emotions are strongly connected to clothing and can be an important part of personal expression.

Because a broad variety of research and projects has been done within this field of design, exploratory research was done to get an idea of the possibilities. Based on the mindmap, research was done about techniques to make fabrics with patterns and texture, sustainable design techniques, different techniques to produce clothing, laser cutting and pleating. The knowledge gained from these papers was used to make the exploratory prototypes

Elaborating on the concept of creating an interactive undergarment, an undershirt was made out of a very thin and lightweight material, tulle, as an exploration to create an article of an undergarment that would hardly be noticeable to the wearer.

A long-sleeve model was first made, but a second, sleeveless prototype was made soon after since it would allow the user to freely wear sleeveless shirts while also wearing the prototype. The prototype was made to be very form fitting, to prevent to interfere with the shape of any clothes worn over it.

By wearing it for several hours, the prototype was already noted to be fairly unnoticeable when worn.

Thinking of a way for the garment to still be visible for others, while keeping its original qualities, explorations were done with using the effect of slashing in clothing, popular in 16th century German fashion[10]. People wanted to show these undergarments and therefore made slits in their outer garments where they pulled the fabric through[3]. For the first prototype an old woven sleeve was used as the outer layer and a lightweight, shiny, thin fabric represented the undergarment. Different kinds of slits were made and the fabric was pulled through in different ways. A large hole caused the fabric to fall out of the slit. The same thing happened with a long, small, vertical slit. A circle shaped hole made it possible to pull out a lot of fabric. This created the possibility to fold the fabric into the shape of a rose, which was a liked effect. An elegant effect was created with a long, small horizontal slit. Another prototype used the sleeve of a knit sweater and a stiff, woven fabric. The chunky knit made it possible to pull out the fabric, without cutting the outer layer. The fabric was folded into itself to create an interesting effect. Because both prototypes made use of effects at the side of a piece of clothing, the sweater was cut in half to create other interesting effects at the side. For one prototype, a waterfall effect was created on the side and for the other prototype a simple ribbon detail was made. Because of the natural interest of one of the team members in the use of different materials together, a top was made which used three completely different fabrics with different patterns and textures to create an interesting top.

Finally, samples were made to experiment with traditional techniques. Tucks in knitted fabric were made to create a fan-like sample. It was discovered that stretchable fabric must be used to make tucks. Another sample used the technique of reverse applique where a pattern is cut out from the outer layer to show the pattern underneath. This is a useful technique to tone down a busy pattern and relates to the slashing technique.

As previously mentioned, the use of senses might be an interesting approach. Changing the garment increases the sensory experience. A piece of clothing can be changed by changing the shape, fit, fabric, thickness, size, colour, print or by movement. These changes were drawn to make them more tangible.

The exploratory prototypes gave interesting insights about the use of shapes and materials, but an actual use for our design was not defined yet. Therefore, a lot of ideation was executed.

To make the process of choosing an idea easier, the values were determined:

- the aesthetics of the garment should compliment its use
- the garment should be innovative
- the garment should be produced sustainably
- the garment should be accessible
- the garment should have a social aspect

With these values in mind, several ideas were proposed.

The first idea was based on the fact that emotions are felt on different places on the body[4]. People with mental health issues might have difficulty grasping or controlling their emotions. An article of clothing could give comfort on certain places of the body corresponding to the emotion felt. This will enrich the connection with your own body. Two team members drew where they feel emotions and compared this with the research that has been done about this subject to see if this matched. Surprisingly, there were little similarities, which would make it difficult to execute this idea. Research was done about different mental health issues[14], and two types were chosen to focus on, because the other types were too far away from our own experiences. The types the team showed interest in were mood disorders, namely depression and bipolar disorder, and anxiety disorders, especially social anxiety.

The second idea was to stimulate physical social interaction as a reaction to psychological study that concluded that people are treating digital media as real people and places[7]. The question arose how to make social interactions more tangible, replacing digital social interactions enabled by social media. An interesting focus might be to look at the interaction between different generations. The solution might be to be able to relive social interactions and the feelings you had during this interaction, by means of using photos or emotions. By using emotions the link was made with the previous idea.

Because the idea of using emotions and mental health kept arising, a third idea came up about this subject that concerned developing a product that tries to decrease the stigma that still exists on mental health, since decreasing this stigma is an important part of recovery from mental illnesses[11]. By for example making a product whose function and appearance makes these subjects more easily talked about, it could break this current stigma.

The functional use of aesthetics has been another recurring concept throughout the project.

Finally, by looking at embodied interaction, the idea was raised to use embodied interaction for entertainment, but this idea wasn't explored further yet at this point.

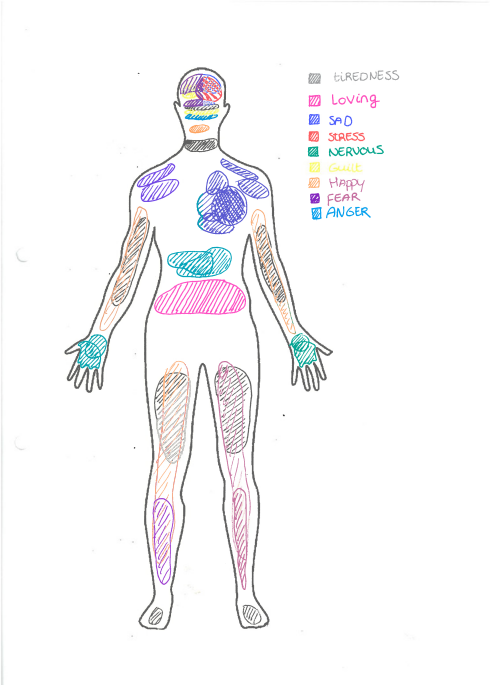

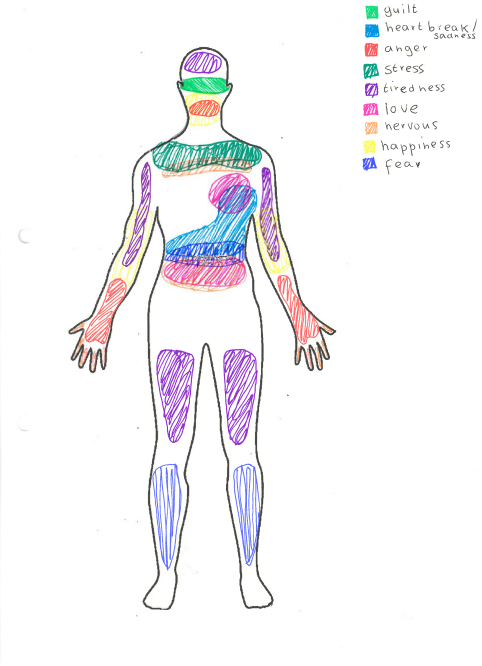

While the design process was still in a very exploratory phase leading up to the midterm demo day, it was important to have an elaborated concept to present and to receive valuable opinions and comments on.

The concept that was presented was an article of clothing that changed according to the emotions of the wearer, based on obvious physiological changes some animals undergo to express emotions or during courtship, in contrast to humans that lack this unique form of emotional expression. Some given examples of this included the hairs of a cat standing upright when scared or angered and a peacock fanning out its feathers during courtship. One use of the garment could be to let the wearer become more in touch with their emotional expression. How the garment would measure the emotional state of the wearer, how the garment would react and the societal context of the product were still left undecided. Measurements we thought of were heartbeat, voice and galvanic skin response.

The prototype for the midterm demo day consisted of a cotton T-shirt with several pieces of fabric put on it that showcased different ways in which the article of clothing could change.

Notable comments that were given during the midterm demo day were for one that using the voice of the wearer to measure its emotional state could be interesting to do further explorations in, since it was said to be something not often done before.

Another given comment was to not only focus on the effect the garment could have on the wearer itself, but also on the people surrounding the wearer and how they would perceive these changes in clothing. Furthermore, it was recommended to see the piece of clothing as an extension of the face and to look at the interaction between the user and the receiver, as communication and interaction were important values chosen at the beginning of the project.

An important comment that was given was that a precise context should be found for the project.

Based on the feedback from the midterm demo day the design was changed and conceptualised. The team decided to continue with the concept of a garment that changes due to the emotion in voice. The design goal would be to let the user be more in touch with his vocal, emotional expression, which creates a new experience for the wearer and receiver. The piece of clothing should have a big surface area, because it gives more possibilities to show changes. This narrowed the piece of clothing down to a long coat, dress or jumpsuit. It should also have a high collar, because a microphone attached to the garment to record the wearer's voice should be close to the mouth. An idea was to let the collar be the on-off switch, where the piece of clothing is off when the collar is down and on when the collar is up. The way the garment would change was still left undecided.

Options that were considered included inflatable parts, lights, changing patterns or moving fabrics.

As part of this project, students of the Summa Fashion College Eindhoven were asked to work together with students of the University of Technology Eindhoven by producing articles of clothing for their projects. This project concept among others was presented to them. Doing so, it became apparent that they needed a more concrete concept and requirements to start working on garments. They also had the requirement from their project to produce at least three articles of clothing. From there, it was determined that they would create three dresses for this project, each with slightly different properties. This enabled for more exploration within the concept before coming to a final prototype. It was decided that with these three dresses, explorations would be made with using light and moving fabrics to express emotions. LEDs that can change colour, light intensity and patterns offer a huge variety of change making it effective in expressing something as complex as emotion. Sketches of the dresses with detailed notes were made to concisely communicate the ideas to the Summa Fashion students. One dress would consist of an undergarment with six LED strips and a second long layer to diffuse the light as an exploration on how fabric could diffuse this light. The second dress, which would become the 'main dress' would also consist of an undergarment with six LED strips, a second layer to diffuse the LEDs' light and would also contain a third layer on which a pattern would be cut out that contained holes on the places of the LEDs. The third dress would be equipped with two digital motors that would move a fan placed on the chest inwards and outwards.

Trying to find a context for the concept, the idea of using the product for entertainment purposes was revisited. Namely theater plays, where the transfer of emotions is essential and where emotional expressions in voice already tend to be exaggerated. To validate whether the idea would be interesting for theater, an interview was held with a student who is part of a student theater association, who has a lot of experience with acting and the whole process of creating a play. The goal of the interview was to get an understanding of how costumes are being used in in plays at the moment, how actors use their voice for the transfer of emotion and whether this design would be interesting for plays. From this interview, the most interesting insights for this project were that costumes change for every play, are chosen by the director and should fit the style of acting. They support the story or create contrast. At the moment they are barely used to transfer emotion, which is mostly left to the acting itself, which mostly uses a combination of voice, gestures and body posture. The whole body works together to create a convincing story. According to the interviewee, directors are constantly looking to add new dimensions to their plays. Therefore, this design could be interesting for theater. However, because it is very innovative and outspoken it would probably become a key aspect of the play. Therefore, as a company it would be necessary to show the garments to directors, before they write a play. They could not be added to any play. It should also be taken into account that the play should be played on a relatively dark stage to be able to see the lights. Another context the interviewee pointed out is the use of the garments to teach actors to talk loud and clear enough. Furthermore, they could be used for GLOW or other events to create an experience.

Due to the interview it could be concluded that the context of our design was chosen well. Our product could be used in theater as long as the play would be tuned to the design.

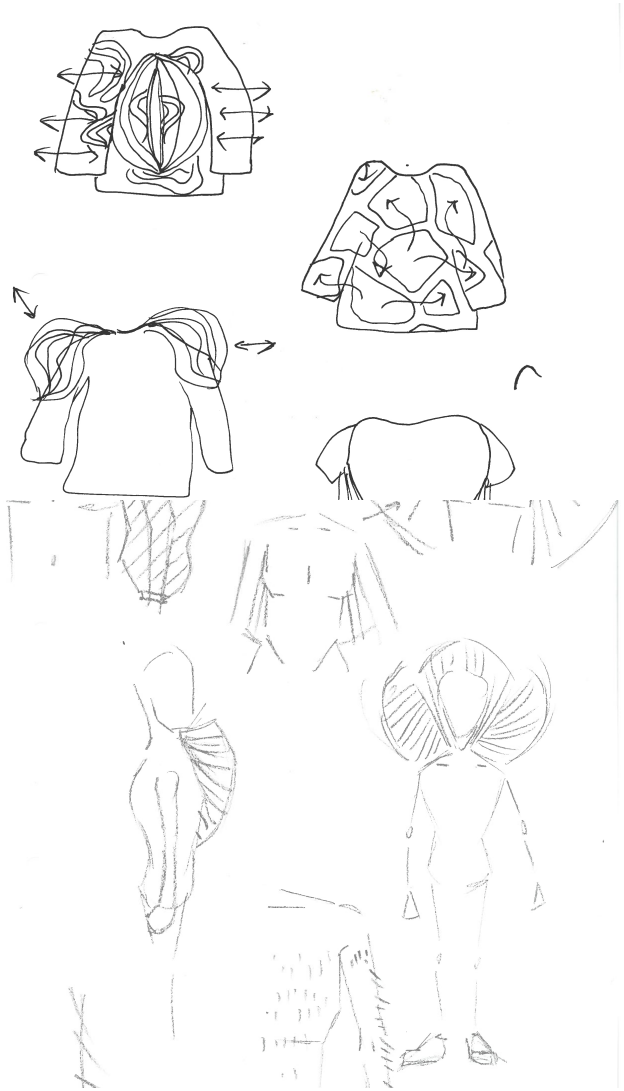

Once the concept was validated, the prototype would have to be realised.

Fabrics were chosen together with the students from the Summa Fashion College. The undergarments would have to be made with a stiff, firm fabric to be able to hold the electronics. Off-white was chosen as a colour because of its neutral qualities. The second layer for the diffusing of light was chosen to be black, because of the contrast it would create with the white and because the light would be more visible shining through a dark coloured fabric instead of light coloured. An important factor of choosing the fabric was how it would diffuse the LED light through it. The upper layer for the main dress was white again, because of the contrast and consistency and the type of fabric was based on the fact that holes would be made with a laser cutter to create the desired effect.

Instead of using a laser cutter, the pattern on the upper layer was made with an embroidery machine, using the cutting needle since this would also stitch the edges. First a long slit was made, but because of the placement of the slits on the body this would cause the slits to jump open. Therefore it was decided squared holes would be made in the shape of the squared lights on the LED strips. This pattern would hold its shape. Several samples were made to figure out the right distance between the squares. This was very difficult, because the fabric needs to stretched to be used for the embroidery machine and once it isn't stretched anymore it is hard to predict the distance. The eventual distance is the distance that was the closest to the actual distance, but it wasn't perfect. Another problem was the placement of the lines on the fabric. The embroidery could not be done in one go. It was therefore needed to place the fabric multiple times in the embroidery machine and trust on the eye to get everything symmetrical. This was achieved partly.

One dress was made to have a fan hanging from the collar that could fan inwards and outwards. This dressed served as an exploration on how to execute form change in a clothing item with electronics. The fan is made out of a cotton fabric with a wooden slat on each of its ends which are attached to a continuous servo motor. The motor is attached to the collar of the dress where it lies concealed and is attached to a Lilypad Arduino and battery packs on the back of the dress. Two buttons were attached to the Lilypad and it was programmed to move the fans in- or outwards based on which button was pressed to present it on the final demo day. Using this change in form as an emotional expression was deemed too simplistic to convey enough information about the emotional state of the wearer to be interpreted effectively by the observer.

During the execution of the final concept, and thus getting the garment to effectively react to the emotional state of the wearer, finding a way to do this was still unknown. Experimenting with attaching a small microphone to an Arduino showed that the complexity of sound coming from the voice combined with the limitations of such a microphone made it almost impossible within the time span to detect emotions with this technology. During a project meeting, an assistant professor working within our squad, Rong-Hao Liang presented a machine-learning software he had previously developed that could distinguish the voices of different people by training a model with audio recordings of each voice.

By instead training the software with audio recordings of people speaking while expressing different emotions, the attempt was made to let the software distinguish emotions instead of people from speech. To aid the software in effectively predicting certain emotions, the software was trained with audio recordings of so called vocal bursts, short non-verbal exclamations that can convey certain emotions[8]. The vocal bursts that were chosen were laughing, screaming in anger, sighing, gasping, crying and saying "huh?". It became apparent that the software could more reliably distinguish vocal bursts from each other that differed greatly in frequency, like sighing and screaming for example. While having a harder time with vocal bursts that did not differ a lot in frequency like sighing and gasping. This could be related to the original purpose of the software, which was to distinguish the voices of people who speak at different frequencies from each other.

In an attempt to make the software predictions more reliable and more suitable for use in the garment, lines of code were added that:

1. let the software save the predictions over half a second in an array and calculate the mode of this array and using this as its prediction over that time period, making the software put out a more reliable prediction each half second instead of putting out a prediction multiple times a second.
2. changed the prediction output based on the prediction that came before it, making the prediction of a higher value (or intensity) when the same emotion was predicted twice or thrice and decreasing this intensity when no prediction was made (thus letting the predicted emotion "cool down" instead of suddenly not predicting any emotion anymore).

The LEDs used are digital RGBW LED strips, as each LED can be programmed individually regarding colour and brightness.

First, a lot of research on these strips was done, as nobody had a lot of experience with these. Next, to expand knowledge, different patterns and colours were tested on one strip.

In order to create patterns for the six vocal bursts, research was done about how to create patterns with the strips. Each vocal burst got a pattern in its own function in the code to keep an overview. On one dress, these patterns were placed after each other in a loop to show the different patterns in sequence at demo day, showing how different vocal bursts could be expressed with the patterns and colours of LED strips.

Regarding the "main dress", one vocal burst was chosen and its pattern was put on a loop to be shown on the final demo day.

The colours related to the vocal bursts were chosen based on a research that studied the association people

have between emotions and colours. "The association between colours and emotions for emotional words and facial expressions" from Fumiyo Takahashi and Yasuhiro Kawabata[9]. Joy corresponds to the colour yellow, and thus the vocal burst laughter as a cause of joy was chosen to be displayed in yellow. Anger corresponds to the colour red, and thus the vocal burst screaming as a cause of anger was chosen to be displayed in red. Sadness corresponds to the colour blue, and thus the vocal burst crying as a cause of sadness was chosen to be displayed in blue. Fear corresponds to the colour purple, and thus the vocal burst gasping as a cause of fear was chosen to be displayed in purple. Surprise corresponds to the colour orange, and thus the vocal burst of saying "huh?" as a cause of surprise was chosen to be displayed in orange. No emotion corresponds to white, and thus the vocal burst sighing as a cause of no emotion was chosen to be displayed in white.

The patterns chosen were based on own interpretation. The pattern of laughing as a cause of joy was based on the body while laughing, which is "shocking" downward. The pattern of creaming as a cause of anger was based on the noise of screaming which is "pushed" out of the mouth. The pattern of crying as a cause of sadness was based on tears "falling" down. The pattern of gasping as a cause of fear was based on the fast reply of the body, which slowly fades away. The pattern of sighing as a cause of no emotion was based on the body while sighing, which is slowly moving downward. The pattern of saying "huh?" was based on the body while saying "huh?", which is shoulders that move upwards.

The LEDs were first attached to the undergarments by using the glue on the back of the strips. Afterwards, the strips were secured with a looping, slanting stitch. Bags for the battery packs were sewn by hand to the back of the dress. The connections between the LED strips and the LilyPad were made with conductive wire, which was sewn by hand as well.

For the final demo day, several iterations were made for the posters. Eventually, a design was chosen which places photos of different angles of the design in shapes which correspond to the lines on the dress for an elegant and simple look.

The main dress was placed on a mannequin next to the poster to grab the most attention. The dress with the moving collar was placed next to it and because the long dress was too small this one was placed on a hanger. Next to this dress a legenda was made to show which colour matched with which vocal burst. The workbook was placed on a stool so visitors could flip through it.

During the final demo day a lot of feedback was received. Feedback that was mentioned several times was that it should be tested whether people identify themselves with the colours and patterns which should correspond to the vocal bursts, because this is a very personal experience which might be different for everyone.

Furthermore, it was mentioned that the design could solve a need, but it was presented to add just an extra dimension.

It was also mentioned that our actually product is the underdress, but it isn't presented as such. This should be more apparent in the final concept.

Two other contexts for the design were also given, namely DJs and opera.

Lastly, important feedback was the fact that bluetooth doesn't work good on stage. Therefore, our setup for how to make it work in theater might not be viable.

Nevertheless, the feedback was mostly very positive. All visitors were interested in the design and would like to see this in theater.

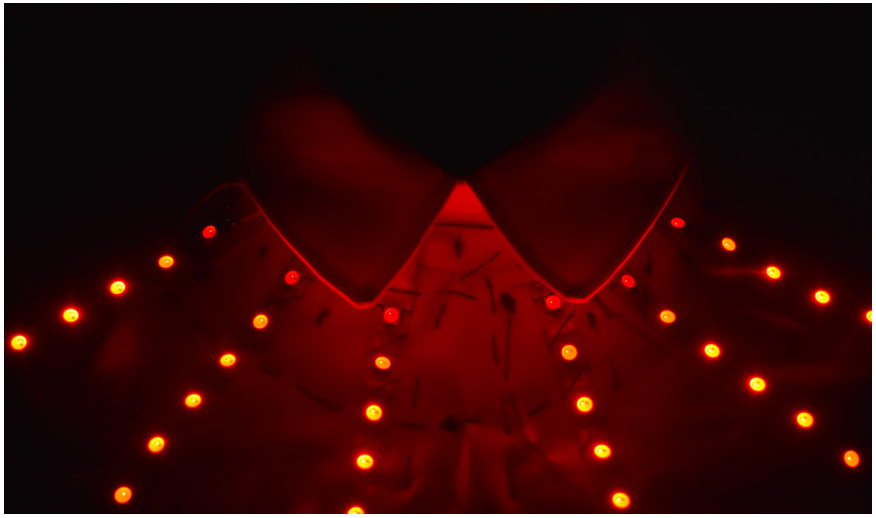

Because there was lack of support for the understanding of the lights per vocal bursts a user test was set up. This test showed each light pattern and displayed the several vocal bursts. The receiver would indicate how much he/she would indicate a vocal burst to the pattern on a scale of one to five.

The first light pattern shown in the survey, sighing, was associated most with crying by the repliers. Sighing was the second most associated vocal burst when looking at the first light pattern. The second light pattern shown in the survey, gasping, was associated most with gasping by the repliers. The third light pattern shown in the survey, crying, was associated most with crying by the repliers. Laughter was also a vocal burst many repliers associated the third light pattern with. The fourth light pattern in the survey, screaming, was associated most with screaming by the repliers. The fifth light pattern in the survey, laughing, was associated most with "huh?" by the repliers. Most repliers, however, had a small associating with the vocal burst laughing when seeing the fifth light pattern. The sixth light pattern shown in the survey, "huh?", was associated most with gasping by the repliers. "Huh?" was the second most associate vocal burst when looking at the sixth light pattern.

To conclude, according to the results of the survey, the light patterns chosen for the vocal bursts sighing, gasping, crying, screaming, and "huh?" are close to the associations with the vocal busts chosen by the repliers. The light pattern chosen for the vocal burst laughing had no close associations with the vocal bursts chosen by the repliers.

Based on the feedback from the final demo day the concept was changed slightly.

The design does not only provide an extra dimension for vocal expression of actors for experience, but also solves a need. In big plays, the people in the back do not have the possibility to experience all aspects of a play to the fullest. In particular, facial expressions, supported by vocal expression, are hard to see. The design takes the place of the facial expressions, which cannot be seen for the people in the back. For the people in the front, the design is still and an extra contribution for the experience.

Furthermore, the realisation was made that the underdress is the actual product which would be selled. From now on, it would also presented like this.

The Business Model Canvas

Date: January 8th 2020

Designed for: Thalia

Key Partners
1. electronics company (tiny tronics)
2. suppliers webshop (post NL)
3. fabric company

Key Activities
1. production
2. marketing
3. maintenance of software (Arduino IDE for LEDs and voice recognition software)
4. Training the voice recognition software

Key Resources
employees
workspace

tools:
1. electronics
2. conductive wire
3. wire
4. fabric (for the undergarment)
5. zipper

machines:
1. sewing machines

knowledge:
1. about the used electronics
2. about software (Arduino IDE and voice recognition software)

Value Propositions
an undergarment containing all the required electronics

a customizable undergarment

the undergarment is reusable for multiple theater pieces

customization of outer layer is possible

the product delivers a new experience for the audiences of the theater

voice recognition software program can be updated

software of LEDs can be updated

Customer Relationships
customers are able to buy the undergarnment on demand online by getting in contact with the company

promotion through:
1. social media
2. Word of Mouth

partner programs:
1. advertisement at theater plays

Channels
awareness created through:
1. social media
2. Word of Mouth

sell the undergarnment on online shop on demand

Customer Segment
most important customer: directors of different types of theater pieces

sellers: onlinehop which sells the undergarment on demand

Cost Structure
1. employees €2500 per month
2. manufacturing (machines) €1350,- total
3. marketing and sales €2000 per month
4. workspace €220 per month
5. product costs (electronics, yarn, conductive wire, fabric, zipper) €47,80 per piece
6. software development €800,- per month
7. maintenance webshop €45,- per month

Revenue Streams
it is a physical product (undergarnment) with software (Arduino IDE and voice recognition program

customers pay €450,- ones for the undergarnments
customers pay €200,- per month for updated software and repairments (subscription)

break-even:
10 pieces per month

revenue break-even:
€6500 per month

payment per piece of clothing and payment per subscription per month

1. QR Code Video
2. Midterm Demo Day A4 Poster
3. Final Demo Day A4 Poster
4. Sketches Garments with Notes
5. Consent Form Interview
6. Interview Questions
7. Consent Form User Test
8. User Test Questions
9. Implementation Diagram in Theater Audio System
10. Pattern for Embroidery Machine
11. Circuit Servo
12. Circuit Short Dress
13. Circuit Long Dress
14. Servo Motor Software
15. Additional Vocal Burst Recognition Software
16. LEDs Software
17. Reflection Chris Bernsen
18. Reflection Elsa van Dam
19. Reflection Kim Wintraecken

ANIMA

Different animals that use their body as a means of communication, categorized by the emotion they express.

ANIMA

fear
biomimicry
anger
courtship
body
animals
emotions
body language
facial expression
emotional expression
voice
making the intangible tangible
embodied interaction
movement
human experience
modulation
change in colour
see
sensory experience
change in patterns
hear
touch
change in shape
pressure
social interaction
fabrication techniques
clothing
taboos
layering
slashing
everyday
aesthetics
mental health
undergarment
accessible
art piece
sexuality
invisible
lightweight
conceptual
intimacy
experience
disruptive
part of a group
empowerment
formality
emotion
image
wealth
comfort
confidence

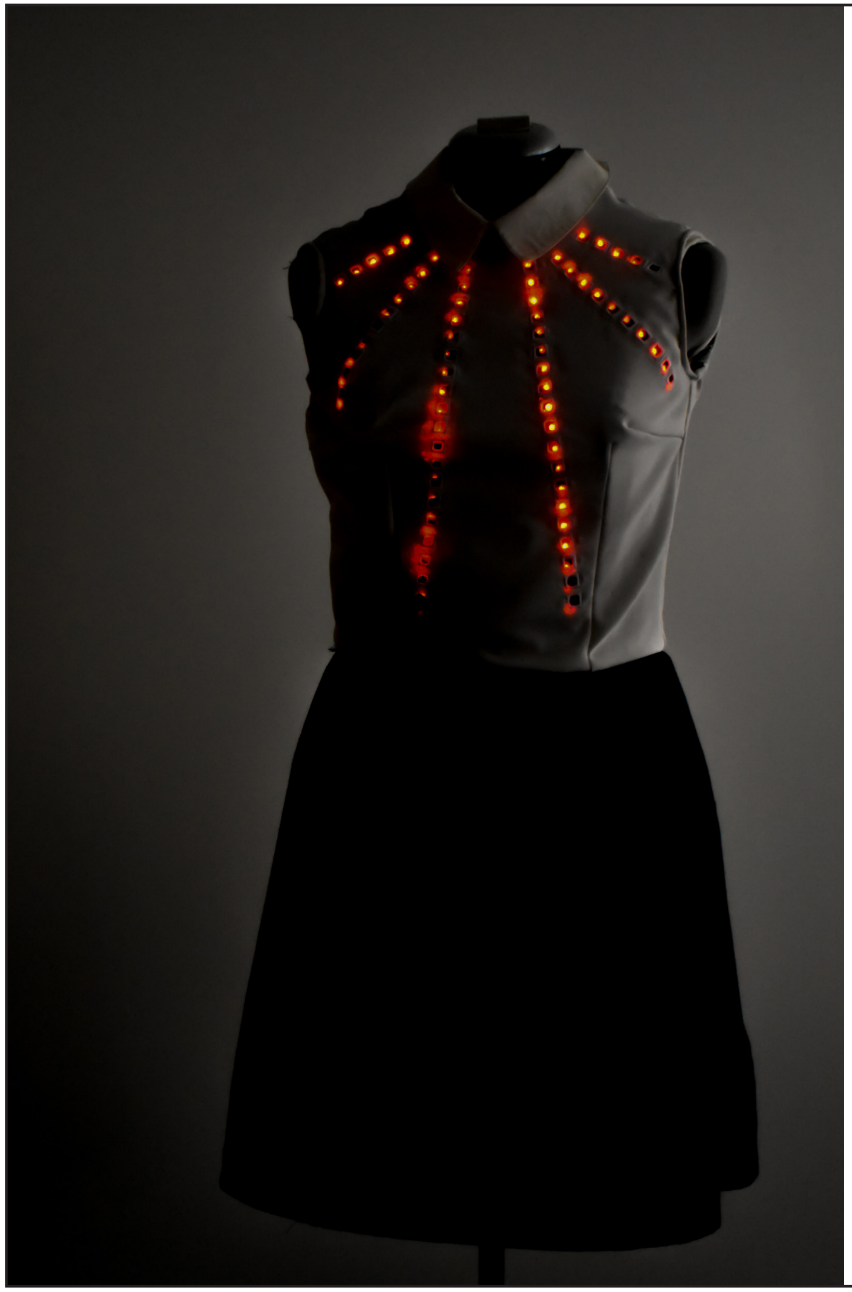

B2 / DP / Crafting Everyday Soft Things

Dresses responding to vocal bursts

THALIA

The goal of our project is to add an extra dimension to the emotional expression of actors. Therefore, we designed three dresses that respond to vocal bursts of the wearer.
The dress in the middle has integrated LED's with light patterns that correspond to emotional bursts of screaming and sighing. The long dress shows more light patterns for interesting vocal bursts and is an exploration on the diffusing of light on a long dress. The third dress has a moving collar as an exploration on other channels for translation of emotional bursts into the change of clothing. It is also an exploration on a more subtle change.
The main dress and the long dress both have an undergarment with electronics as a basis. The outer layer is changeable so it can fit to the director's wishes. Thus, a modular system is created.
With Thalia, we expand vocal expression.

Students: Kim Wintraecken (1322842), Chris Bernsen (1333453) & Elsa van Dam (1340123)

Project Coaches: Annika Hupfeld & Rong-Hao Liang

The dresses are made in collaboration with: SUMMA Fashion

The software is made in collaboration with: Rong-Hao Liang

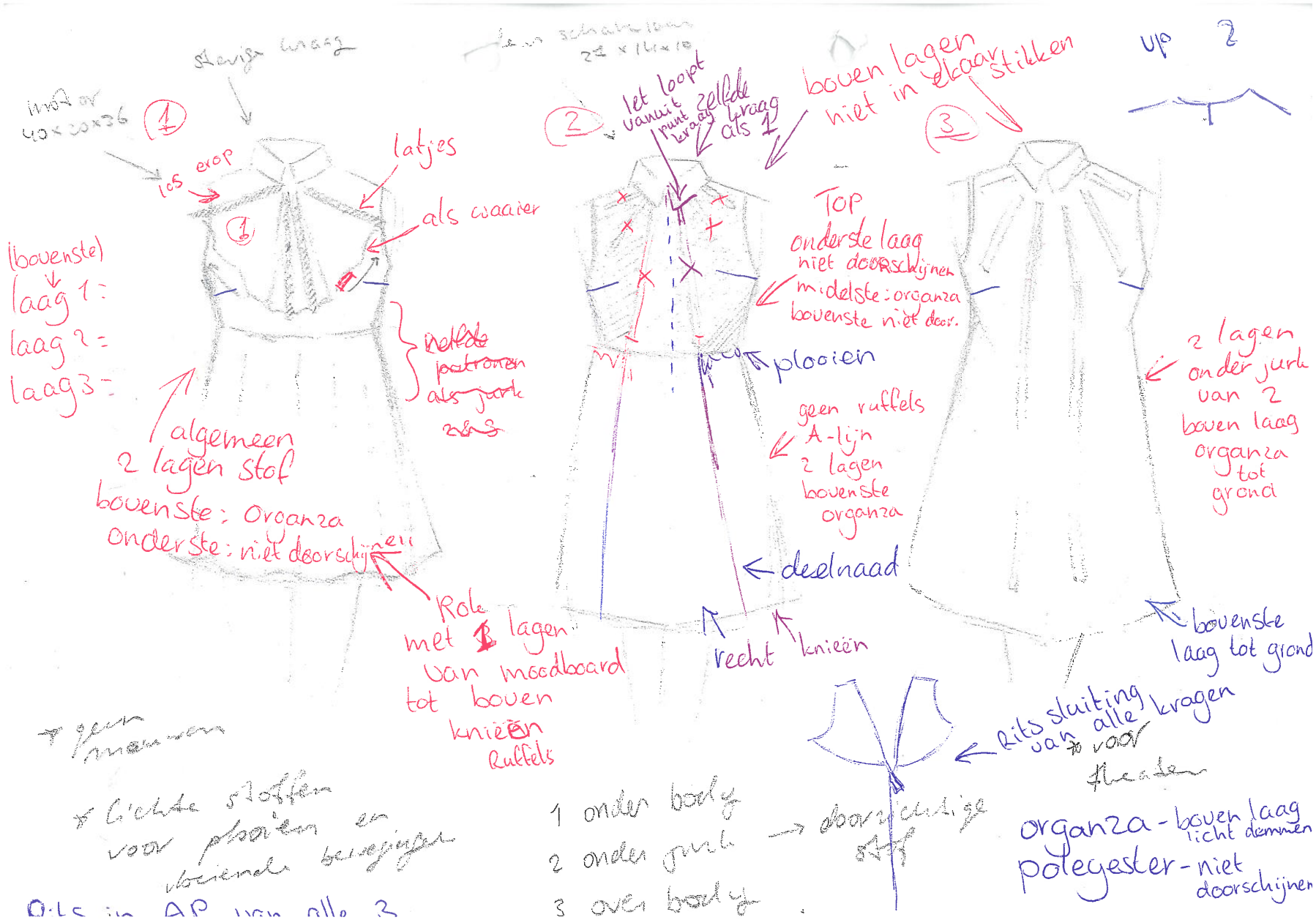
1
los erop
latjes
als waaier
(bovenste)
laag 1:
laag 2:
laag 3:
algemeen
2 lagen stof
bovenste: Organza
onderste: niet doorschijnend
Rok
met 3 lagen
van moodboard
tot boven
knieën
Ruffels
2
let loopt
vanuit
punt zelfde
kraag
als 1
bovenlagen
niet in elkaar stikken
Top
onderste laag
niet doorschijnen
middelste: organza
bovenste niet door.
plooien
geen ruffels
A-lijn
2 lagen
bovenste
organza
deelnaad
recht
knieën
3
2 lagen
onder jurk
van 2
boven laag
organza
tot
grond
bovenste
laag tot grond
rits sluiting
van alle
kragen
voor
theater
organza - boven laag
licht dennen
polyester - niet
doorschijnen
1 onder body
2 onder jurk
3 over body
doorzichtige
stof

Toestemmingsformulier interview 10-12-2019

Project 2 Industrial Design, TU/e 2019.

- Ik heb informatie gekregen en ik begrijp waar dit onderzoek over gaat en waarvoor ik geïnterviewd word. Ook kon ik vragen stellen over het onderzoek. Mijn vragen zijn voldoende beantwoord. Ik had genoeg tijd om te beslissen of ik meedoe.
- Ik weet dat meedoen vrijwillig is. Ook weet ik dat ik op ieder moment kan beslissen om toch niet mee te doen of te stoppen met het onderzoek. Daarvoor hoef ik geen reden te geven.
- Ik weet dat er een audio opname wordt gemaakt gedurende het interview waarin ik te horen ben.
- Ik weet dat sommige mensen mijn gegevens kunnen inzien. Die mensen zijn medeonderzoekers van dit onderzoek.
- Ik geef toestemming voor het verzamelen en gebruiken van mijn gegevens voor wetenschappelijke publicaties en meer of ander onderzoek op mijn gegevens.
- Ik geef toestemming om mijn gegevens op de onderzoekslocatie nog 15 jaar na dit onderzoek te bewaren.

Ik wil meedoen aan dit onderzoek.

Naam proefpersoon:
Handtekening: Datum : __ / __ / __

Ik verklaar dat ik deze proefpersoon volledig heb geïnformeerd over het genoemde onderzoek.

Als er tijdens het onderzoek informatie bekend wordt die de toestemming van de proefpersoon zou kunnen beïnvloeden, dan breng ik hem/haar daarvan tijdig op de hoogte.

Naam onderzoeker (of diens vertegenwoordiger):
Handtekening: Datum: __ / __ / __

De proefpersoon krijgt een kopie van het getekende toestemmingsformulier.

A description of the project and product concept was given.

1. Could you state your role in Doppio (the student theater association)?
2. What kind of clothing do you wear during current theater productions?
3. What are the current ways you imply the emotions of actors during theater productions?
4. Are there vocal exercises you implement to prepare for theater plays?
5. Would you be interested in using our product for a play?
6. Could the product have an added value for theater plays? If so, in what way?
7. Could the product be used for educational purposes for the actors? Could it for example be used for actors to learn how to use their voice effectively on stage?
8. Can you think of other contexts where this product could be implemented?
9. Would you and/ or other people associated with Doppio be interested in participating in a user test to test this product?

Toestemmingsformulier interview 10-12-2019

Project 2 Industrial Design, TU/e 2019.

- Ik heb informatie gekregen en ik begrijp waar dit onderzoek over gaat en waarvoor ik geïnterviewd word. Ook kon ik vragen stellen over het onderzoek. Mijn vragen zijn voldoende beantwoord. Ik had genoeg tijd om te beslissen of ik meedoe.
- Ik weet dat meedoen vrijwillig is. Ook weet ik dat ik op ieder moment kan beslissen om toch niet mee te doen of te stoppen met het onderzoek. Daarvoor hoef ik geen reden te geven.
- Ik weet dat er een audio opname wordt gemaakt gedurende het interview waarin ik te horen ben.
- Ik weet dat sommige mensen mijn gegevens kunnen inzien. Die mensen zijn medeonderzoekers van dit onderzoek.
- Ik geef toestemming voor het verzamelen en gebruiken van mijn gegevens voor wetenschappelijke publicaties en meer of ander onderzoek op mijn gegevens.
- Ik geef toestemming om mijn gegevens op de onderzoekslocatie nog 15 jaar na dit onderzoek te bewaren.

Ik wil meedoen aan dit onderzoek.

Naam proefpersoon:
Handtekening: Datum : __ / __ / __

Ik verklaar dat ik deze proefpersoon volledig heb geïnformeerd over het genoemde onderzoek.

Als er tijdens het onderzoek informatie bekend wordt die de toestemming van de proefpersoon zou kunnen beïnvloeden, dan breng ik hem/haar daarvan tijdig op de hoogte.

Naam onderzoeker (of diens vertegenwoordiger):
Handtekening: Datum: __ / __ / __

De proefpersoon krijgt een kopie van het getekende toestemmingsformulier.

Project 2 User Test

For our project, we have created an undergarment that displays different light patterns on its front side when the wearer uses a certain vocal burst. Vocal bursts are non-verbal exclamations that can convey certain emotions.

This undergarment is to be used in theatre productions, where actors will be wearing the undergarment. This product will then add another form of emotional expression based on the vocal output of the actors.

This user test serves the purpose of testing which vocal bursts are associated with these light patterns.

Below you will be shown videos a series of light patterns. You will be asked to indicate how much you associate each listed vocal burst with each light pattern, numbered 1 through 6.

You will do this by noting a number between 1 (one) and 5 (five) at each vocal burst, where 1 stands for a very low association and 5 for a very high association.

You are also free to write down any other comments or associations you have with each light pattern below.

When clicking on the links below, you can listen to examples of the vocal bursts.

Crying: https://drive.google.com/open?id=1sGWC2_ICDi9-oP5CxXGR5zGh3KBEOEJh

Sighing: https://drive.google.com/open?id=1oRrlaUWonymkOFgo1wJ2lxLcKDKlEcqM

Screaming in anger: https://drive.google.com/open?id=19-N6v114sN8CV8FjyFz-lEVkQNksvgXs

"Huh?": https://drive.google.com/open?id=1kWLlcNmXg9nusLf9EVW4FtGrg02yM7Aa

Laughing: https://drive.google.com/open?id=10t9-FkqIxqU7NSH3aHcQx5Rhxqdp1krw

Gasping in surprise: https://drive.google.com/open?id=1ZO-x6nG8rIOQb58gAI-R_cNnXnJGH2-n

Light pattern 1

http://youtube.com/watch?v=aknIHhXVttY

1. **Crying**
   Markeer slechts één ovaal.

	1	2	3	4	5	
Very low association	◯	◯	◯	◯	◯	Very high association

2. **Sighing**
   Markeer slechts één ovaal.

	1	2	3	4	5	
Very low association	◯	◯	◯	◯	◯	Very high association

3. **Screaming in anger**
   Markeer slechts één ovaal.

	1	2	3	4	5	
Very low association	◯	◯	◯	◯	◯	Very high association

4. **"Huh?"**
   Markeer slechts één ovaal.

	1	2	3	4	5	
Very low association	◯	◯	◯	◯	◯	Very high association

5. **Laughing**
   Markeer slechts één ovaal.

	1	2	3	4	5	
Very low association	◯	◯	◯	◯	◯	Very high association

6. **Gasping in surprise**
   Markeer slechts één ovaal.

	1	2	3	4	5	
Very low association	◯	◯	◯	◯	◯	Very high association

7. **Other comments or associations with light pattern 1?**

Light pattern 2

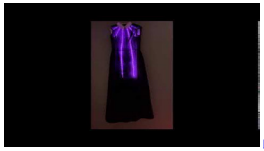

http://youtube.com/watch?v=jGEkHjgBkJs

8. **Crying**
   Markeer slechts één ovaal.

	1	2	3	4	5	
Very low association	◯	◯	◯	◯	◯	Very high association

9. **Sighing**
   Markeer slechts één ovaal.

	1	2	3	4	5	
Very low association	◯	◯	◯	◯	◯	Very high association

10. **Screaming in anger**
    Markeer slechts één ovaal.

	1	2	3	4	5	
Very low association	◯	◯	◯	◯	◯	Very high association

11. **"Huh?"**
    Markeer slechts één ovaal.

	1	2	3	4	5	
Very low association	◯	◯	◯	◯	◯	Very high association

12. **Laughing**
    Markeer slechts één ovaal.

	1	2	3	4	5	
Very low association	◯	◯	◯	◯	◯	Very high association

13. **Gasping in surprise**
    Markeer slechts één ovaal.

	1	2	3	4	5	
Very low association	◯	◯	◯	◯	◯	Very high association

14. **Other comments or associations with light pattern 2?**

Light pattern 3

http://youtube.com/watch?v=Ryuko_ifqLo

15. **Crying**
Markeer slechts één ovaal.

	1	2	3	4	5	
Very low association	◯	◯	◯	◯	◯	Very high association

16. **Sighing**
Markeer slechts één ovaal.

	1	2	3	4	5	
Very low association	◯	◯	◯	◯	◯	Very high association

17. **Screaming in anger**
Markeer slechts één ovaal.

	1	2	3	4	5	
Very low association	◯	◯	◯	◯	◯	Very high association

18. **"Huh?"**
Markeer slechts één ovaal.

	1	2	3	4	5	
Very low association	◯	◯	◯	◯	◯	Very high association

19. **Laughing**
Markeer slechts één ovaal.

	1	2	3	4	5	
Very low association	◯	◯	◯	◯	◯	Very high association

20. **Gasping in surprise**
Markeer slechts één ovaal.

	1	2	3	4	5	
Very low association	◯	◯	◯	◯	◯	Very high association

21. **Other comments or associations with light pattern 3?**

Light pattern 4

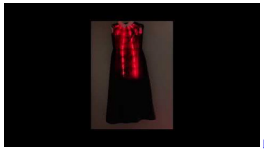
http://youtube.com/watch?v=mlKagKBwrQ4

22. **Crying**
Markeer slechts één ovaal.

	1	2	3	4	5	
Very low association	◯	◯	◯	◯	◯	Very high association

23. **Sighing**
Markeer slechts één ovaal.

	1	2	3	4	5	
Very low association	◯	◯	◯	◯	◯	Very high association

24. **Screaming in anger**
Markeer slechts één ovaal.

	1	2	3	4	5	
Very low association	◯	◯	◯	◯	◯	Very high association

25. **"Huh?"**
Markeer slechts één ovaal.

	1	2	3	4	5	
Very low association	◯	◯	◯	◯	◯	Very high association

26. **Laughing**
Markeer slechts één ovaal.

	1	2	3	4	5	
Very low association	◯	◯	◯	◯	◯	Very high association

27. **Gasping in surprise**
Markeer slechts één ovaal.

	1	2	3	4	5	
Very low association	◯	◯	◯	◯	◯	Very high association

28. **Other comments or associations with light pattern 4?**

Light pattern 5

http://youtube.com/watch?v=Ew9k7FpB018

29. **Crying**
Markeer slechts één ovaal.

	1	2	3	4	5	
Very low association	◯	◯	◯	◯	◯	Very high association

30. **Sighing**
Markeer slechts één ovaal.

	1	2	3	4	5	
Very low association	◯	◯	◯	◯	◯	Very high association

31. **Screaming in anger**
Markeer slechts één ovaal.

	1	2	3	4	5	
Very low association	◯	◯	◯	◯	◯	Very high association

32. **"Huh?"**
Markeer slechts één ovaal.

	1	2	3	4	5	
Very low association	◯	◯	◯	◯	◯	Very high association

33. **Laughing**
Markeer slechts één ovaal.

	1	2	3	4	5	
Very low association	◯	◯	◯	◯	◯	Very high association

34. **Gasping in surprise**
Markeer slechts één ovaal.

	1	2	3	4	5	
Very low association	◯	◯	◯	◯	◯	Very high association

35. **Other comments or associations with light pattern 5?**

Light pattern 6

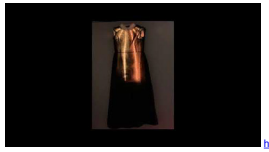

http://youtube.com/watch?v=Xcd6cRZSLUA

36. **Crying**
Markeer slechts één ovaal.

	1	2	3	4	5	
Very low association	◯	◯	◯	◯	◯	Very high association

37. **Sighing**
Markeer slechts één ovaal.

	1	2	3	4	5	
Very low association	◯	◯	◯	◯	◯	Very high association

38. **Screaming in anger**
Markeer slechts één ovaal.

	1	2	3	4	5	
Very low association	◯	◯	◯	◯	◯	Very high association

39. **"Huh?"**
Markeer slechts één ovaal.

	1	2	3	4	5	
Very low association	◯	◯	◯	◯	◯	Very high association

40. **Laughing**
Markeer slechts één ovaal.

	1	2	3	4	5	
Very low association	◯	◯	◯	◯	◯	Very high association

41. **Gasping in surprise**
Markeer slechts één ovaal.

	1	2	3	4	5	
Very low association	◯	◯	◯	◯	◯	Very high association

42. **Other comments or associations with light pattern 6?**

Mogelijk gemaakt door Google Forms

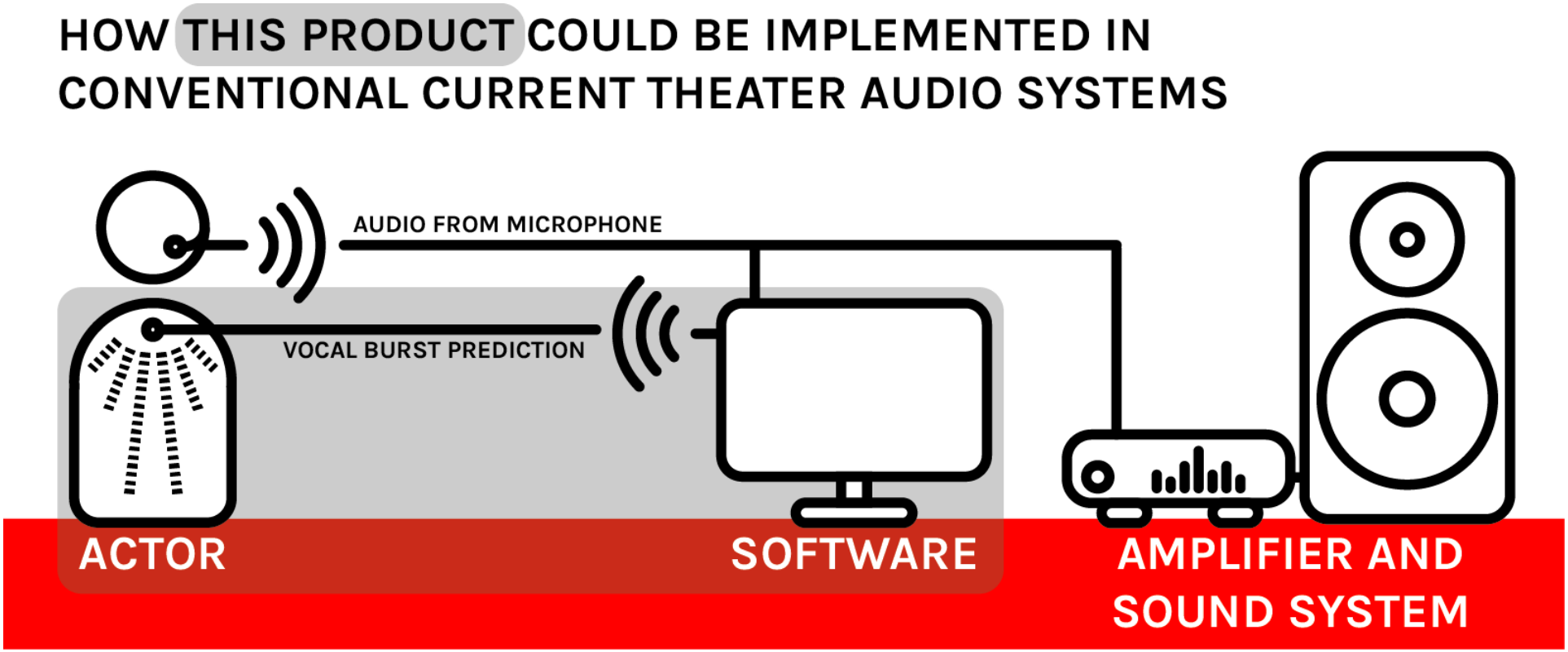
HOW THIS PRODUCT COULD BE IMPLEMENTED IN CONVENTIONAL CURRENT THEATER AUDIO SYSTEMS
AUDIO FROM MICROPHONE
VOCAL BURST PREDICTION
ACTOR
SOFTWARE
AMPLIFIER AND SOUND SYSTEM

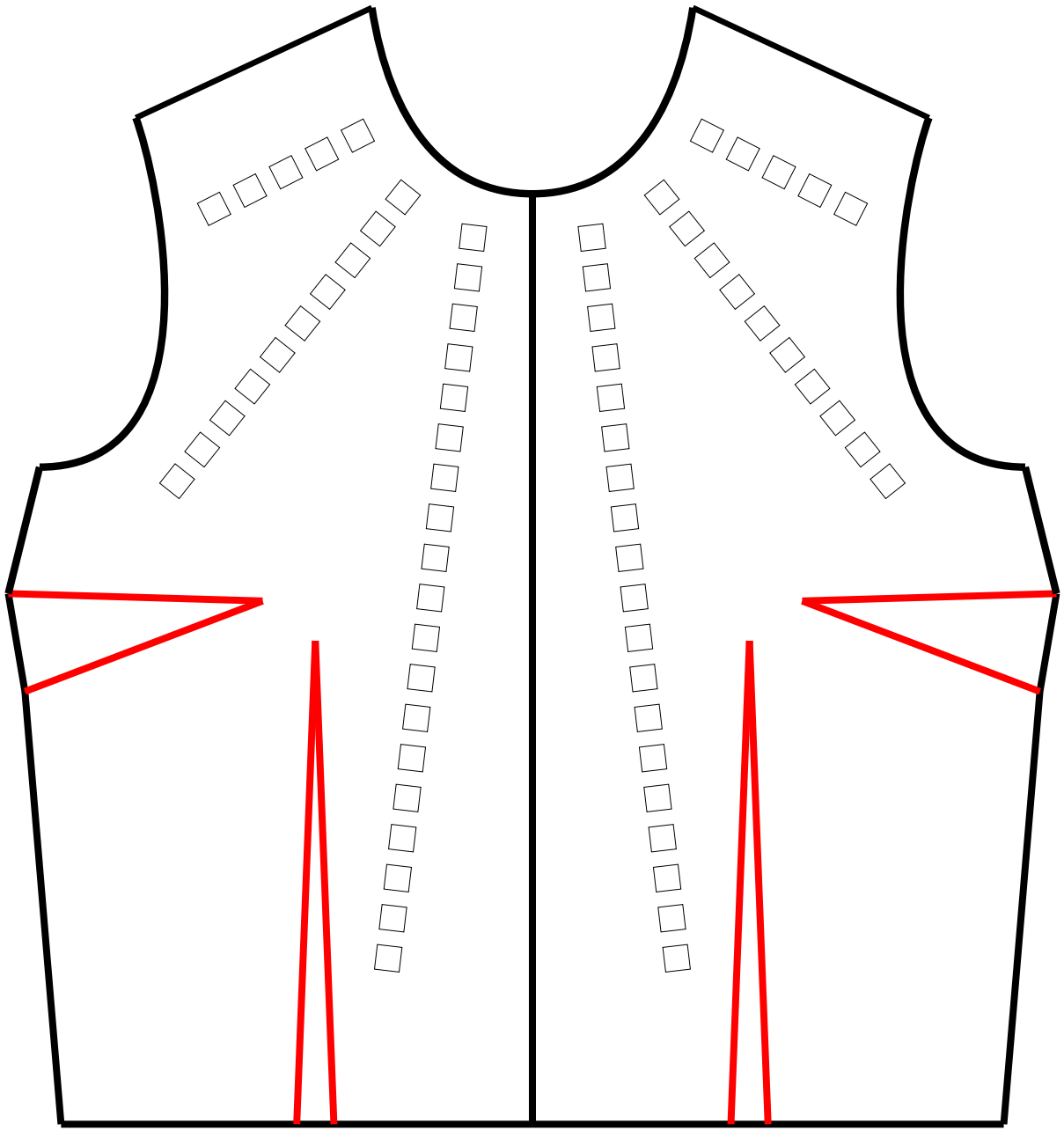

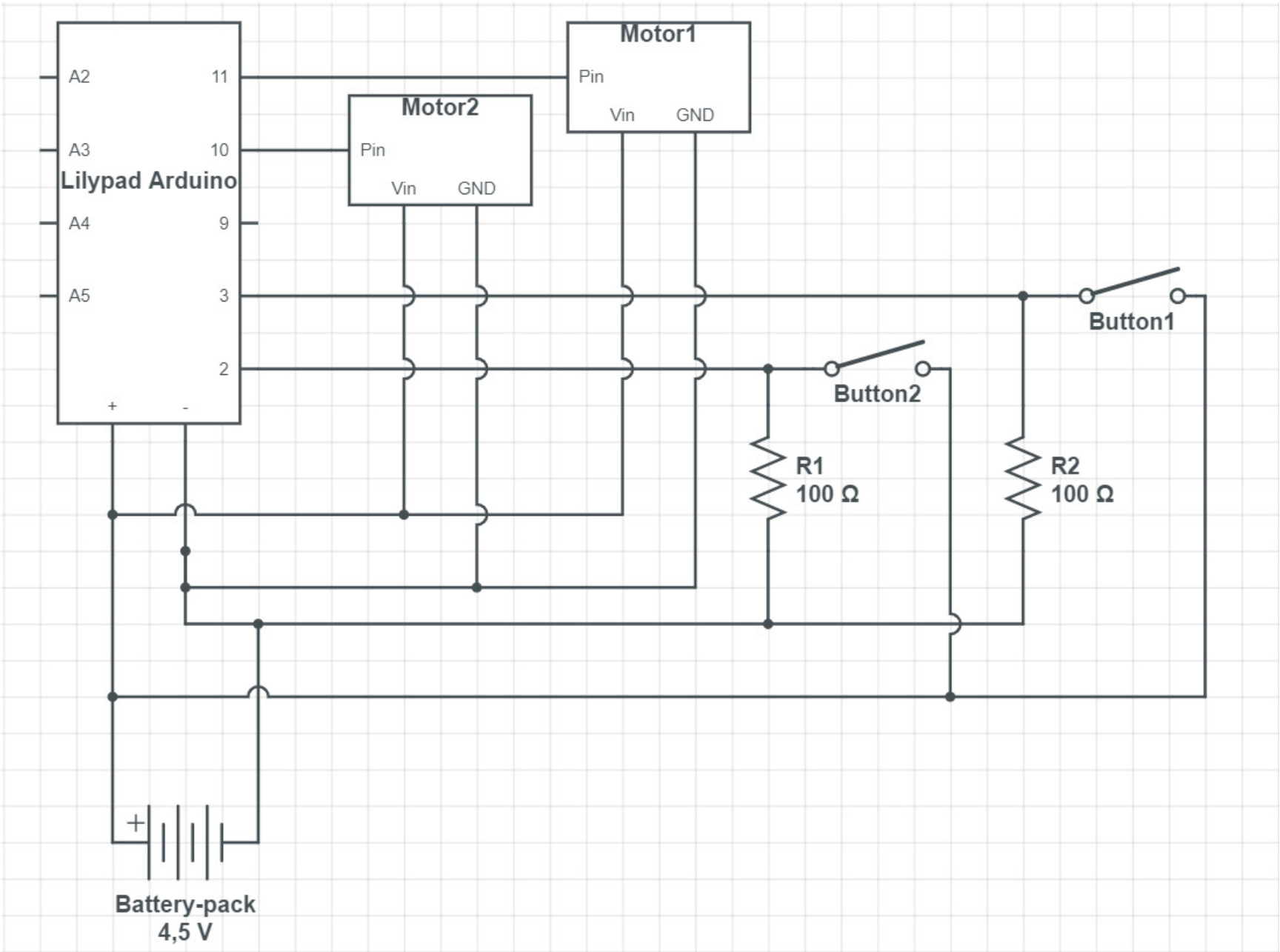
Motor1
Pin
Vin
GND
Motor2
Pin
Vin
GND
A2
11
A3
10
Lilypad Arduino
A4
9
A5
3
2
+
-
Button1
Button2
R1
100 Ω
R2
100 Ω
+
Battery-pack
4,5 V

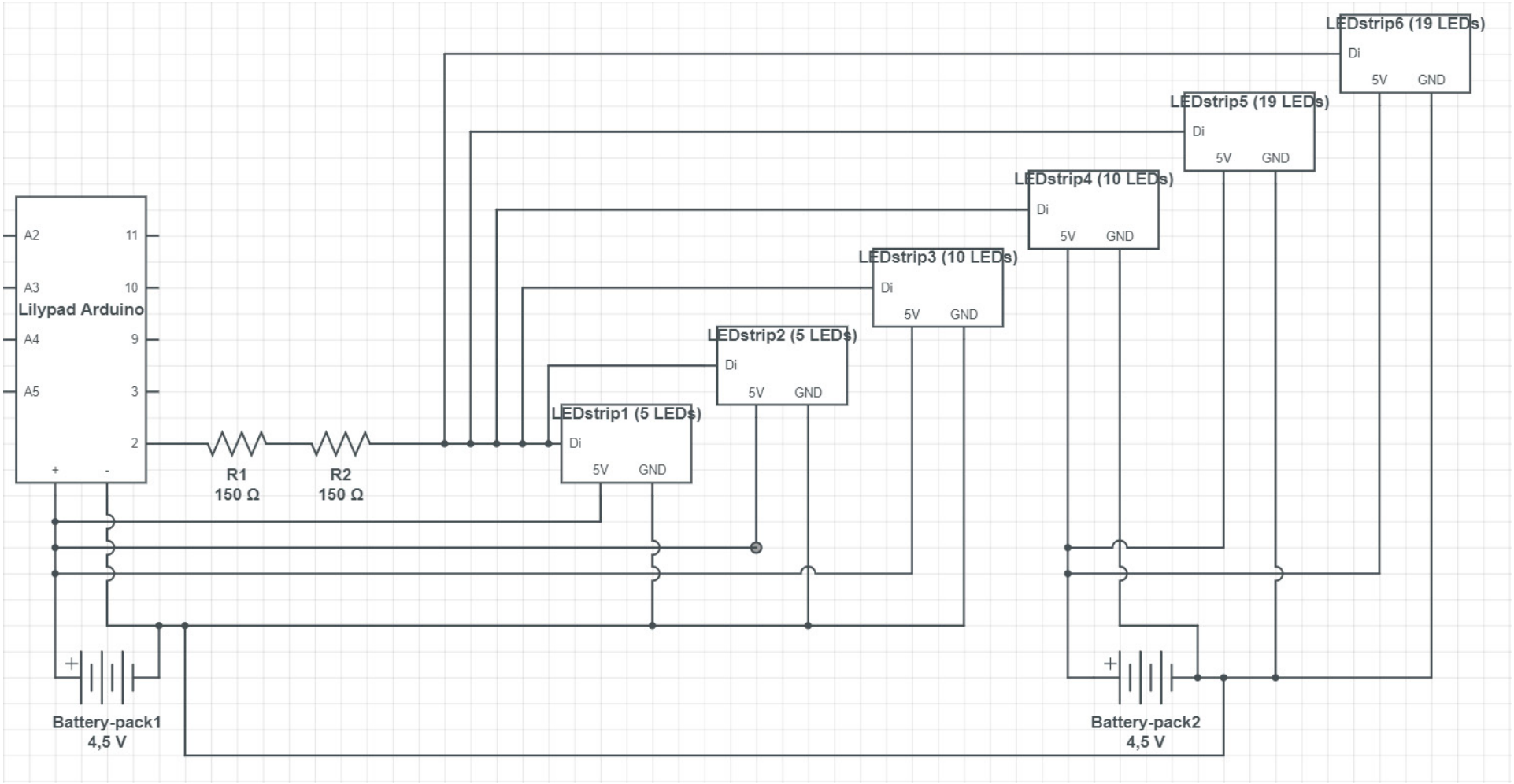
LEDstrip6 (19 LEDs)
Di
5V
GND
LEDstrip5 (19 LEDs)
Di
5V
GND
LEDstrip4 (10 LEDs)
Di
5V
GND
LEDstrip3 (10 LEDs)
Di
5V
GND
LEDstrip2 (5 LEDs)
Di
5V
GND
LEDstrip1 (5 LEDs)
Di
5V
GND
A2
11
A3
10
Lilypad Arduino
A4
9
A5
3
2
+
-
R1
150 Ω
R2
150 Ω
Battery-pack1
4,5 V
Battery-pack2
4,5 V

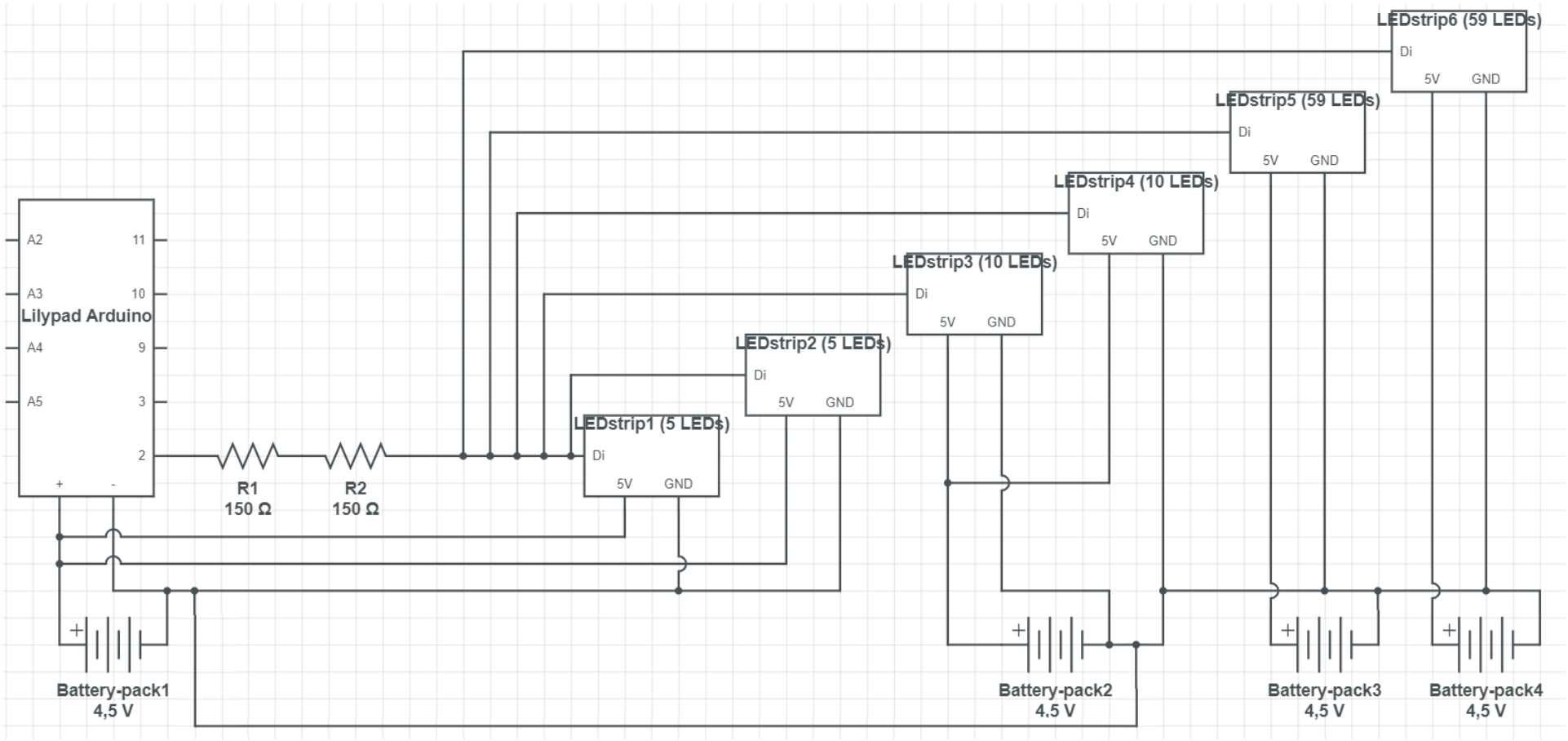
LEDstrip6 (59 LEDs)
Di
5V GND
LEDstrip5 (59 LEDs)
Di
5V GND
LEDstrip4 (10 LEDs)
Di
5V GND
LEDstrip3 (10 LEDs)
Di
5V GND
LEDstrip2 (5 LEDs)
Di
5V GND
LEDstrip1 (5 LEDs)
Di
5V GND
A2 11
A3 10
Lilypad Arduino
A4 9
A5 3
2
+ -
R1
150 Ω
R2
150 Ω
Battery-pack1
4,5 V
Battery-pack2
4,5 V
Battery-pack3
4,5 V
Battery-pack4
4,5 V

```
// code Project 2 Thalia
// made by Elsa van Dam, Chris Bernsen, Kim Wintraecken
#include <Servo.h>

int servo1Pin = 0;
int servo2Pin = 1;

int button1Pin = 11;
int button2Pin = 12;

int button1State = 0;
int button2State = 0;

Servo Servo1;
Servo Servo2;

void setup() {
  Servo1.attach(servo1Pin);
  Servo2.attach(servo2Pin);

  pinMode(button1Pin, INPUT);
  pinMode(button2Pin, INPUT);

  Serial.begin(9600);
}
void loop(){
 button1State = digitalRead(button1Pin);
 button2State = digitalRead(button2Pin);


 if(button1State == HIGH){
 Servo1.write(95);
 Servo2.write(80);
 }

 if (button2State == HIGH){
  Servo1.write(80);
  Servo2.write(95);
 }

 if (button1State == LOW && button2State == LOW)
{
  Servo1.write(90);
  Servo2.write(90);
 }
}
```

```
// code Project 2 Thalia
// made by Elsa van Dam, Chris Bernsen, Kim Wintraecken
import java.util.Map;

int timeInterval = 30;
int[] predArray = new int[timeInterval];

int correctPred = -1;
int lastcorrectPred = -1;
int intensPred = -1;
int intenslevel = 0;
int finalPred;
int time = 0;
boolean prediction = false;

void draw()
{
  correctPredictions3();
}

void correctPredictions3() {
  lastcorrectPred = correctPred;
  if (prediction == false) predArray[time] = -1;
  if (prediction == true) predArray[time] = lastPredY;
  time += 1;
  if (time == timeInterval) {
    //println(lastcorrectPred);
    correctPred = mode(predArray).get(0);
    //println(correctPred);
      if (correctPred > -1 && correctPred < 10 && correctPred != lastcorrectPred) intensPred = correctPred;
    if (correctPred == lastcorrectPred && correctPred != -1 && intensPred <20) intensPred += 10;
    if (correctPred == -1) intensPred -= 10;
    if (intensPred < -1) intensPred = -1;
   println(intensPred); //intensPred is the final prediction value to be communicated to the electronics.
    time = 0;
  }
}

/*
The following code enables calculating the statistical mode of an array. The code is retrieved from:
https://forum.processing.org/two/discussion/25973/calculate-the-statistical-mode-most-frequent-value-in-processing
where it was posted by user "xxMrPHDxx" on January 2018
*/

ArrayList<Integer> mode(int[] array) {
  int mode = 0;
  Map<Integer, Integer> map = new HashMap();

  for (int i=0; i<array.length; i++) {
    if (map.get(array[i]) == null) {  // Check if specific key didn't exists
      map.put(array[i], 1);
    } else {                          // Key does exists
      int count = map.get(array[i]);
      count++;
      map.remove(array[i]);
      map.put(array[i], count);
    }
  }

  // Update the highest count
  for (int i=0; i<array.length; i++) {
    int count = map.get(array[i]);
    if (count > mode) {
      mode = count;
    }
  }

  // Get all values with the highest mode
  ArrayList<Integer> m = new ArrayList();
  for (int i=0; i<array.length; i++) {
  if(map.get(array[i])==mode&&!m.contains(array[i]))
{
      m.add(array[i]);
    }
  }

  return m;
}
```

```
// code partly retrieved from https://www.tweaking4all.nl/hardware/arduino/adruino-led-strip-effecten/
// code Project 2 Thalia
// made by Elsa van Dam, Chris Bernsen, Kim Wintraecken
// dress 2: This dress only shows the vocal burst sreaming as a cause of anger. The lights will continuously run down the LED strip in the colour red in the given pattern

#include <Adafruit_NeoPixel.h>
#define PIN 2
#define NUM_LEDS 68

Adafruit_NeoPixel strip = Adafruit_NeoPixel(NUM_LEDS, PIN, NEO_GRBW + NEO_KHZ800);

void setup() {
  strip.begin();
  strip.show(); // Initialize all pixels to 'off'
}

// *** REPLACE FROM HERE ***
void loop() {
  scream(0xff, 0x00, 0x00, 50);
}

void scream(byte red, byte green, byte blue, int WaveDelay) {
    int Position=0;
  for(int j=0; j<NUM_LEDS*2; j++)
  {
    Position++; // = 0; //Position + Rate;
    for(int i=0; i<NUM_LEDS; i++) {
      setPixel(i,((sin(i-Position) * 127 + 128)/255)*red,
              ((sin(i-Position) * 127 + 128)/255)*green,
              ((sin(i-Position) * 127 + 128)/255)*blue);
    }

    showStrip();
    delay(WaveDelay);
  }
}

void showStrip() {
 #ifdef ADAFRUIT_NEOPIXEL_H
   // NeoPixel
   strip.show();
 #endif
}

void setPixel(int Pixel, byte red, byte green, byte blue) {
 #ifdef ADAFRUIT_NEOPIXEL_H
   // NeoPixel
      strip.setPixelColor(Pixel, strip.Color(red, green, blue));
 #endif
}

void setAll(byte red, byte green, byte blue) {
  for(int i = 0; i < NUM_LEDS; i++ ) {
    setPixel(i, red, green, blue);
  }
  showStrip();
}
```

code LEDs:

```
// code partly retrieved from https://www.tweaking4all.nl/hardware/arduino/adruino-led-strip-effecten/
// code Project 2 Thalia
// made by Elsa van Dam, Chris Bernsen, Kim Wintraecken
// dress 3: This dress shows the follwoing vocal bursts:
// 1) sighing as a cause of no emotion. the light will run down the led strip in white in the given pattern and will turn off in the given pattern.
// 2) gasping as a cause of fear. the LED strip wil turn on in the colour purple and the lights will slowly fade out after a while.
// 3) sreaming as a cause of anger. The light will run down the LED strip in the colour red in the given pattern.
// 4) laughing as a cause of joy. The lights will run down the LED strip in the colour yellow in the given pattern.
// 5) saying "huh?" as a cause of surprise. The lights start at the bottom of the strip and go upwards in the colour orange.

#include <Adafruit_NeoPixel.h>
#define PIN 2
#define NUM_LEDS 128
```

```
Adafruit_NeoPixel strip = Adafruit_NeoPixel(NUM_
LEDS, PIN, NEO_GRBW + NEO_KHZ800);



void setup() {
  strip.begin();
  strip.show(); // Initialize all pixels to 'off'
}

// *** REPLACE FROM HERE ***
void loop() {
  sigh();
  sigh();
  sigh();
  delay(500);
  gasp(230, 66, 245);
  gasp(230, 66, 245);
  gasp(230, 66, 245);
  delay(500);
  long noTimes = crying(55,120,15);
  delay(500);
  scream(0xff, 0x00, 0x00, 50);
   delay(500);
  laughing(255, 255, 0, 10, 64, true, 30);
  laughing(255, 255, 0, 10, 64, true, 30);
  laughing(255, 255, 0, 10, 64, true, 30);
  laughing(255, 255, 0, 10, 64, true, 30);
  laughing(255, 255, 0, 10, 64, true, 30);
  delay(500);
  huh();
  huh();
  huh();
  delay(500);
}



void sigh() {
  for(uint32_t i=0; i<NUM_LEDS; i++) {
  strip.setPixelColor(i, 200,200,200,0);
  strip.show();
  delay(50);
  }
  for(uint32_t j=0; j<NUM_LEDS; j++){
  strip.setPixelColor(j,0, 0, 0, 0);
strip.show();
delay(50);
  }
}

void gasp(byte red, byte green, byte blue){
   float r, g, b;

  for(int k = 0; k < 256; k=k+1) {
    r = (k/256.0)*red;
    g = (k/256.0)*green;
    b = (k/256.0)*blue;
    strip.setPixelColor(k, r,g,b,0);
    setAll(r,g,b);
    strip.show();
  }

  for(int k = 255; k >= 0; k=k-2) {
    r = (k/256.0)*red;
    g = (k/256.0)*green;
    b = (k/256.0)*blue;
    strip.setPixelColor(k, r,g,b,0);
    setAll(r,g,b);
    strip.show();
  }
}

long crying (int Cooling, int Sparking, int SpeedDelay)
{
   long randomNumber = random(500);
  for (int i=1; i<= randomNumber; i++) {
  static byte heat[NUM_LEDS];
  int cooldown;

  // Step 1.  Cool down every cell a little
  for( int i = 0; i < NUM_LEDS; i++) {
   cooldown = random(0, ((Cooling * 10) / NUM_LEDS)
+ 2);
```

```
    if(cooldown>heat[i]) {
      heat[i]=0;
    } else {
      heat[i]=heat[i]-cooldown;
    }
  }

  // Step 2.  Heat from each cell drifts 'up' and diffuses a little
  for( int k= NUM_LEDS - 1; k >= 2; k--) {
    heat[k] = (heat[k - 1] + heat[k - 2] + heat[k - 2]) / 3;
  }

  // Step 3.  Randomly ignite new 'sparks' near the bottom
  if( random(255) < Sparking ) {
    int y = random(7);
    heat[y] = heat[y] + random(160,255);
    //heat[y] = random(160,255);
  }

  // Step 4.  Convert heat to LED colors
  for( int j = 0; j < NUM_LEDS; j++) {
    setPixelHeatColor(j, heat[j] );
  }
  strip.show();
  delay(SpeedDelay);
  }
}

void setPixelHeatColor (int Pixel, byte temperature) {
  // Scale 'heat' down from 0-255 to 0-191
  byte t192 = round((temperature/255.0)*191);

  // calculate ramp up from
  byte heatramp = t192 & 0x3F; // 0..63
  heatramp <<= 2; // scale up to 0..252

  // figure out which third of the spectrum we're in:
  if( t192 > 0x80) {                    // hottest
    setPixel(Pixel, 255, 255, heatramp);
  } else if( t192 > 0x40 ) {            // middle
    setPixel(Pixel, 100, 100, heatramp);
  } else {                              // coolest
    setPixel(Pixel, 0, 0, heatramp);
  }
}

void scream(byte red, byte green, byte blue, int WaveDelay) {
    int Position=0;

  for(int j=0; j<NUM_LEDS*2; j++)
  {
      Position++; // = 0; //Position + Rate;
      for(int i=0; i<NUM_LEDS; i++) {
        // sine wave, 3 offset waves make a rainbow!
      //float level = sin(i+Position) * 127 + 128;
      //setPixel(i,level,0,0);
      //float level = sin(i+Position) * 127 + 128;
      setPixel(i,((sin(i-Position) * 127 + 128)/255)*red,
              ((sin(i-Position) * 127 + 128)/255)*green,
              ((sin(i-Position) * 127 + 128)/255)*blue);
    }

    strip.show();
    delay(WaveDelay);
  }
}

void laughing(byte red, byte green, byte blue, byte meteorSize, byte meteorTrailDecay, boolean meteorRandomDecay, int SpeedDelay) {
  setAll(0,0,0);

  for(int i = 0; i < NUM_LEDS+NUM_LEDS; i++) {

    // fade brightness all LEDs one step
    for(int j=0; j<NUM_LEDS; j++) {
      if( (!meteorRandomDecay) || (random(10)>5) ) {
        fadeToBlack(j, meteorTrailDecay );
      }
    }

    // draw meteor
```

```
    for(int j = 0; j < meteorSize; j++) {
      if( ( i-j <NUM_LEDS) && (i-j>=0) ) {
        setPixel(i-j, red, green, blue);
      }
    }

    strip.show();
    delay(SpeedDelay);
  }
}

void fadeToBlack(int ledNo, byte fadeValue) {
 #ifdef ADAFRUIT_NEOPIXEL_H
    // NeoPixel
    uint32_t oldColor;
    uint8_t r, g, b;
    int value;

    oldColor = strip.getPixelColor(ledNo);
    r = (oldColor & 0x00ff0000UL) >> 16;
    g = (oldColor & 0x0000ff00UL) >> 8;
    b = (oldColor & 0x000000ffUL);

    r=(r<=10)? 0 : (int) r-(r*fadeValue/256);
    g=(g<=10)? 0 : (int) g-(g*fadeValue/256);
    b=(b<=10)? 0 : (int) b-(b*fadeValue/256);

    strip.setPixelColor(ledNo, r,g,b);
 #endif
 #ifndef ADAFRUIT_NEOPIXEL_H
   // FastLED
   leds[ledNo].fadeToBlackBy( fadeValue );
 #endif
}

void huh() {
  for(uint16_t m = NUM_LEDS; m > 0; m = m - 1) {
      // Turn our current led on to COLOUR, then show the leds
      strip.setPixelColor(m, 252,86,3,0);

       // Show the leds (only one of which is set to blue, from above)
     strip.show();
     delay(10);
}
for(uint16_t n = NUM_LEDS; n > 0; n = n - 1) {
       // Turn our current led on to COLOUR, then show the leds
      strip.setPixelColor(n, 0,0,0,0);
       // Show the leds (only one of which is set to blue, from above)
     strip.show();
     delay(50);
}
}

void showStrip() {
 #ifdef ADAFRUIT_NEOPIXEL_H
   // NeoPixel
   strip.show();
 #endif
}

void setPixel(int Pixel, byte red, byte green, byte blue) {
 #ifdef ADAFRUIT_NEOPIXEL_H
   // NeoPixel
       strip.setPixelColor(Pixel, strip.Color(red, green, blue));
 #endif
}

void setAll(byte red, byte green, byte blue) {
  for(int i = 0; i < NUM_LEDS; i++ ) {
    setPixel(i, red, green, blue);
  }
  showStrip();
}
```

At the start of this project, I made note of some learning points that I wanted to take out of this project. I knew that I wanted to particularly focus on clothing during this project and implementing electronics and code into it. Another one being that I wanted to actively involve users in the design process, even in the very early stages of the process.

As soon as I got access to the wearable senses lab during this project, I immediately started with exploring and making prototypes with fabric. Doing so, I learned how to make fabric patterns from my own measurements and using that and the machines to produce some simple articles of clothing made to fit my own body. This experience opens up the ability for me to use fabrics as materials for prototyping in future projects. I find this an important skill to have because it removes the limitation of not being able to use these materials in the past and thus allowing me to experiment with more materials for designing a product.

During this project, I got to work with a software our tutor wrote in Processing. Since I had already had some experience with Processing during a previous course, I was able to understand how the code functioned in a broad sense. This allowed me to make changes and additions to the code and add features the software needed for our project specifically. I found it very exciting to work with code that was a lot more advanced than any I had worked with before, and this made me eager to work on it whenever I got to during the project. This experience has made me more motivated to learn more about writing code to develop interactive software and products during the continuation of this study and has among other things let me to choose Creative Apps as an elective course for next quartile and doing a computer programming minor in my third year. The reason I find it important to learn more about this skill is because I find it important for me as a designer to not only try having a very broad skillset, but also have a specialization in select skills, like computer programming.

A large part of our project also consisted of implementing electronics using Arduino. While a different teammate took it upon herself to do the majority of the work of this, I also involved myself with it by making some circuits but also by helping her with her work when she ran into any problems. Overall this experience has made me become more comfortable with working with electronics. I do however feel like I could have progressed more within this skill were I to start earlier during the project with working with electronics. During the project I received an interesting insight from my teacher coach when she said that I should not approach projects with the goal of producing the best product possible, but to use it as a tool to achieve my learning goals and prioritize this over making the best product. This insight enabled me to try more things during the project by removing a fear of doing something wrong. Looking back I found it important that I got this insight since it will enable to learn more from projects in the future.

During the project we also got to work together with fashion students. Since we were very clear in the requirements of the articles of clothing and met up with them every week to see their progress, the items that they delivered largely lined up with our expectations. We also let them help us in making choices about for example which fabrics to use and what to look out for when designing articles of clothing. Overall this collaboration was a very positive experience for me and made me learn about the importance of clear communication when conveying concepts and ideas to others, and to use and rely on the knowledge and expertise of others to come to a better final product.

Reflecting on how we as a group worked together, I really liked the fact that all of us tried to evenly contribute to the project and that there was no clear leader or slacker in the group. Looking back at other projects as well, I tend to prefer this non-hierarchical way of working. I do however feel like during the project, the three of us were perhaps not as pro-active during parts of the project as needed, making our progress in these times slow. In this case, it would have helped if someone took it upon themselves to lead or motivate the group more, showing the importance a leader can have in a team. In future projects, this is something I will be able to look out for and combat by trying to take this role upon myself if I notice that not a lot of progress has been made in a given week.

A learning opportunity I definitely missed during this project was learning how to actively involve the user in the design process. This was something I got to have experience with in past projects, like Project 1 for example, where I noticed its effectiveness towards developing the project. Though I intended trying to involve the user more this time in the design process because of that, we focused too much on developing a concept before doing this. Trying to overly develop a concept also hindered us from making a lot of low fidelity prototypes, which is also a primary ingredient for conducting user tests at an early stage. This might also be the reason why it was hard for us to find a context for our concept, since the moment we started giving feedback and comments from others, we also discovered a context for our product. This did however make me learn a lot about the design process itself, and how to better plan the design process in the future.

Last year I discovered that the core of my vision is using technology to bring people together for a more meaningful interaction. With this knowledge gained, I expected to use this project to design in relation to this vision. Furthermore, when I was younger, I wanted to become a fashion designer for several years. I expected this passion to be relived. Lastly, I expected to use this project to catch up on my Arduino programming, because I did not aquire the desired level of skills within this field in the previous year.

The most important thing I learned during this project and in this squad is my need for structure. The Crafting Everyday Soft Things field of design is very broad. The activities within the squad were also unstructured. This combination was something I had quite a lot of trouble with. The endless possibilities made it very hard for me to settle for an idea. I always felt like there was a better idea at the horizon, which I was on the brink of finding. Therefore, I kept postponing making a decision. Because of the absence of control from the squad itself, this effect was strengthened. I do not think that it is a problem that I need some kind of structure from people outside myself, since you would have strict deadlines and specific design briefs if you would work in a company or with a client as well, but it is important to keep in mind for myself that freelancing would therefore not be a good idea for me.

Something that made the decision making process ever harder for me, was the fact that I never had an idea that really spoke to me personally. I discovered that the project I'm working on must be something close to my heart. We definitely had some ideas which relate to my vision, but we could not envision these ideas and therefore we chose to design for entertainment. This is not something I wish to design for and I noticed that this reduced my motivation for the project. I do not regret the fact that we settled for this idea, because otherwise we would not have finished the prototype on time. It was also very fulfilling to see that everything came together in the end. Nevertheless, I stated for myself that I want to pay more attention to what I want to design for in the future. Taking more time to develop concepts which speak to me will make this more achievable, because I will be able to present and defend specific ideas.

A unique learning experience I had from this squad is the fact that I am too much of a thinker for this squad. I tend to explore ideas in my head instead of make them. In my previous projects this already surfaced, but during this project it became even more apparent. Once there is an idea, I have no problem with prototyping it, but it feels very unnatural to me to work from the perspective of making. I get unsecure when I make things, without a determined purpose. I design from the perspective of a vision or a goal and this is useful knowledge about my professional identity. Nevertheless, I feel like it is missed learning opportunity that I did not make more samples, worked more with material expression or experiented more with the machines in the Wearable Senses Lab, because I could have acquired very specific and useful skills.

Another missed learning opportunity was that I did not program a lot even though I wanted to. Because of the time pressure, I just helped with the programming. However, I would have liked to program something by myself to acquire the desired skills. Except for the time pressure, this was also caused by the fact that I did not speak up enough that I wanted to do the programming. I get insecure when I want to do things other people are better at. I already learned this last year and I have been working on it ever since, but I still have a long way to go.

Another thing I learned in this squad is the value of having a workbook. The visuals speak to the imagiation and inspire. Furthermore, the process was documented very well, which made it easier to reflect upon our choices. I think this precise documentation is the reason for how everything came together at the end. A workbook as was made during this project, is especially useful for this squad because of the possibility to stick samples in, but I am going to use one for my next project in another squad as well, because it has helped me a lot.

The most positive learning experience I had during this project was the collaboration with Summa. Industrial design students, myself included, generally just see how things will turn out and when problems occur they are solved in the moment. When you work together with other people who are only partly involved in your project you must be very precise in your communication to make sure everything will turn out the way you want it to. The first time we went to Summa, our ideas weren't specific enough. We learned that we had to make decisions to make the collaboration work. The Summa students were the reason we could make decisions and the next time we could give the students specific instructions. We met up every week, had a very good communication and this is visible in the result, which was exactly what we wanted. Furthermore, I learned to rely on the expertise of others. I have some knowledge about materials and sewing, but not as much as the Summa students. It was good to let go a little bit, because I tend to want to have all control.

To conclude, this project was especially a very useful learning experience to learn about myself as a designer and I am proud of everthing I discovered about myself.

During project 2, I expected to get more experience with working with different materials. This was also a goal of mine. Other goals for this project were to get more experience with using different techniques on materials and to keep developing my coding skills. These goals are very much in line with the CEST squad, which made me choose it.

In the CEST squad, it is intended to start making as much as possible. I struggled with this a lot, as I am more of a thinker than a doer. I noticed that I often caught myself brainstorming and thinking instead of making at the beginning of the project. I learned that making can be very helpful to get more knowledge about certain materials. With this knowledge, design decisions can be made more efficiently. However, I also learned that this design process approach does not fit me. I get stressed very fast when there is not a lot of structure. I learned that brainstorming at the beginning of the design process and start making further in the process is a better approach for me, as I am more of a thinker. However, as I also experienced positive effects of the making at the very beginning of the project, I would like to combine these two approaches in the future. Another important aspect I learned from the CEST squad is how useful a workbook can be. I enjoyed working with a workbook and I learned that it can be very useful, as it shows at a glance what has already been done. It helps to link back certain decisions and explorations with the current design development. Especially at the end of project 2, the workbook became very useful. It showed a pattern that was not seen before and it helped to remember what was done in the first weeks of the project. I also learned that by writing everything down in the workbook, you are unconsciously being pushed to think about the design choices. In future projects, I am going to keep track of a workbook again.

During the project, I especially focussed on the hardware and the software of the digital RGBW LED strips. It took me a while to understand how these digital strips work, but by trying out a lot and by looking at example codes I learned about how to code these strips. Conductive wire was used to make the connections. I learned that using conductive wire is very efficient if you want to incorporate electronics in clothing. While using the conductive thread for the first time, I learned that it is much more efficient to make a sketch of how to sew it beforehand. The conductive wires cannot touch each other when there are not going to the same pin, which makes it important to sort out beforehand where you want certain nodes to come together. I learned that the sketch made the whole more clear. In the future, when working with electronics in clothing, I want to keep using conductive thread.

During the second half of the project, we had a collaboration with the summa students. I learned that when having a collaboration, decisions have to be made faster in order to keep the summa students as informed as possible. This is very important for me, as I am not good at making choices fast enough. Also, I learned that having a meeting at least once per week is necessary to make clear what you want and what is expected. Furthermore, I learned that communication is extremely important to make sure everyone is on the same level of understanding. I would love to have another collaboration such as we had with the summa students in the future, as it was a positive experience which gave many learning opportunities.

To conclude, the CEST squad helped me to specify my vision. I learned which approaches do and do not fit me and I learned that working with a workbook is very efficient. I also developed my coding language skills and learned that collaboration involves a lot of decision making, which helps me make decisions faster and more efficient. A learning opportunity I missed is that I did not learn as much about working with different materials and with different techniques as much as I wanted. In the future, I am going to push myself to try out different techniques with different materials.