LTC7812 - Low IQ, Synchronous Boost+Buck Controller

Project Name:	Demo board DC2422A-A (Boost)
Date:	Jan. 2016
Designer:	

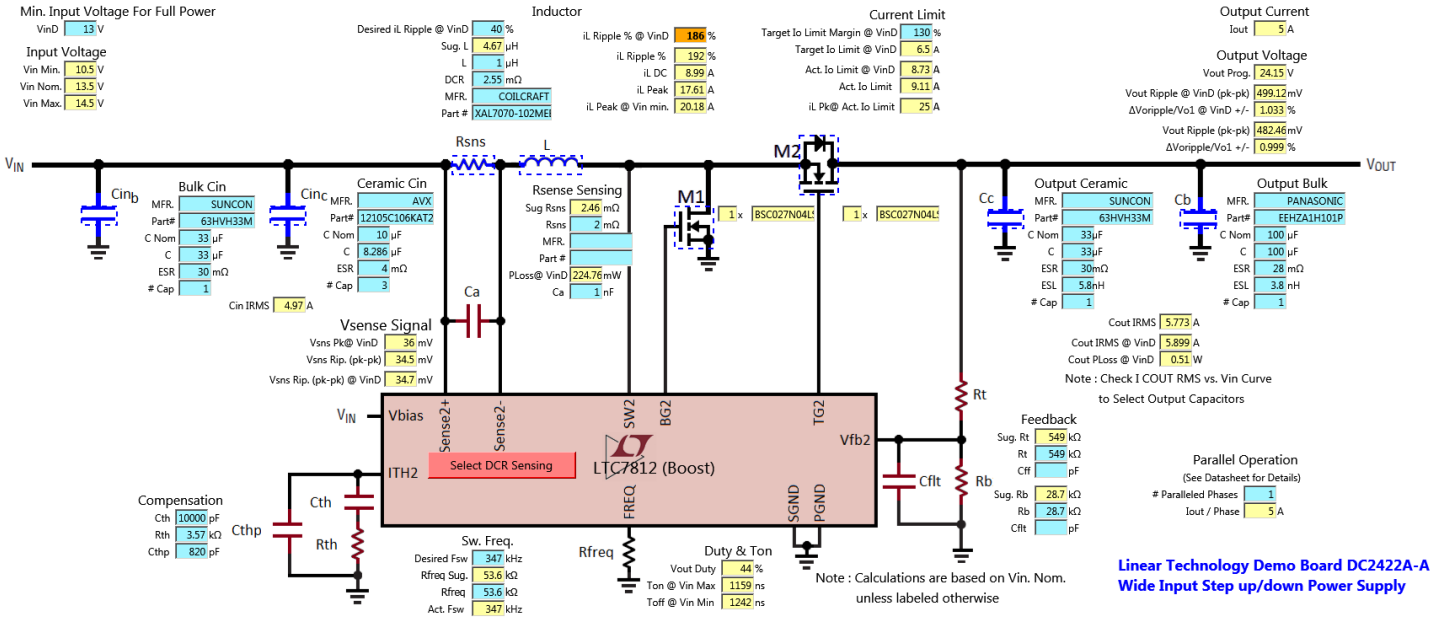

Linear Technology Demo Board DC2422A-A
Wide Input Step up/down Power Supply