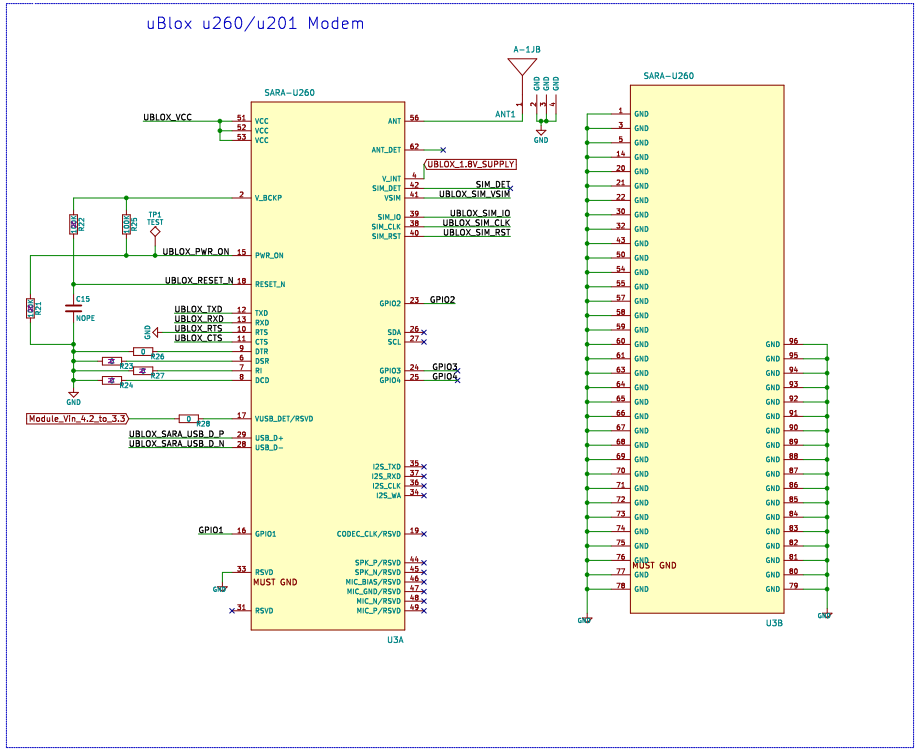

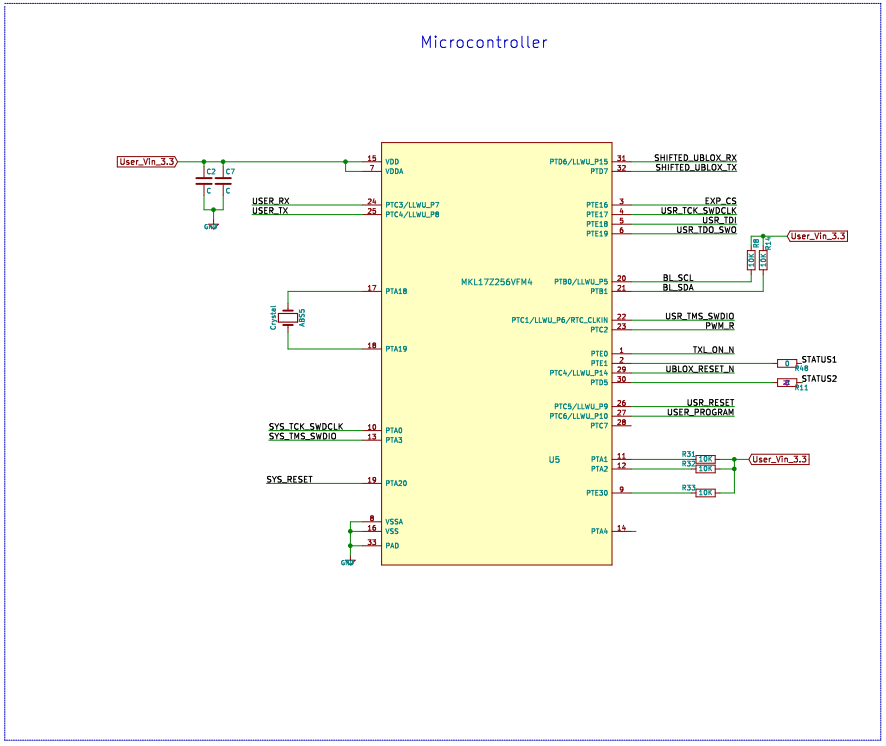

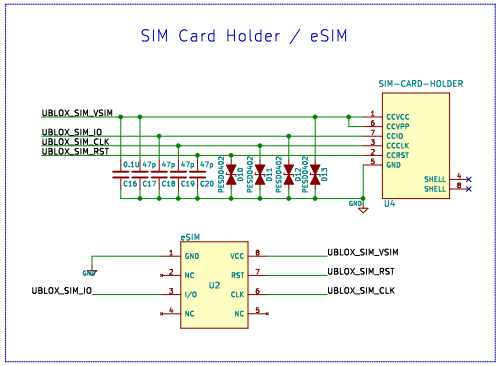

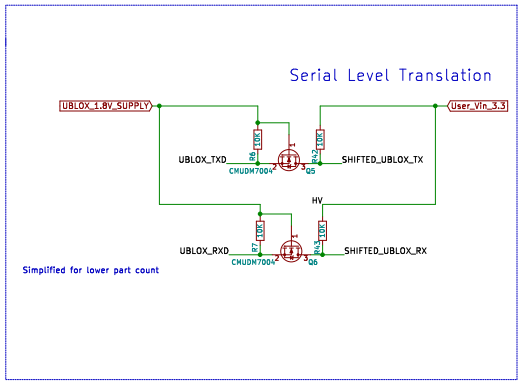

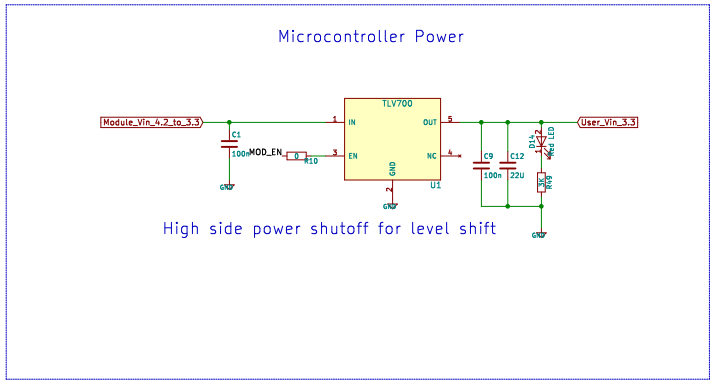

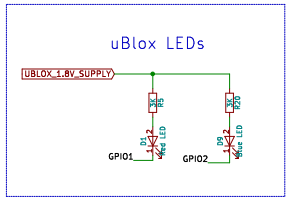

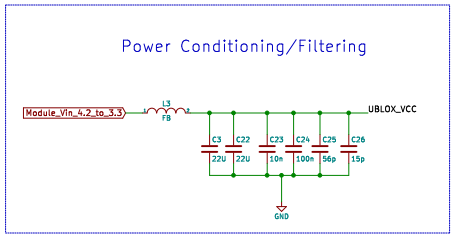

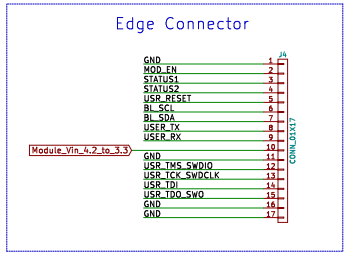

Sheet: /
File: minimus-prime.sch

Title: BeaglePhone Pocket

Size: C	Date: 2017-09-28	Rev:
KiCad E.D.A. kicad 4.0.6		Id: 1/1