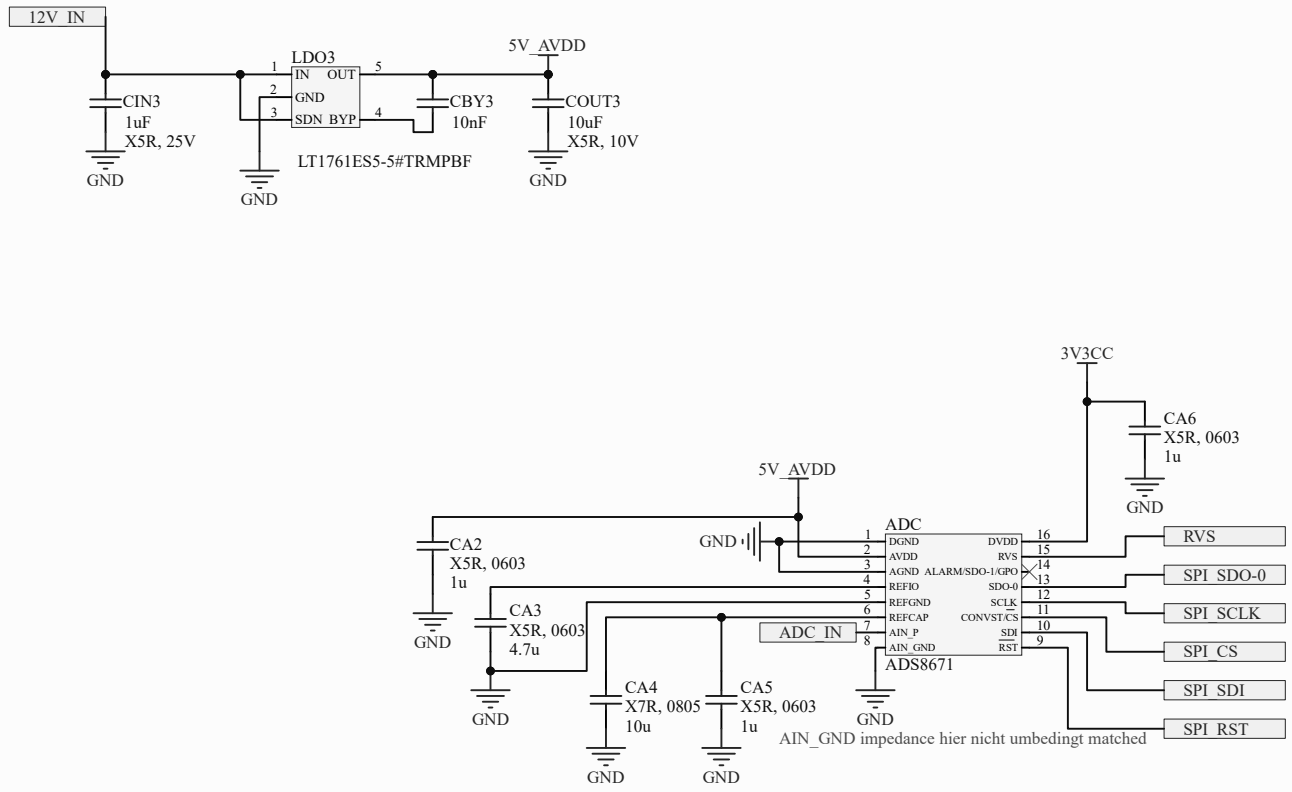

Title: OPG control unit, ADC		CHECKED 5-11-21
Size: A4	Number	Revision: 4
Date: 7.22.2022		Sheet of
File: C:\Users\..\ads8671.SchDoc		Drawn By: Christoph Wagner