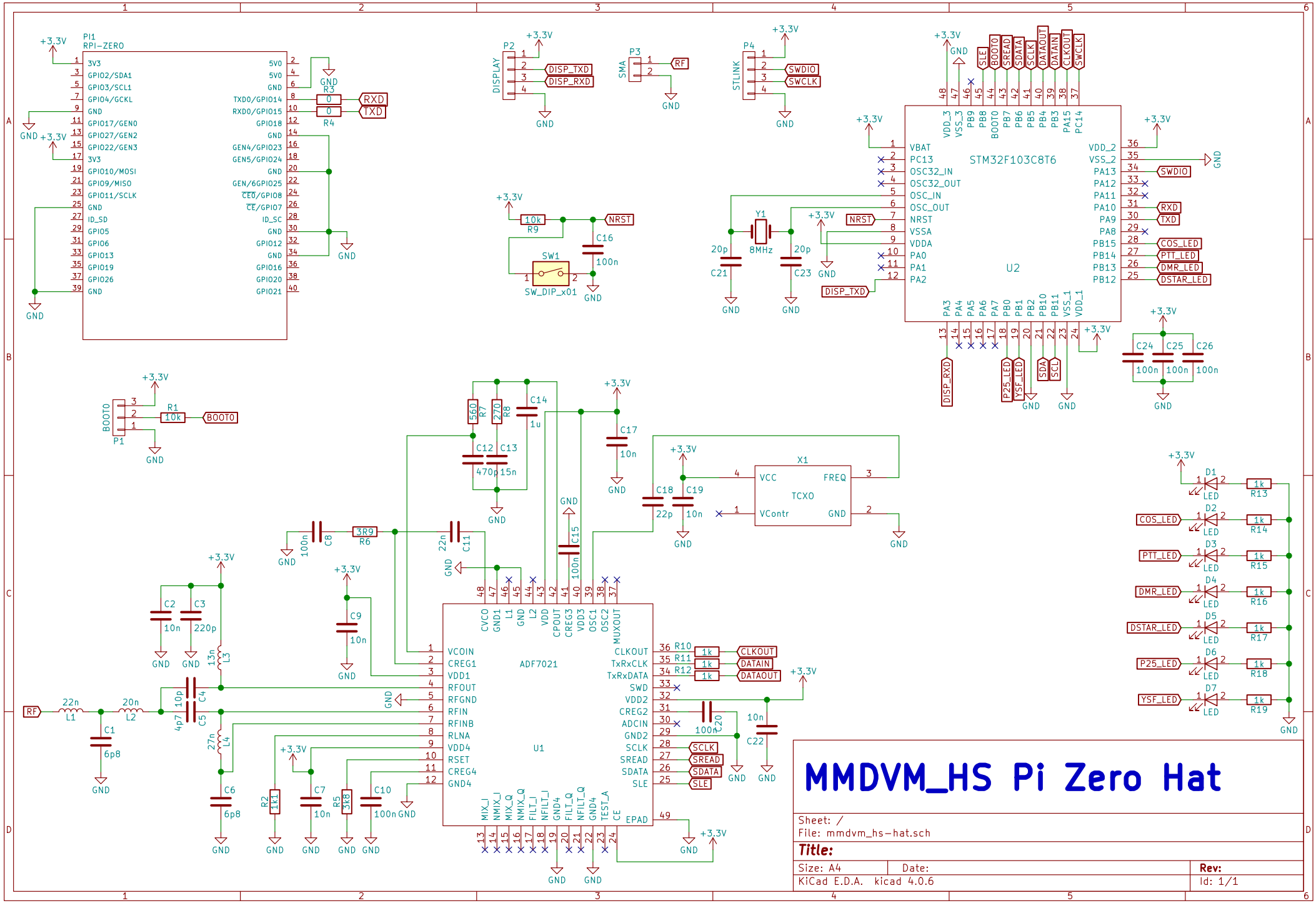
MMDVM_HS Pi Zero Hat
Sheet: /
File: mmdvm_hs-hat.sch
Title:
Size: A4
Date:
Rev:
KiCad E.D.A. kicad 4.0.6
Id: 1/1
PI1
RPI-ZERO
P2
DISPLAY
P3
SMA
P4
STLINK
U2
STM32F103C8T6
U1
ADF7021
X1
TCXO
P1
BOOT0
Y1
8MHz
SW1
SW_DIP_x01
RXD
TXD
DISP_TXD
DISP_RXD
RF
SWDIO
SWCLK
NRST
COS_LED
PTT_LED
DMR_LED
DSTAR_LED
P25_LED
YSF_LED
CLKOUT
DATAIN
DATAOUT
SCLK
SREAD
SDATA
SLE
SDA
SCL
+3.3V
GND