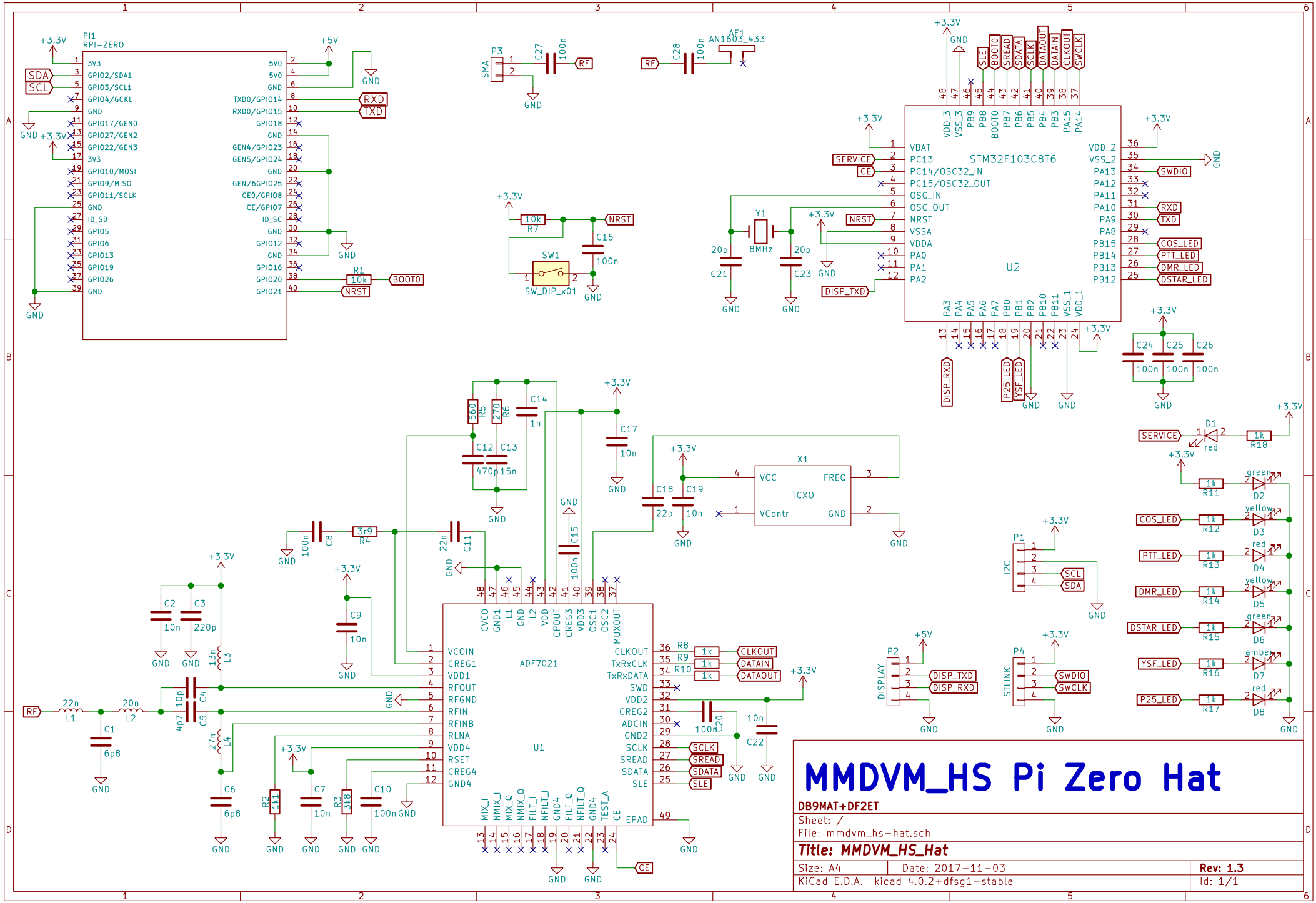
MMDVM_HS Pi Zero Hat
DB9MAT+DF2ET
Sheet: /
File: mmdvm_hs-hat.sch
Title: MMDVM_HS_Hat
Size: A4
Date: 2017-11-03
Rev: 1.3
KiCad E.D.A. kicad 4.0.2+dfsg1-stable
Id: 1/1
PI1
RPI-ZERO
U2
STM32F103C8T6
U1
ADF7021
X1
TCXO
AF1
AN1603_433
P1
I2C
P2
DISPLAY
P4
STLINK
SW1
SW_DIP_x01
Y1
8MHz
SERVICE
CE
NRST
DISP_TXD
DISP_RXD
SWDIO
SWCLK
RXD
TXD
COS_LED
PTT_LED
DMR_LED
DSTAR_LED
YSF_LED
P25_LED
CLKOUT
DATAIN
DATAOUT
SCLK
SREAD
SDATA
SLE
BOOT0
RF
SDA
SCL
+3.3V
+5V
GND