# Visual Studio Code and useful Tools

Copyright © 2025 Nordic Semiconductor. All rights reserved

# PC Development Tools Overview

nRF Util (nrfutil)

- Powerful Command Line tool
- nRF Util replaces *nRF Command Line Tools* and *nrfjprog*

nRF Connect for Desktop

- Cross-platform tool framework for development applications
- It contains apps for testing, monitor, measure, optimize and programm your applications

nRF Connect for VS Code

- Extension for *Visual Studio Code*
- Provides easier, user-friendly GUI to build and configure your projects

*Others*

RTOS Debugging:

- Percepio
- Segger SystemView

Debugger:

- Segger Ozone

IDE:

- IAR Systems

and more …

# nRF Connect for VS Code

## Tools included in the nRF Connect Extension pack

+

- VS Code IDE
- nRF Connect for VS Code
  - Develop, Build, Debug, and more

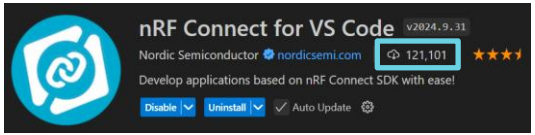


SDK

- nRF Util
  - Manages the repositories
  - Provides the SDK in one package

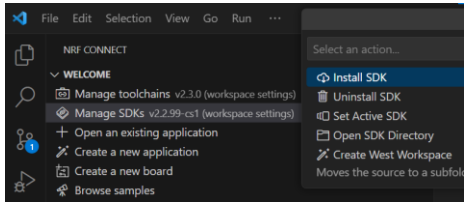


- Kconfig
  - Project config (west.yml)
- DeviceTree
  - Hardware config
- nRF Terminal
- Memory explorer
- Toolchain manager
- …

# *nrfutil* – Unified Command Line Utility

Further commands can be installed beside basic commands covered in nrfutil

<u>Examples for installable nrfutil commands</u>:

- Device
  - erase, program, verify, reset
  - readback protection, recover
  - memory read/write
- BLE-Sniffer
- MCU-Manager (serial transport only)
- SDK-Manager
  - nRF Connect SDK and toolchain installer

Command Prompt

```
C:\>nrfutil search
Command            Installed  Latest  Status
91                            0.5.0   Not installed
ble-sniffer        0.16.0     0.16.2  Upgradeable
completion                    1.5.0   Not installed
core               8.1.1      8.1.1   Installed
device             2.9.0      2.15.0  Upgradeable
mcu-manager                   0.7.0   Not installed
npm                           0.3.1   Not installed
nrf5sdk-tools                 1.1.0   Not installed
sdk-manager                   1.7.1   Not installed
suit                          0.9.0   Not installed
toolchain-manager  0.15.0     0.15.0  Installed
trace                         4.0.1   Not installed

Found 12 installable command(s)

C:\>
```

# nRF Connect for Desktop

Tools aimed at SW development and general use:

- QuickStart for guided setup and install
- Programmer is a great visual tool for flashing Nordic devices, updating modem FW on nRF91 Series
- Power Profiler used to optimize power consumption
- Board Configurator for Dev Kit settings
- Serial Terminal – Nordics Terminal program with some advantages
- SoC specific Tools – Bluetooth, Matter, Cellular IoT, PMICs

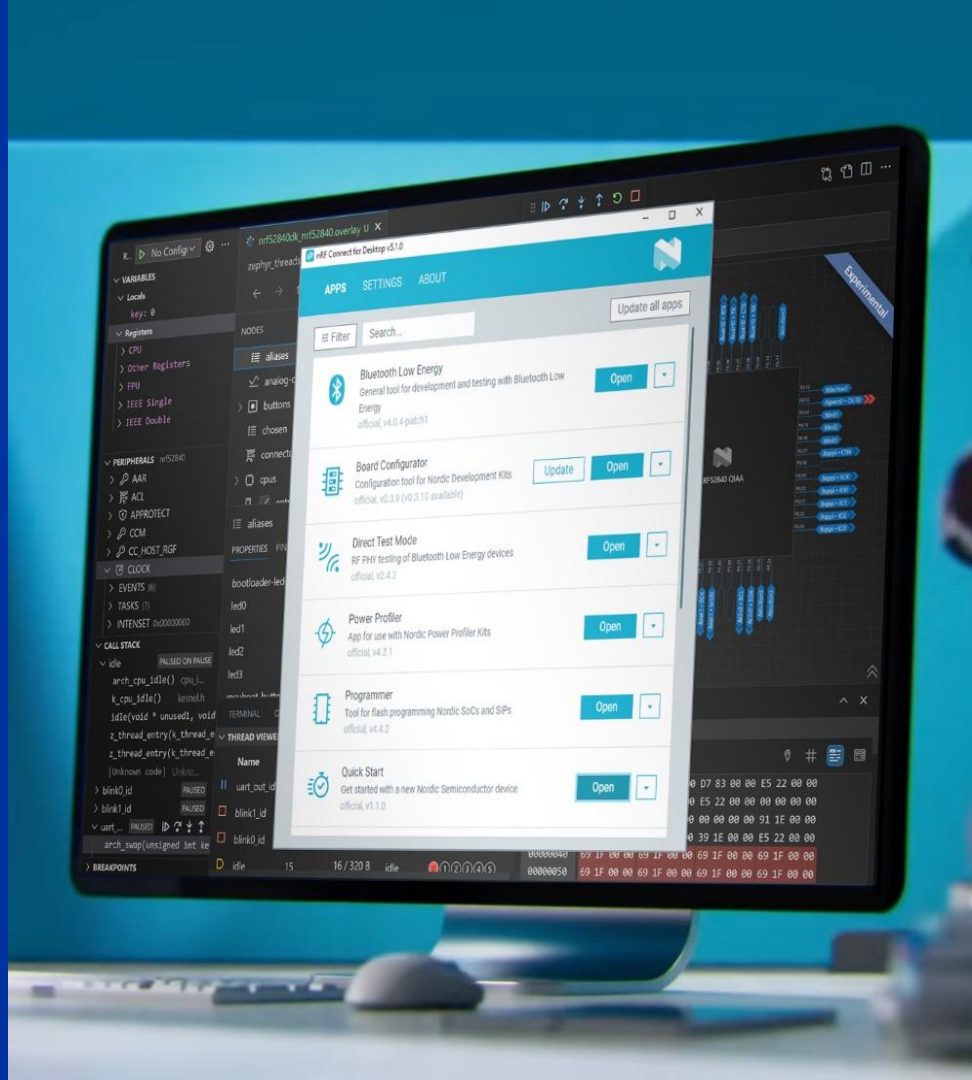

# Board Configurator

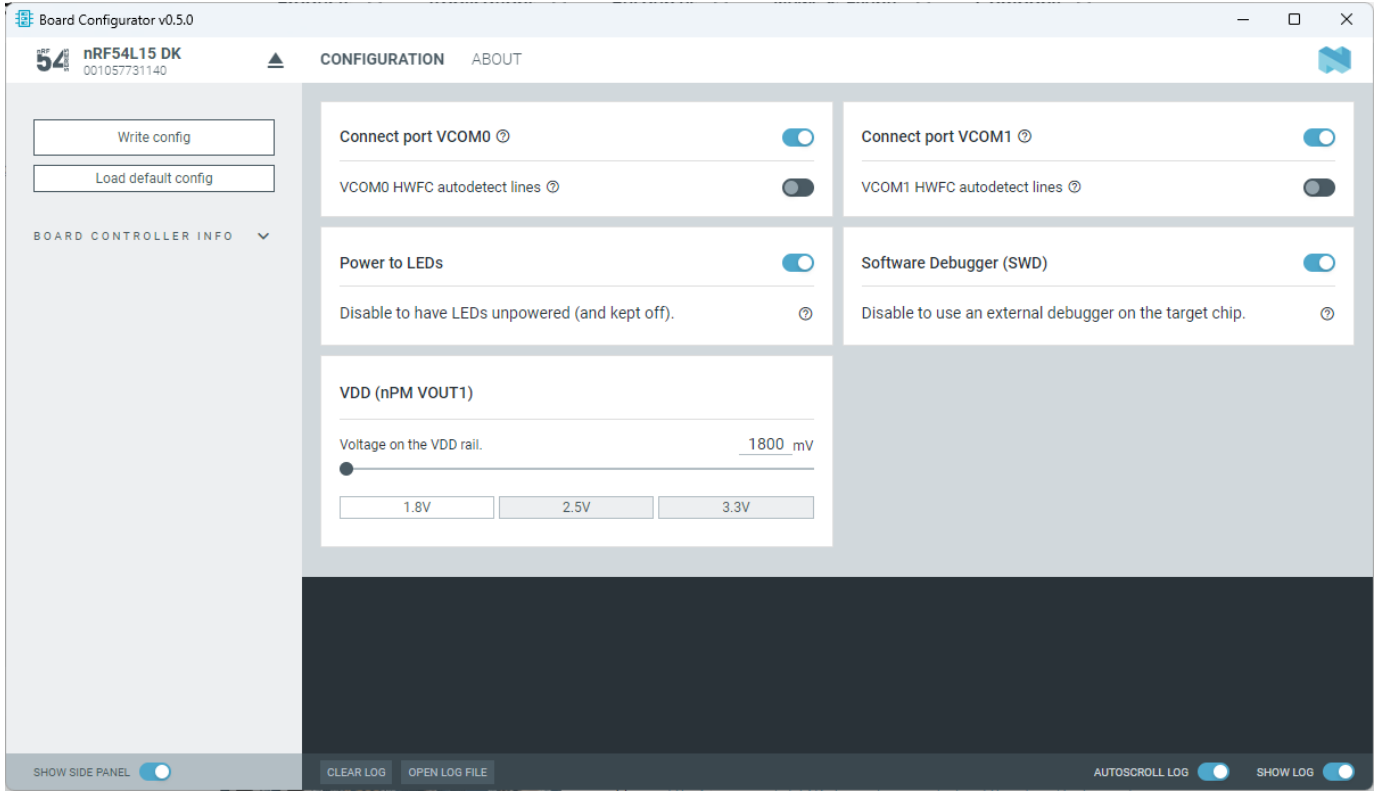

# Digital Control of nRF54L15DK Board Settings
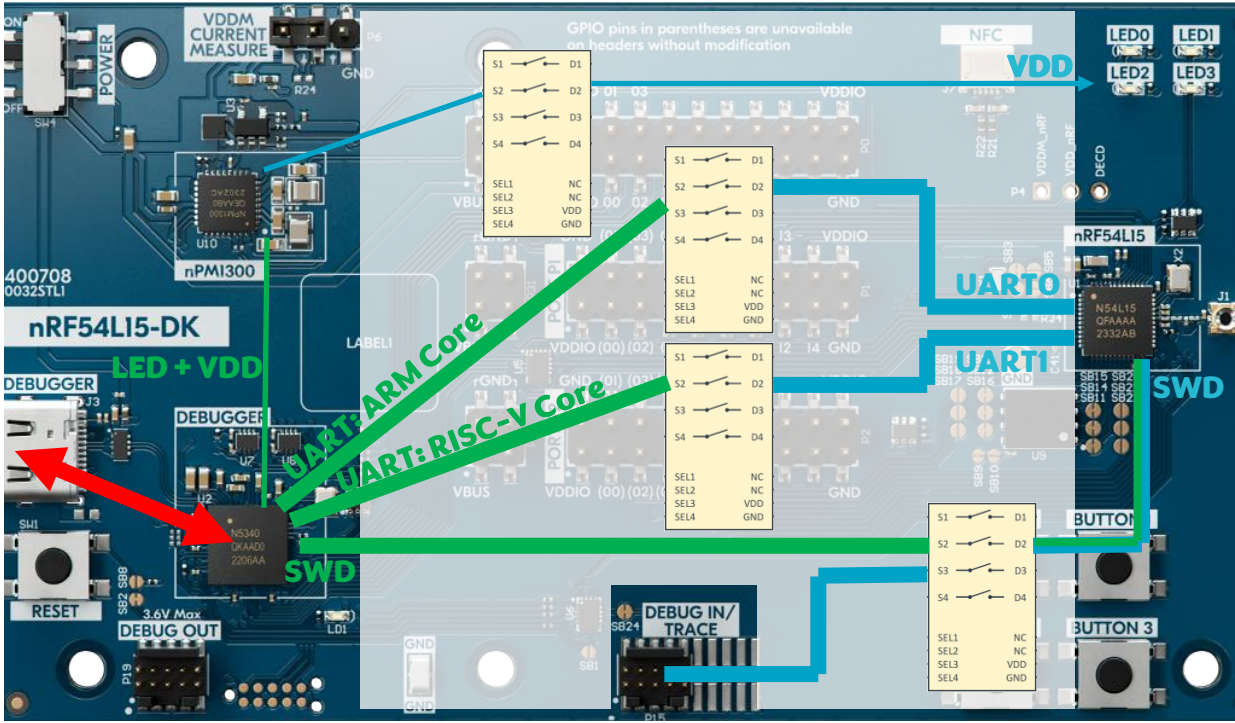
- VDD (nPM VOUT1)
  - VDD setting in 0.1 V steps (1.8 V to 3.3 V)
- Power to LEDs
- Connect port VCOM0 / Connect port VCOM1
  - Enable/disable UART Interface for Logging
- Software Debugger (SWD)
  - Debug on board or external debugger (DBG_IN)