Sequence alignment

Progressive multiple alignment and iterative refinement

Outline

- Progressive alignment
- Iterative refinement

Tree-based progressive alignments

- Key heuristics:
  - Construct a multiple alignment through a series of pairwise alignments
  - Align the “most similar” sequences first
- Align sequences according to a guide tree
  - leaves represent sequences
  - internal nodes represent alignments
- Determine alignments from bottom of tree upward
  - return multiple alignment represented at the root of the tree

Tree-based progressive alignment

- Depending on the internal node in the tree, we may have to align a
  - a sequence with a sequence
  - a sequence with a partial alignment
  - a partial alignment with a partial alignment
- In all cases we use the same basic pairwise alignment algorithm, but will modify the the scoring system
  - For sequence with a sequence, we use the standard scoring system for pairwise alignments
  - For aligning alignments or a sequence to an alignment, we use sum of pairs scoring

Tree alignment example

- Starting sequences

x^1 **TGTTAAC**
x^2 **TGTAAC**
x^3 **TGTAC**
x^4 **ATGTC**
x^5 **ATGTGGC**

- Create a guide tree
  - Using pairwise distances (we will cover this in subsequent lectures)
  - Approach similar to but simpler than phylogenetic trees

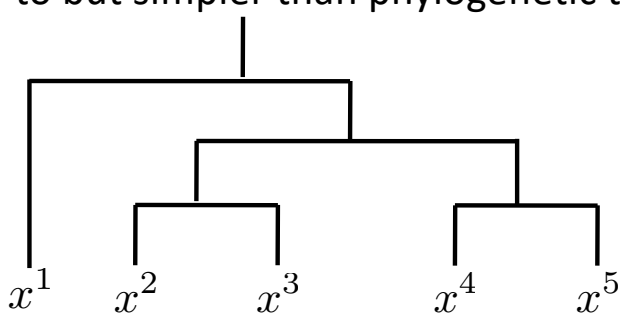

Tree Alignment Example

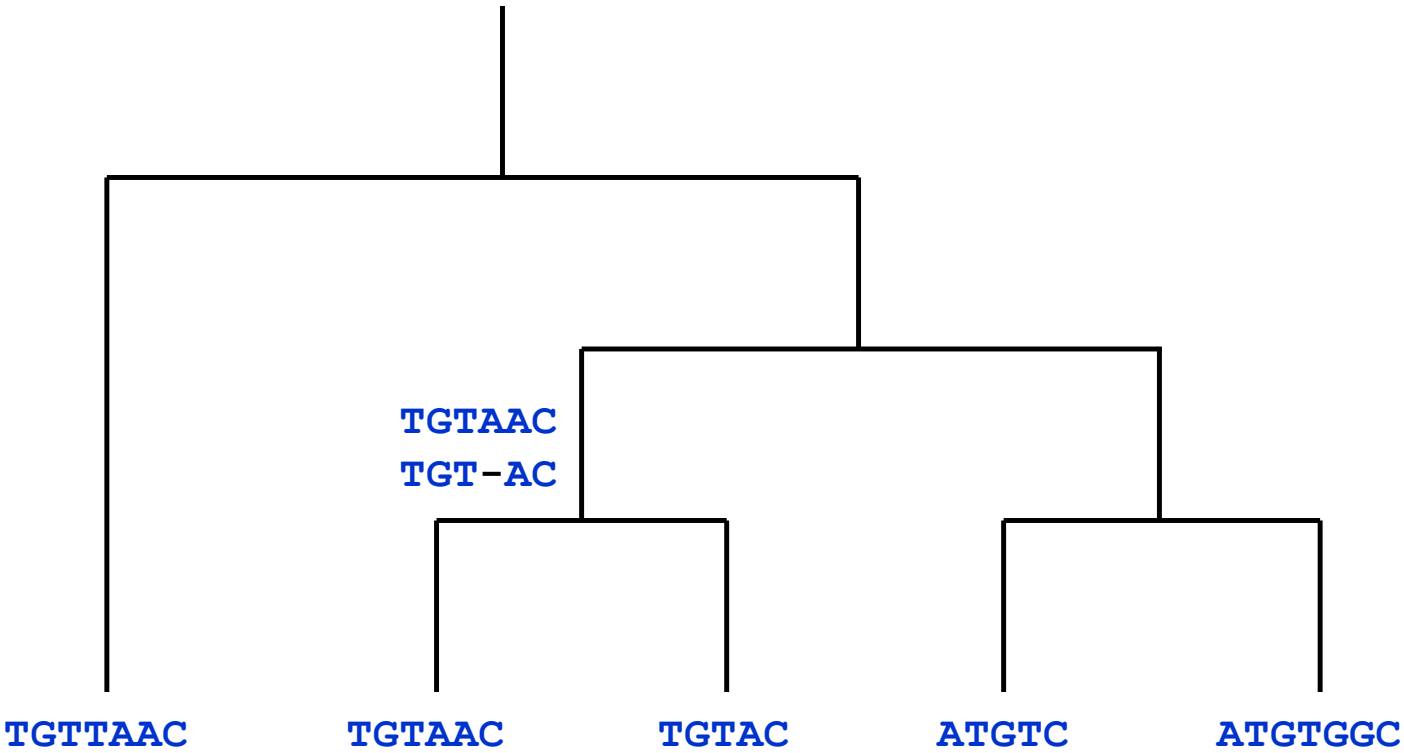

Tree Alignment Example

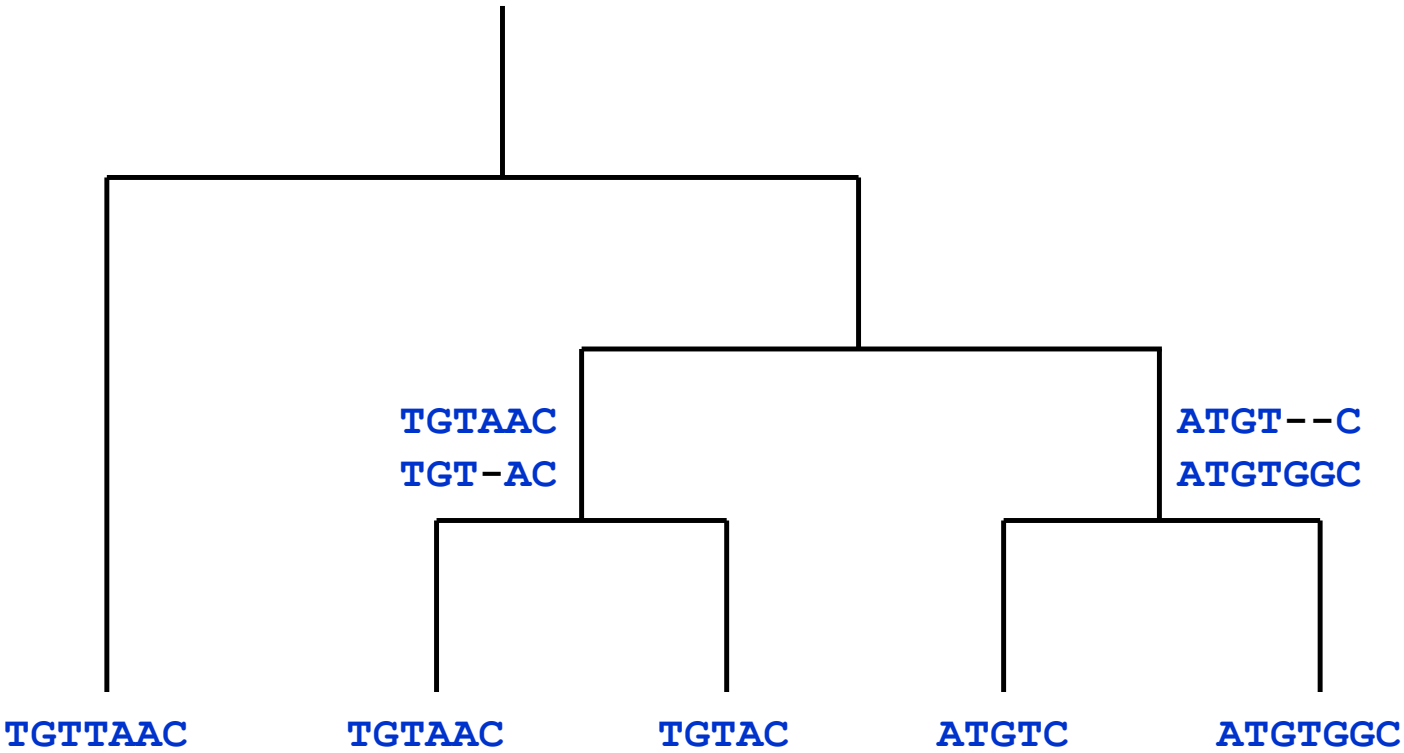

Tree Alignment Example

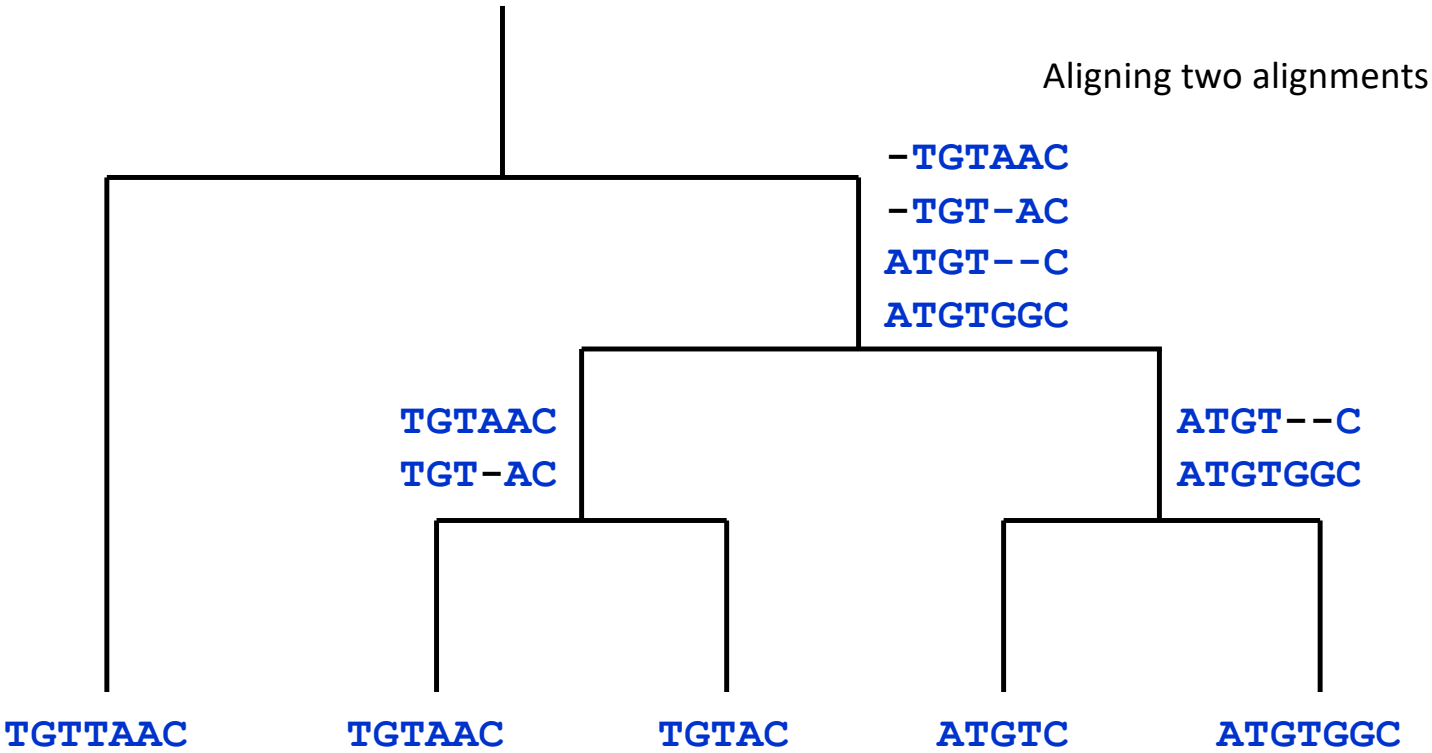

Tree Alignment Example

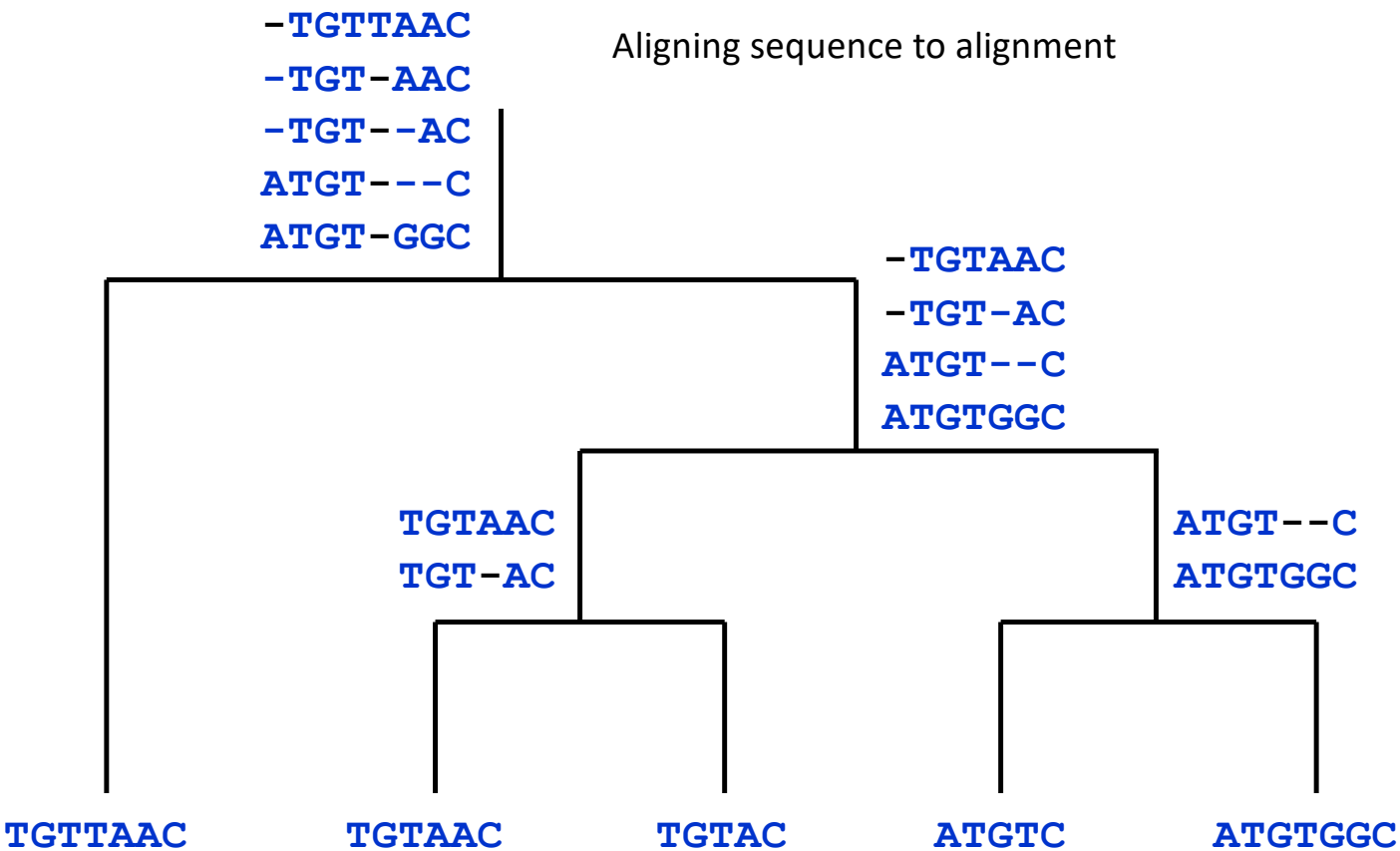

Scoring an alignment of partial alignments

- Recall the sum of pairs score for a column i

$$S(m_i) = \sum_{k<l} s(m_i^k, m_i^l)$$

- Let 1 to n represent sequences from the first alignment
- Let $n+1$ to N represent sequences from the second alignment, N denotes total number of sequences
- Alignment at column i can be written as

$$S(m_i) = \sum_{k<l\leq n} s(m_i^k, m_i^l) \quad \textbf{Within first alignment}$$

$$+ \sum_{n<k<l\leq N} s(m_i^k, m_i^l) \quad \textbf{Within second alignment}$$

$$\sum_{k\leq n, n<l\leq N} s(m_i^k, m_i^l) \quad \textbf{Between two alignments}$$

Aligning two alignments

- Assume we have two alignments corresponding to intermediate nodes of the guide tree

Alignment A1	Alignment A2
AAAC	AGC
-GAC	ACC

- Alignment of two alignments = pairwise alignment of sequences of *columns*
- Filling entry *(i, j)* of the DP matrix we maximize over
  - aligning column i in A1 to a column j in A2
  - aligning column i in A1 to gaps in A2
  - aligning column j in A2 to gaps in A1

Comments about tree-based progressive alignment

- Exploits partial alignment information
- But, greedy
  - The tree might not be correct, that is, reflect an incorrect ordering of how sequences should be stacked up in the alignment
  - Final results prone to errors in alignment
    - Some positions might be misaligned (that is have a lower score than if a different ordering is used).

Ordering matters

Consider aligning GG, DGG and DGD

1	2
D G D	D G D
- G G	G G -

Are as good. But when we include DGG

1	2
D G D	D G D
- G G	G G -
D G G	D G G

1 is better than 2, assuming a match score of 2, mismatch score =1, gap penalty=-2

Iterative refinement

- The order of selection of sequences can influence the alignment
- How to avoid committing to a non-optimal pairwise decision?
  - Revisit alignments
- Basic iterative refinement algorithm
  - Remove a sequence from the current multiple alignment
  - Realign the removed sequence back to the multiple alignment
  - Repeat until removal and realignment of any sequence does not improve the alignment score

The ClustalW algorithm

- A famous progressive alignment method: the CLUSTALW algorithm [Thompson et al. 1994]
- Tailored to handle very divergent sequences: 25-30% similarity
- Dynamically varies the gap penalties in a position and residue specific manner
- Weight different sequences differently
  - Closely related sequences need to be down-weighted
  - Divergent sequences are up-weighted
- Dynamically switch between substitution matrices depending upon the average similarity between sequences being aligned

Applying ClustalW to SH3 domain proteins

Alignment blocks correspond to beta strand secondary structures

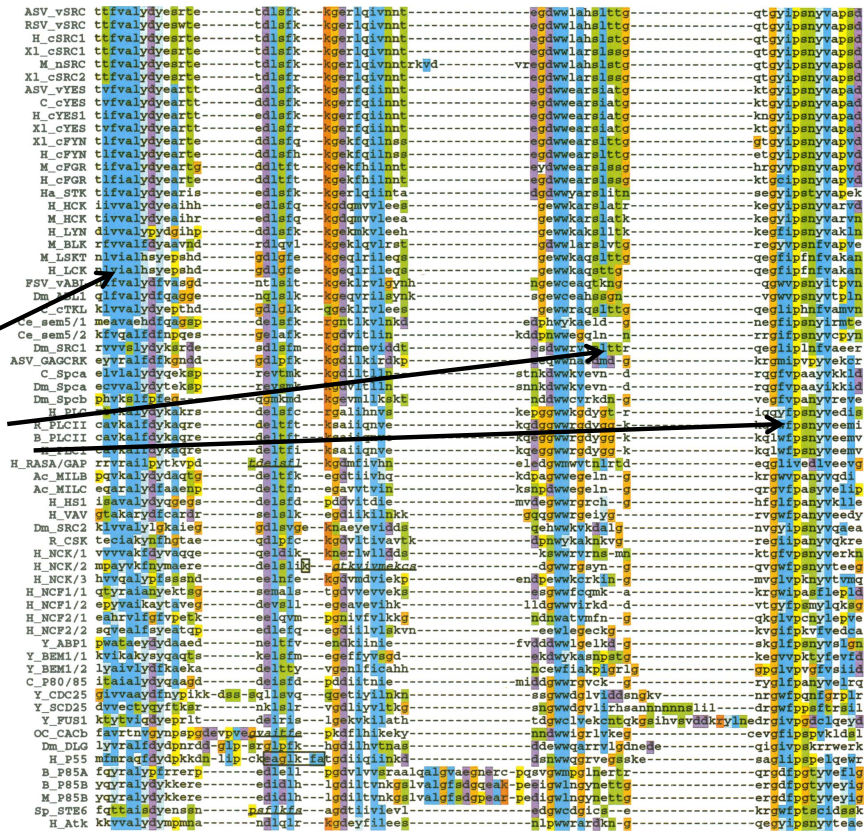

Proteins share <12% sequence identity

Thomson et al, 1994

Summary

- Tree-based progressive alignment
  - Employs a guide tree to determine an order of pairwise alignments leading to a multiple alignment
  - Uses alignments of pairs of partial alignments
  - Is greedy in terms of fixing partial alignments lower in the tree
- Iterative refinement
  - Allows for the realignment of individual sequences within a multiple alignment
  - Can compensate for greedy multiple sequence alignment approaches
- ClustalW is a prime example of a tree-based progressive alignment method that also uses iterative refinement.