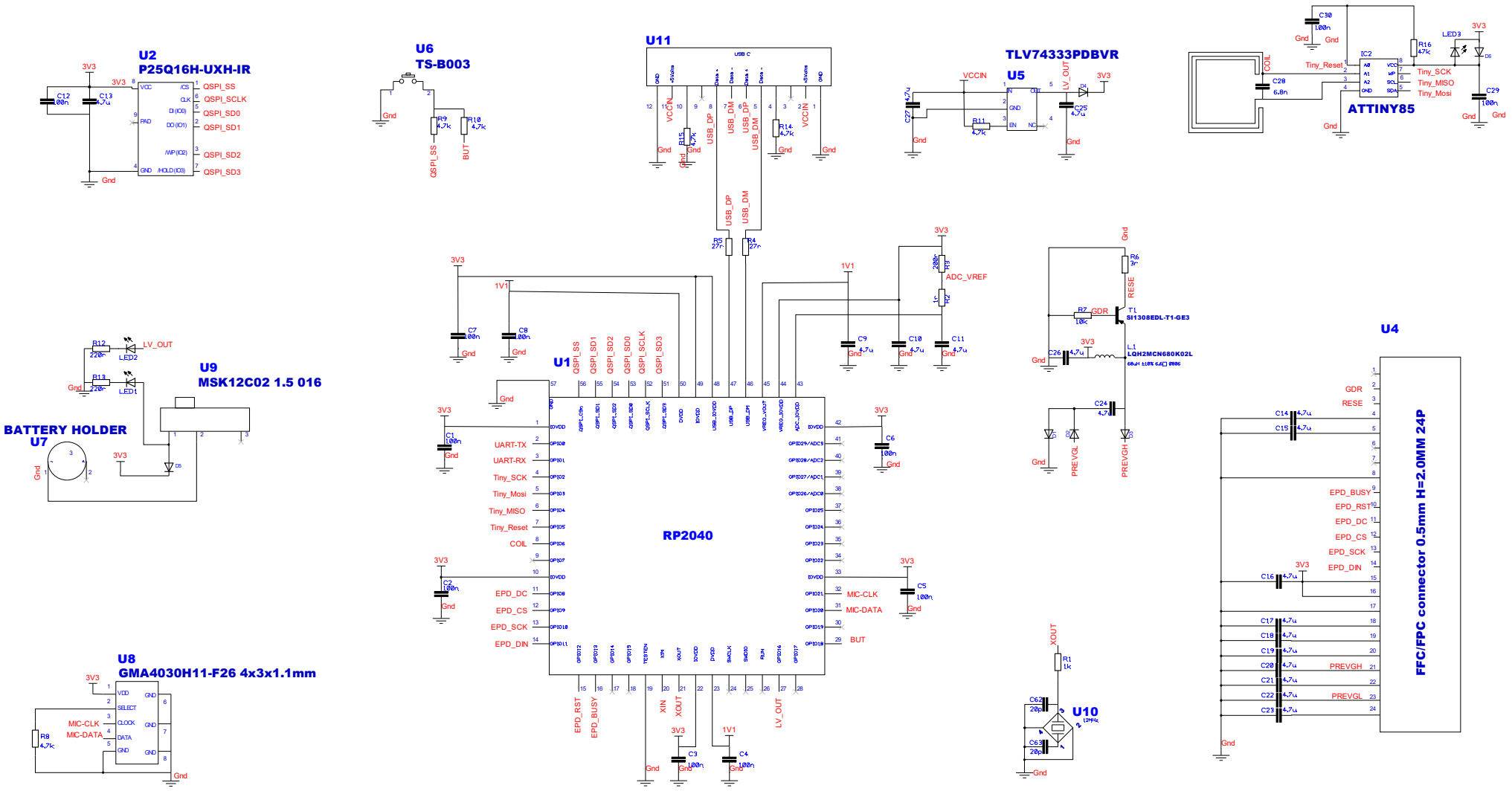

COMPANY NAME:		
DESIGN TITLE: ggtag		
PAGE: Page1	DRAWING NO.	REVISION:
SCALE:	SIZE: A	SHEET 1 OF 1
AUTHOR:	LAST SAVED: 22-05-2023	
CHECKED:	DATE:	
ISSUED:	DATE:	