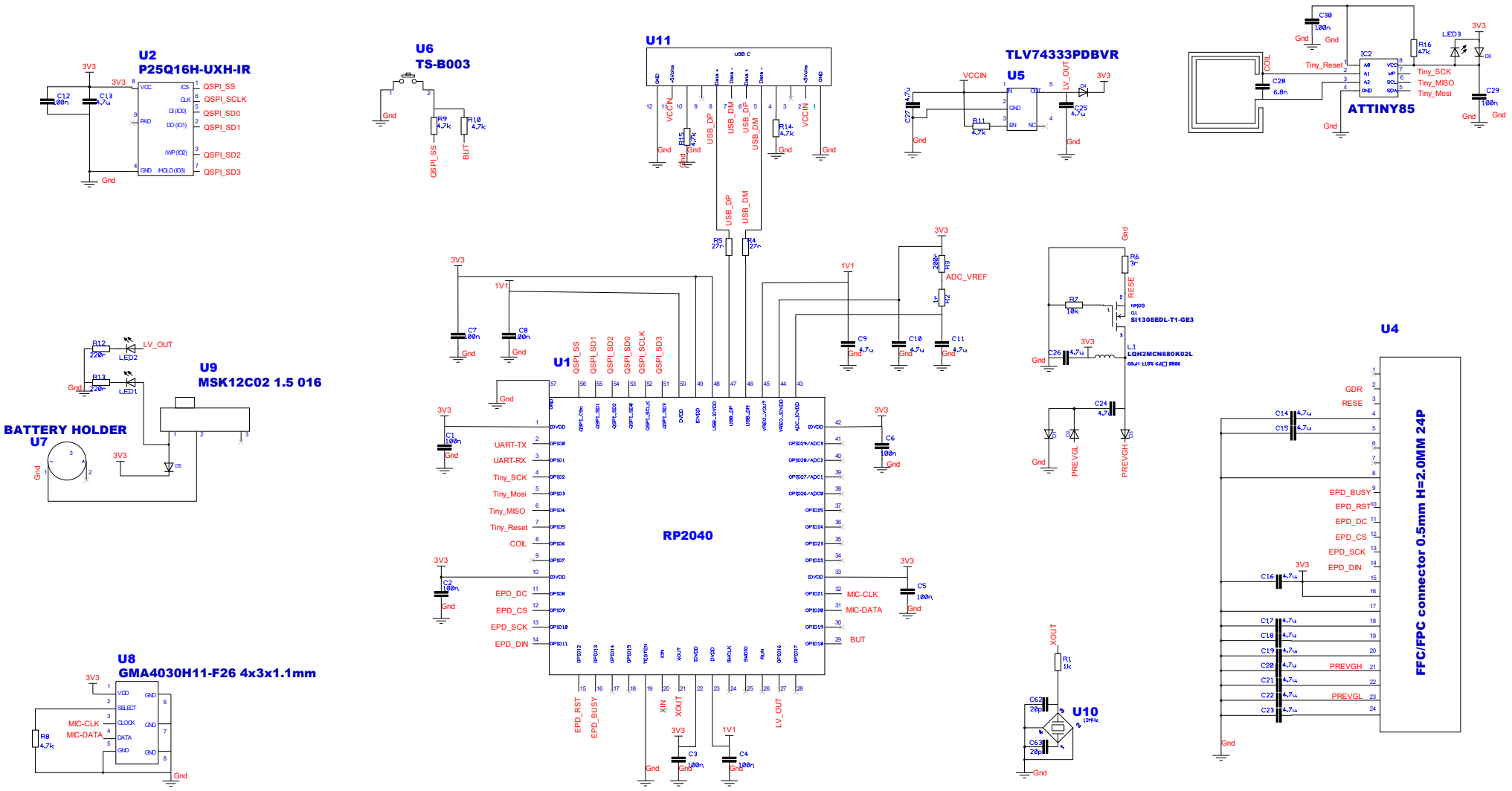

COMPANY NAME:			
DESIGN TITLE: ggtag			
PAGE: Page1		DRAWING NO.	REVISION:
SCALE:	SIZE: A	SHEET 1 OF 1	
AUTHOR:	LAST SAVED: 17-07-2023		
CHECKED:	DATE:		
ISSUED:	DATE:		