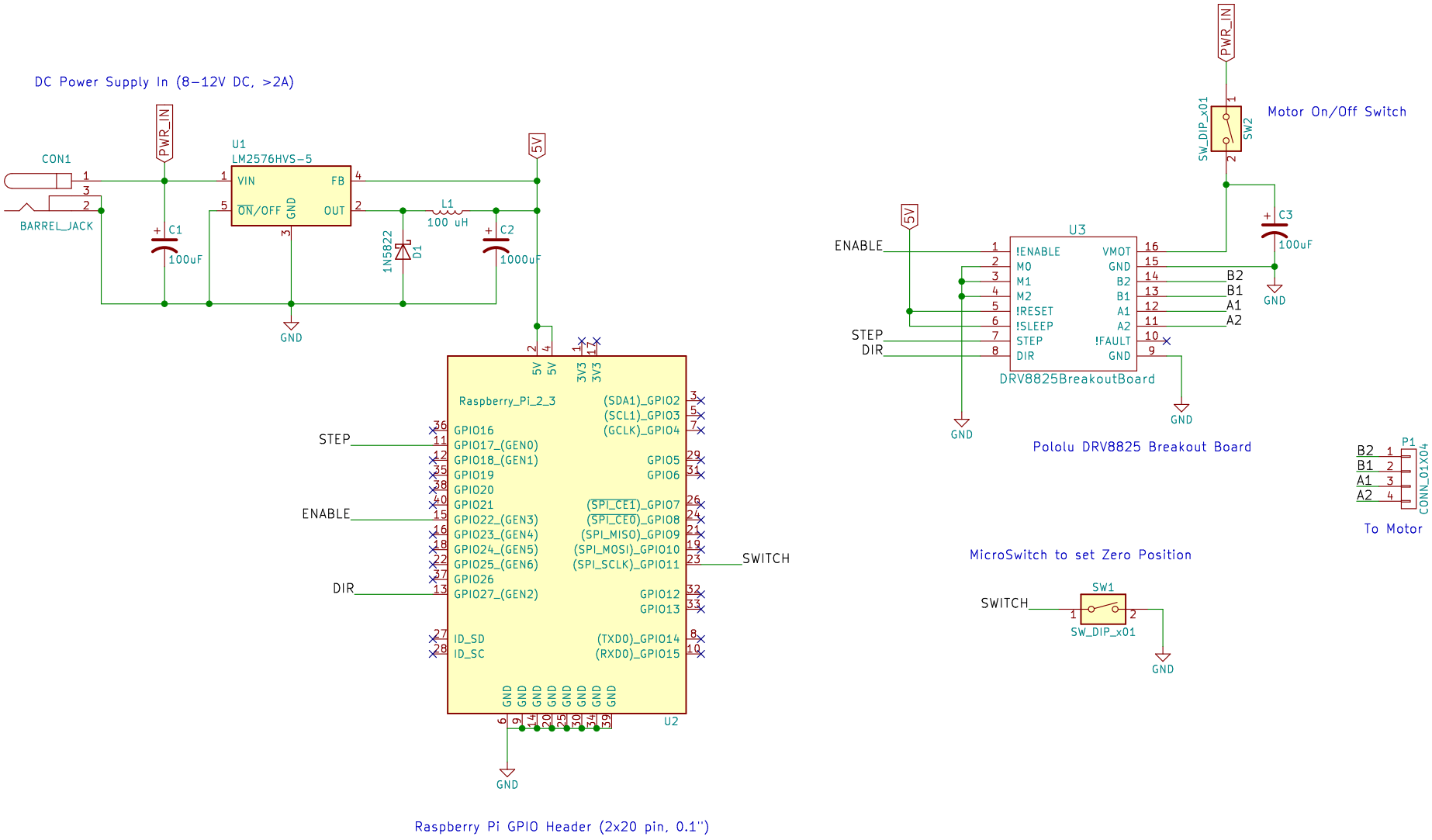

James Keaveney, 2017

Sheet: /

File: RPi_BeamProfiler.sch

Title: Raspberry Pi Beam Profiler – Electronics Schematic

Size: A4	Date:	**Rev:**
KiCad E.D.A. kicad 4.0.5		Id: 1/1