CAMERA TRACKING SYSTEM (RAT TRAK)

Team 2

Christopher Pullen - Mechanical Engineer
Darshan Patel - Mechanical Engineer
Ryan Loc - Mechanical Engineer
Fernanda Gutierrez - Bioengineer
Andrew Spence - Advisor
Hamid Heravi - Instructor

01 **INTRODUCTION**
Background, Needs Statement, Problem

02 **DESIGN CRITERIA**
Negotiables Vs. Non-negotiables

03 **ENGINEERING DESIGN PROCESS**
Design Process, Solution Considerations, Finalizing The Design

04 **TESTING METHODS & RESULTS**
Prototype Testing, Analysis of Results, and Goal Validation

05 **COST ANALYSIS**
Budget Analysis and Cost Breakdown

06 **IMPLICATIONS & NEXT STEPS**
Success Implications, Further Applications and Next Steps

BACKGROUND

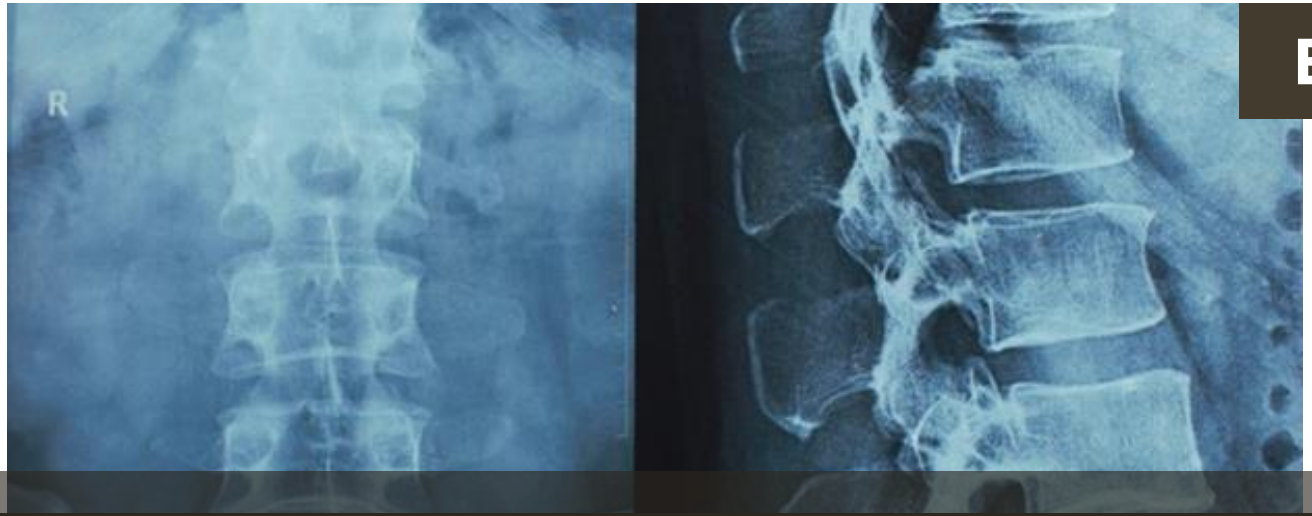

LEGGED LOCOMOTION RESEARCH

Insights applicable to medicine, prosthetics and rehabilitation therapies

SPINAL CORD INJURY RECOVERY

How the nervous system controls movement and treatment for neurological disorders

COMPLEXITY OF LOCOMOTION

Requires large data sets from freely moving animals to test treatments and hypotheses

PROBLEM

- Find a way to get zoomed in video of fast-moving rats over many continuous strides
- Previous solutions only capture one or two strides as animal goes past, or require many cameras and stitching of different views
- Develop a new closed-loop system that puts the camera on a gantry and keeps it focused on the animal, enabling large data sets of the animal at all speeds, accelerating, decelerating

CURRENT TOOLS

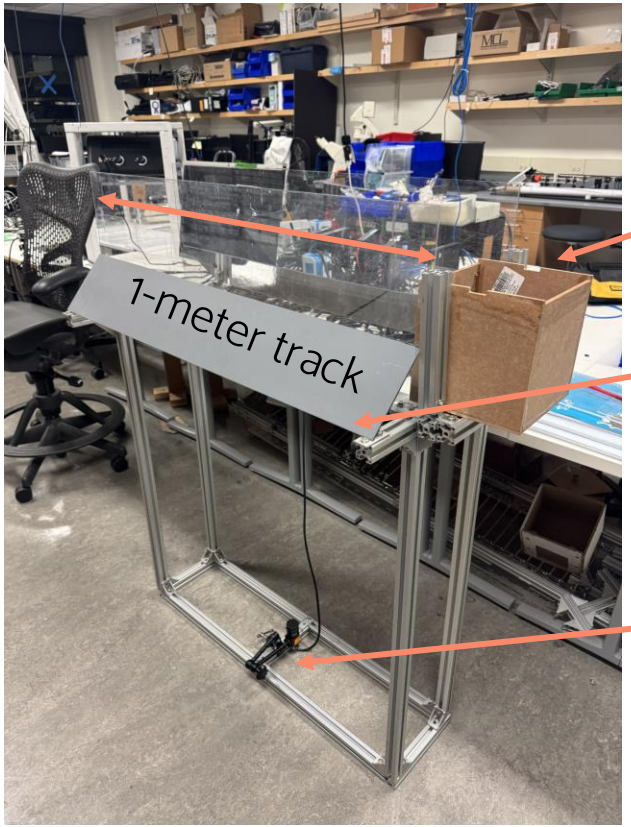

Entry box

Mirrors for side profile angles

Camera

Lighting

High speed camera

Tracking camera

Treadmill with acrylic cage

NEEDS STATEMENT

There is a need for developing an improved closed-loop system for the study of rat locomotion to provide more accurate analyses of the animals' gait and stride. These insights are applicable to the medical field and the ongoing research of spinal cord injury recovery.

DESIGN CRITERIA

	REQUIREMENT	METRIC	TARGET VALUE	JUSTIFICATION
NON-NEGOTIABLE	Video quality	FPS	250	Client
	Camera speed	m/s	1	Client
	Camera acceleration	m/s2	1	Client
	Track length	m	>3	Client
	Communication interface	-	ROS	Client
NEGOTIABLE	Modular design	Yes/No	Yes	Client
	Angles of footage	# (views)	3 (bottom, left/right)	Client

PREVIOUS SOLUTIONS

IN LITERATURE OR THE LAB

Stationary camera

Limited track space

Poor data quality

Limited research potential

Pan-tilt camera

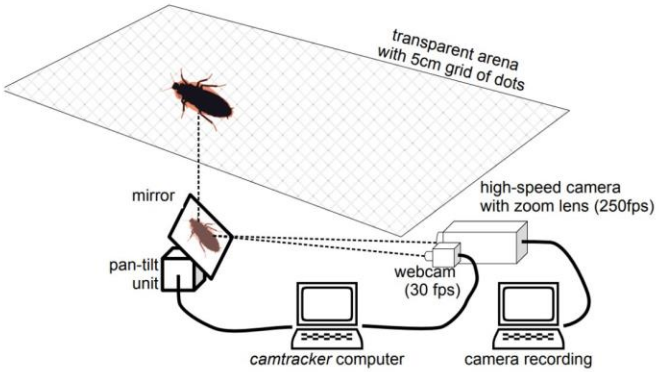

Complicated image algorithms

Limited to one angle

Data intensive process

Multiple cameras

Not cost-effective

Data intensive

Time consuming post-processing

Engineering Design Process

SUB-ASSEMBLIES

Track and frame → Transparent acrylic track with mirrors (multiple angles) and metal frame for support

Motion system → Linear motion system to enable camera movement below the track

Camera tracking → ROS for communication and OpenCV for object detection and centering in camera

POTENTIAL SOLUTIONS & DESIGNS

FRAME

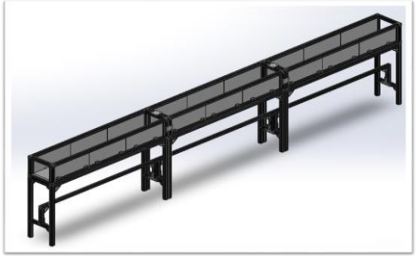

Aluminum extrusion

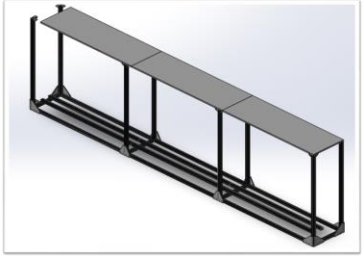

Aluminum extrusion

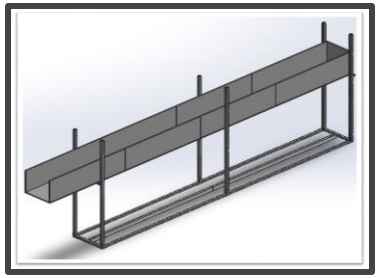

Versaframe stock

MOTION SYSTEM

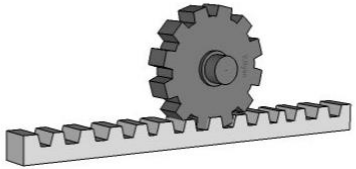

Linear rail with rack and pinion

Linear rod with steel wire

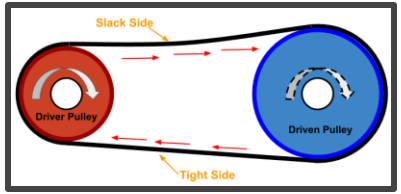

Timing belt with motor pulley

***Note these costs are estimated**

		Motion System		
		Linear rail/ crank slider	Linear rod/ steel wire	Timing belt and Pulley
Frame and Track	Aluminum extrusion v1	$3,800 Most stable/robust Slow speed	$4,400 Precise/durable Wiring complexities	$2,500 Easiest to repair Highest part count
	Aluminum extrusion v2	$2,700 Multiple angles Unstable	$3,200 Most modular Unstable	$1,300 Multiple angles Most unstable
	Versaframe stock	$2,500 Adaptable design Single angle	$3,100 Precise movement Wiring complexities	$1,200 Most adaptable design High part count

CHOSEN DESIGN

- Utilizes VersaFrame stock for the outer frame and track support
- Features side mirrors to capture 3 angles of footage
- Employs a timing belt pulley system for precise motion control

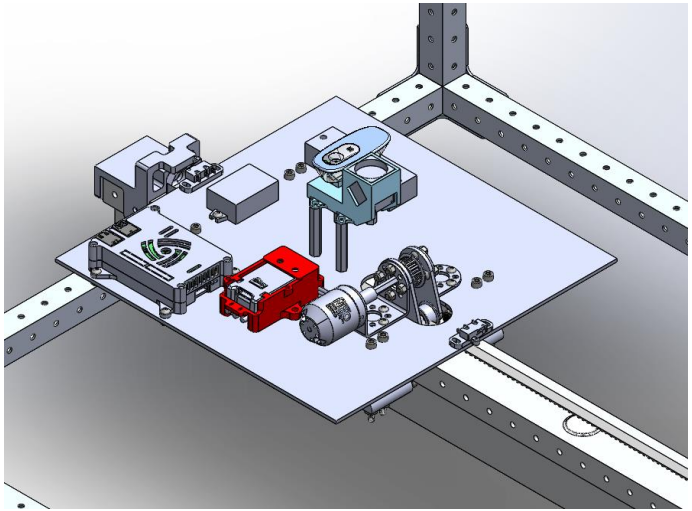

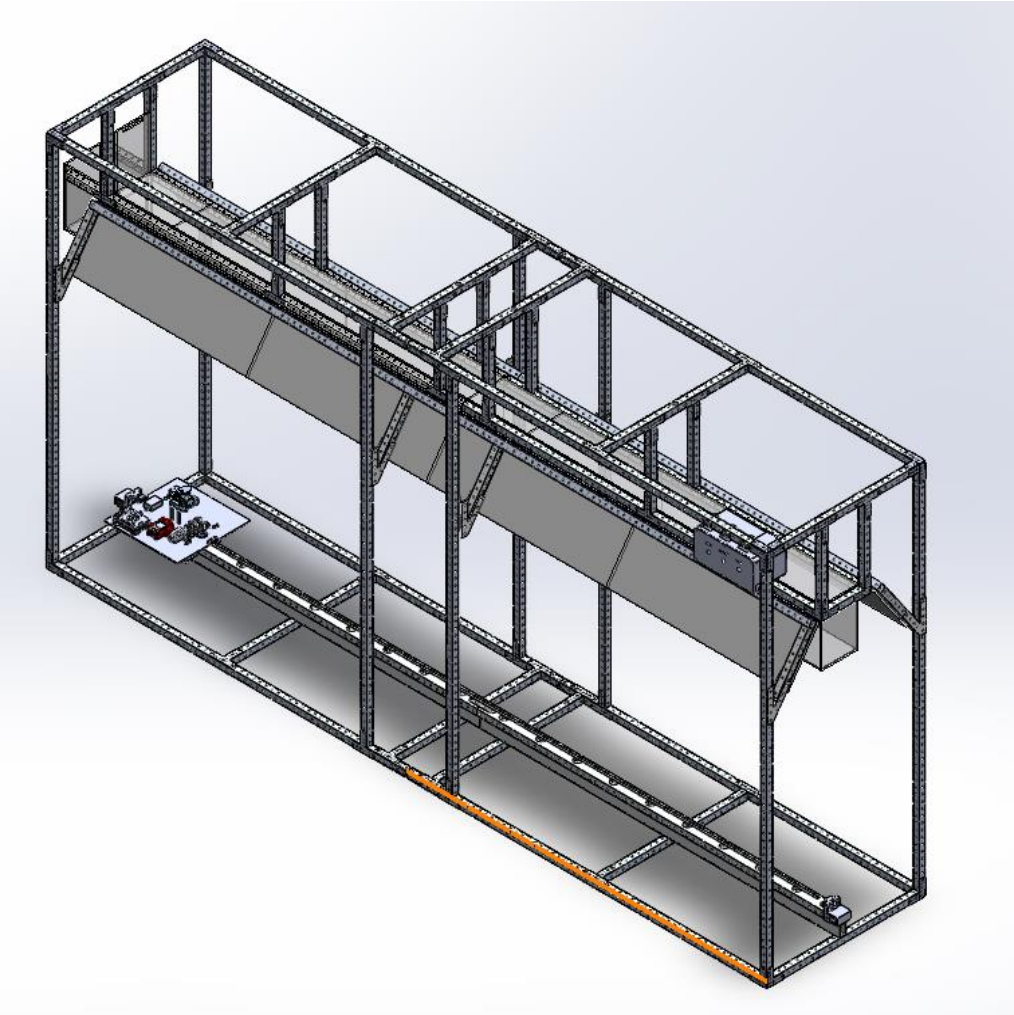

ELECTRONICS & WIRING

FINAL DESIGN

System Block Diagram 12V

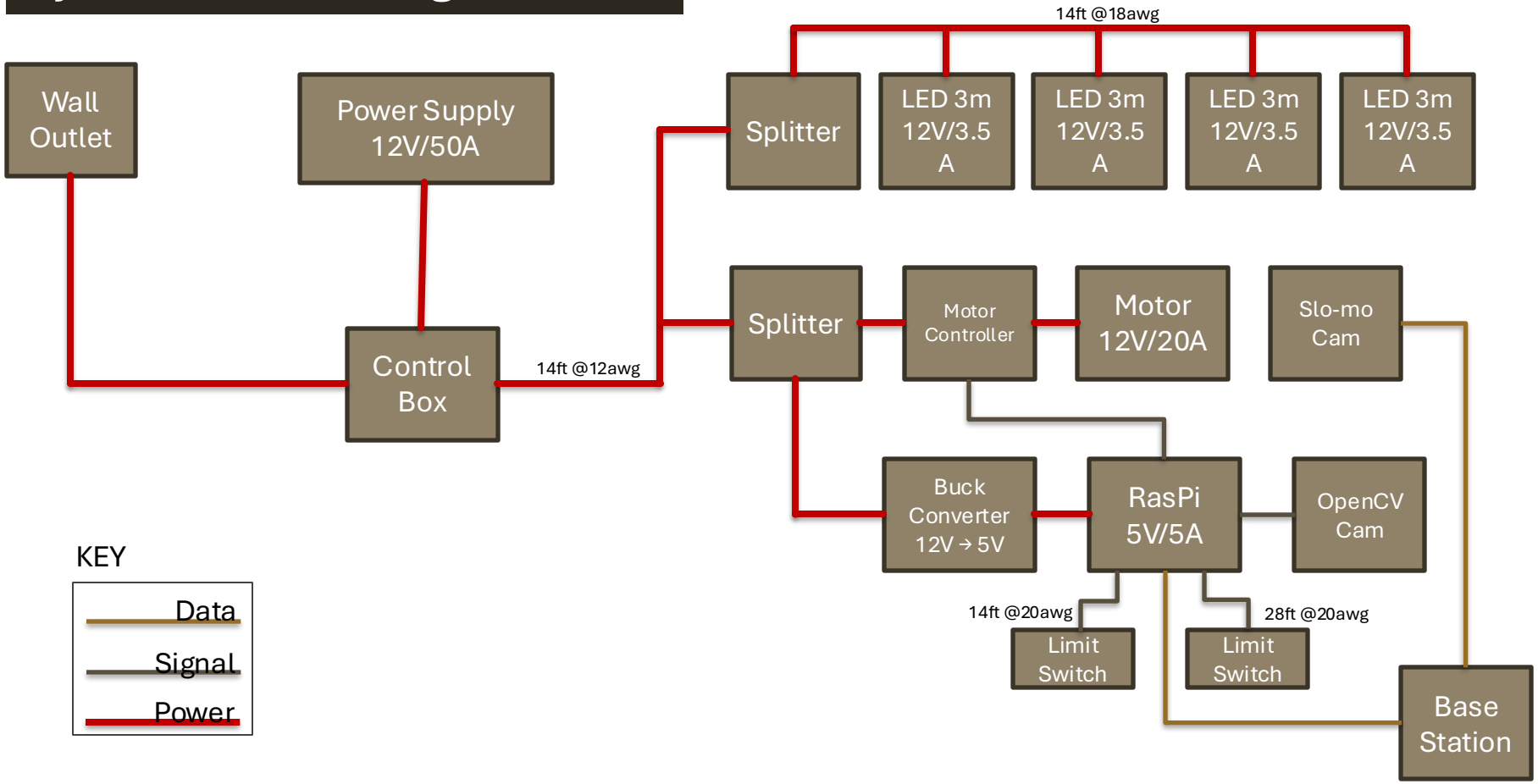

System Block Diagram 12V

Control Box

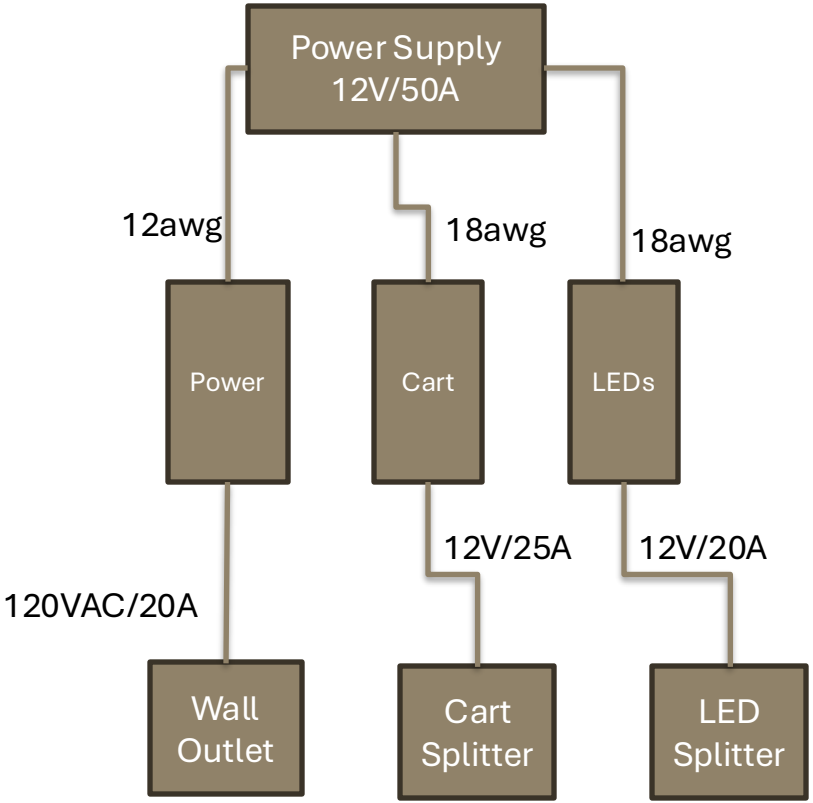

RAT TRACKING LOOP

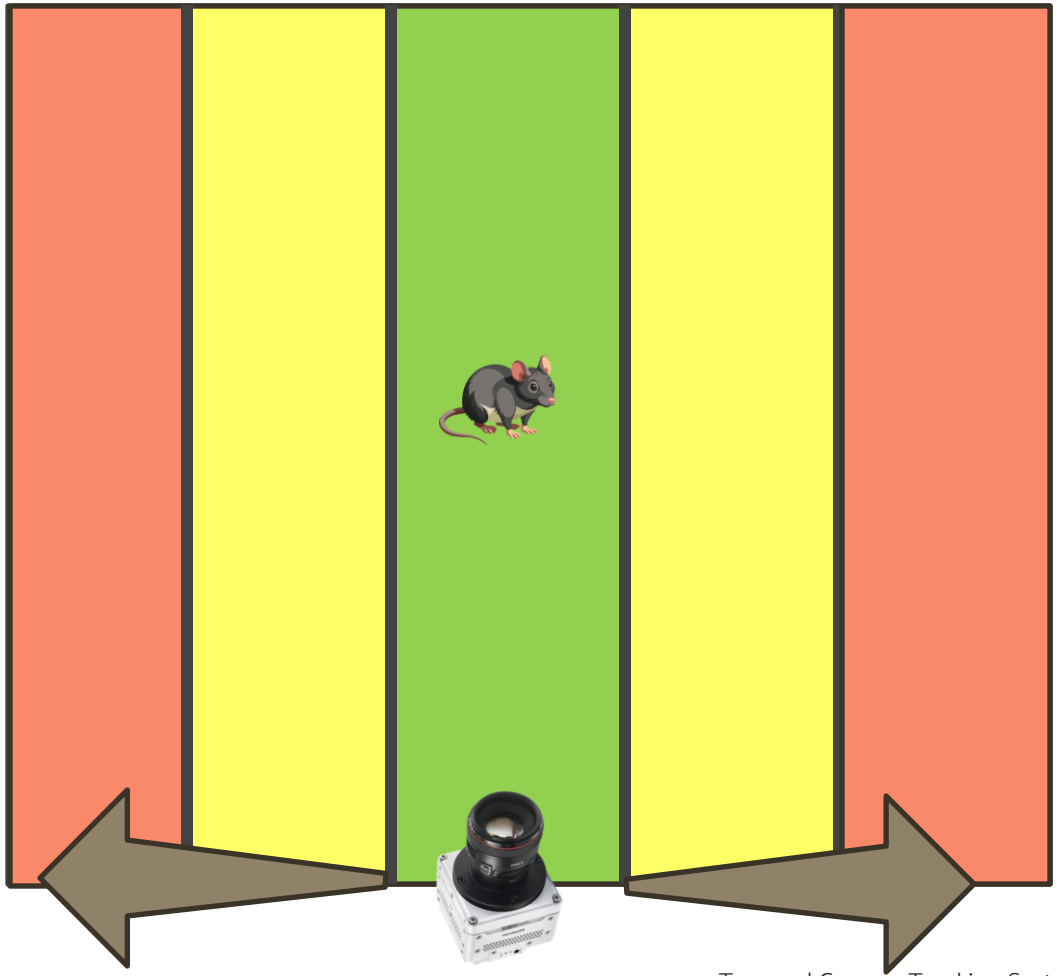

ROS2 Node Diagram

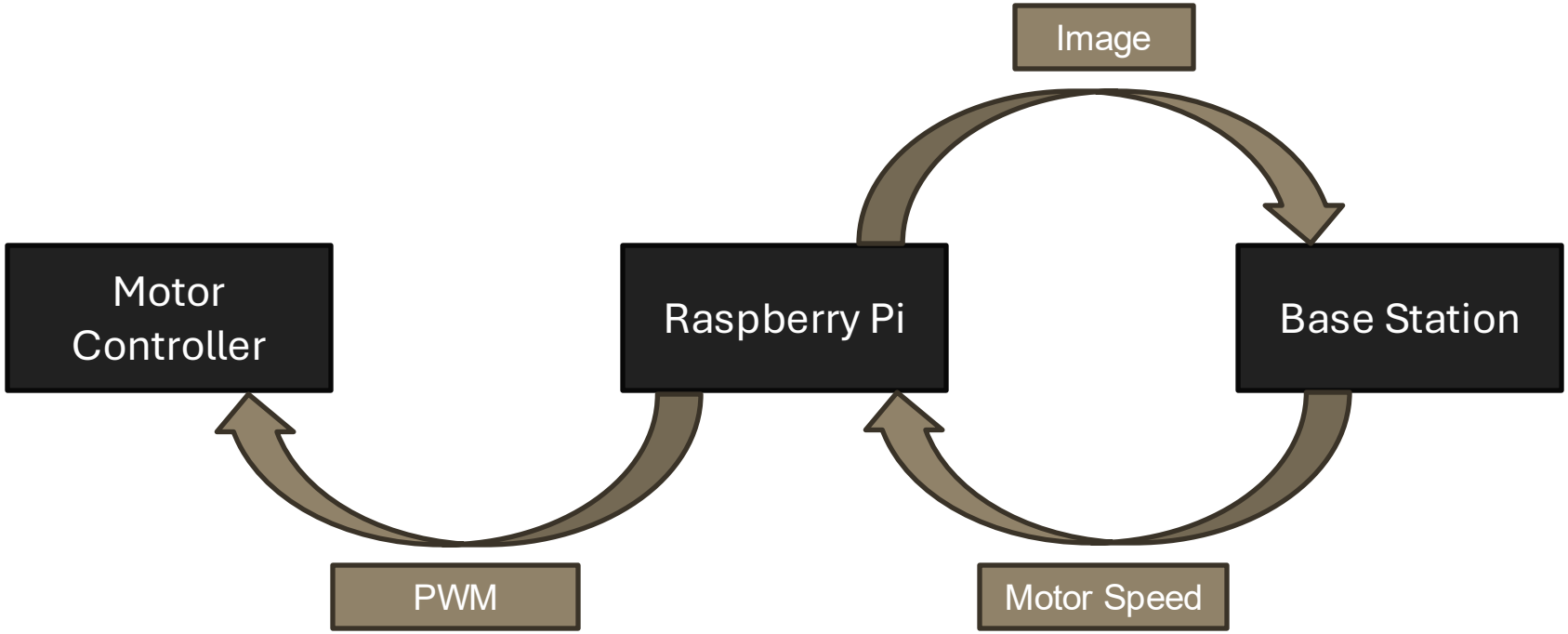

CALCULATIONS

FINAL DESIGN

MOTOR

```
Torque required for acceleration: 0.0970 N·m
Required RPM to achieve 1 m/s: 787.34 RPM
```

Used MATLAB code to calculate the minimum RPM and torque needed

REV Robotics Neo 550 Brushless Motor

Max RPM: 10,000
Max torque: 0.97Nm

```
% Given values
mass_kg = 4;
acceleration = 2; % Acceleration in m/s^2
diameter_inches = 0.955; % Pitch diameter in inches
linear_speed = 1; % Linear speed in m/s (target speed for the camera)

% Conversion factors
inch_to_meter = 0.0254; % Conversion factor from inches to meters

% Step 1: Convert values

diameter_meters = diameter_inches * inch_to_meter; % Convert diameter to meters
radius_meters = diameter_meters / 2; % Radius in meters

% Step 2: RPM Calculation
rpm = (linear_speed * 60) / (2 * pi * radius_meters);

% Step 3: Calculate the force (F = m * a)
force = mass_kg * acceleration; % Force in Newtons

% Step 4: Calculate the torque (τ = F * r)
torque = force * radius_meters; % Torque in N·m

% Display results
fprintf('Torque required for acceleration: %.4f N·m\n', torque);
fprintf('Required RPM to achieve 1 m/s: %.2f RPM\n', rpm);
```

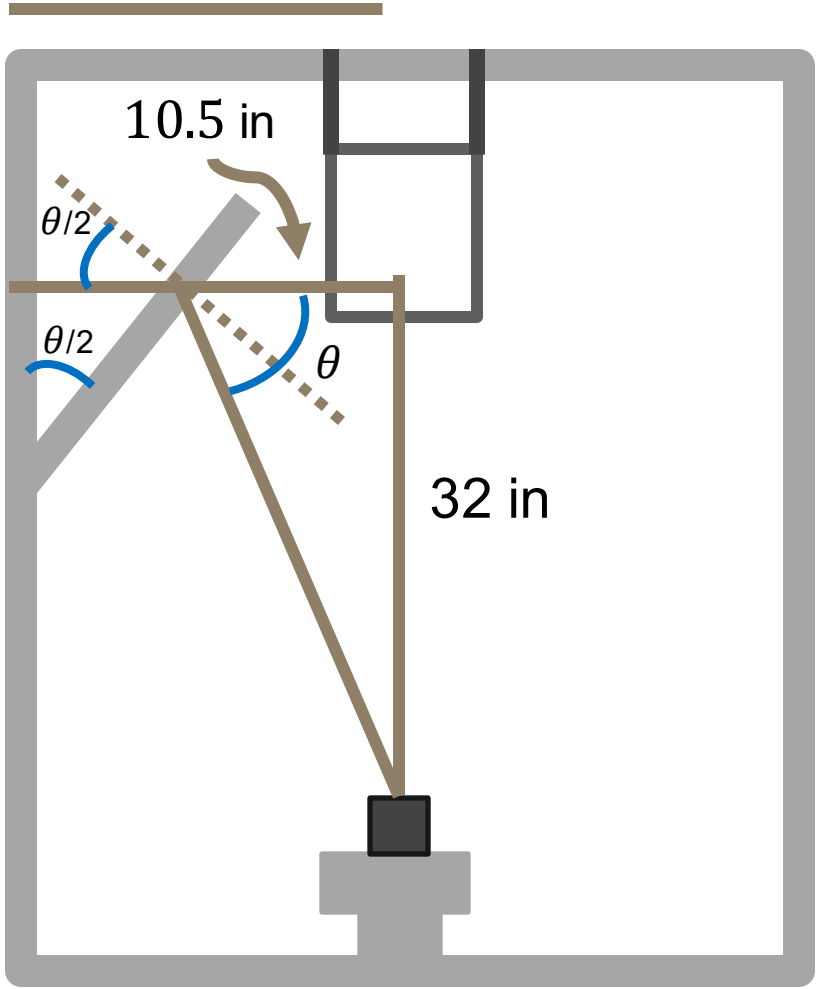

MIRROR ANGLE

$$\theta = \arctan\left(\frac{32}{10.5}\right) = 71.8° \approx 72°$$

$$\emptyset = \frac{\theta}{2} = \frac{72}{2} = 36°$$

Optimal mirror angle will be $36°$

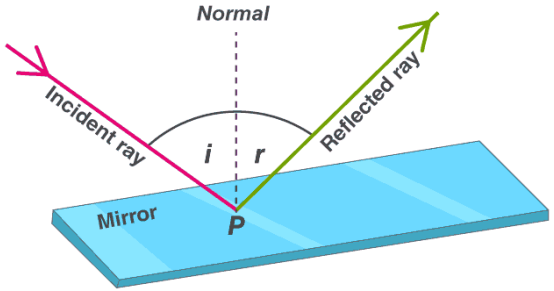

Testing Methods & Results

VELOCITY

MINIMUM 1M/S

TEST METHODS

1. Mark two lines 1 meter apart underneath the camera's mount
2. Record the system in motion at 240FPS using 40% motor speed
3. Count the number of frames taken for the system to travel from one line to the other
4. Divide 240 FPS by the number of frames calculated
5. Repeat for three trials and calculate average

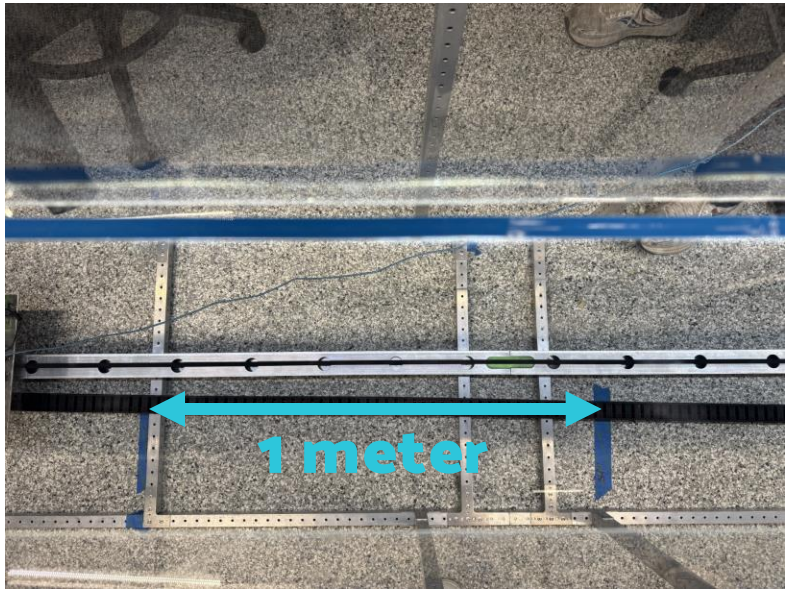

$$\frac{1 meter}{\# \ of \ frames} \times \frac{240 \ frames}{1 \ second} = m/s$$

MOTOR SPEED FOR TEST

Testing range determined from manufacturer specifications

40% to 60%

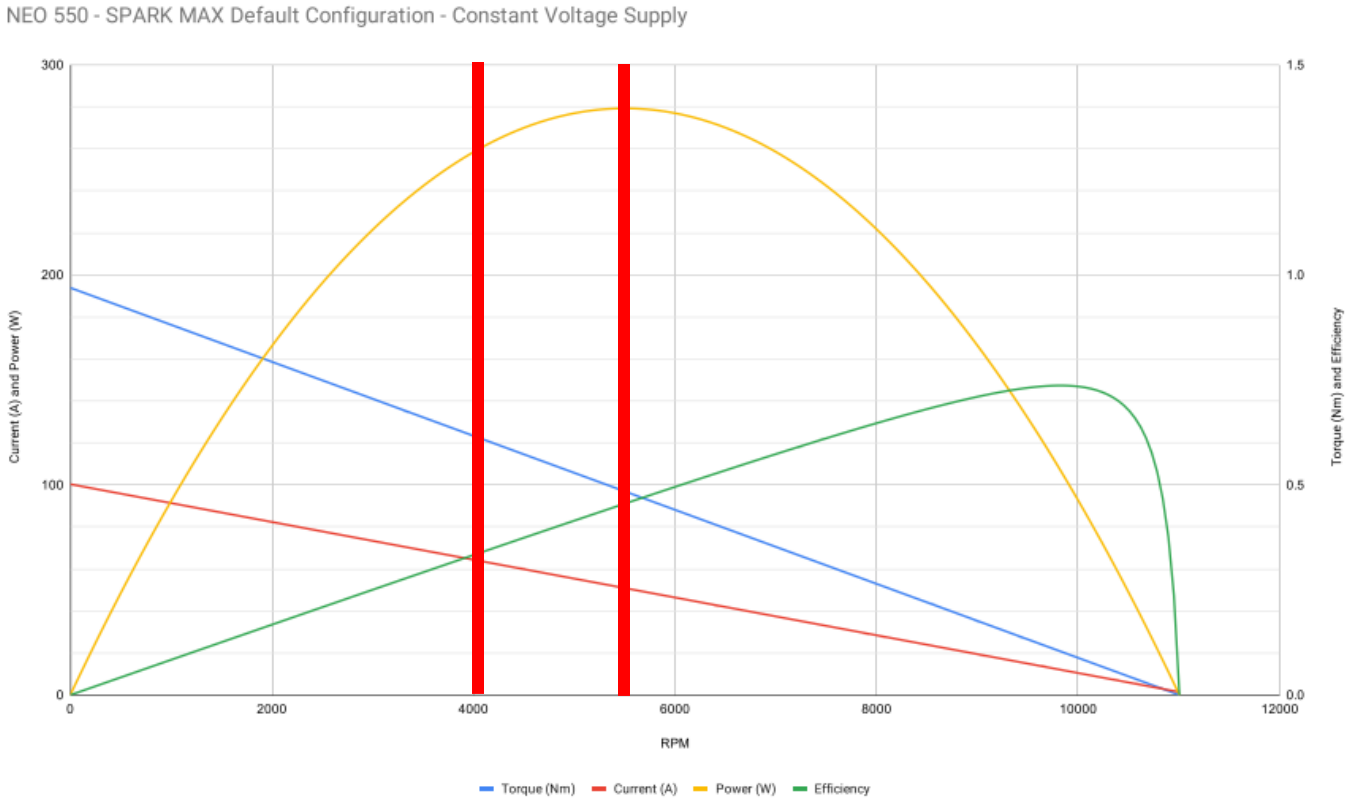

TEST RESULTS

TEST RESULTS

Trial	# of Frames	Speed (m/s)
1	40	6.0
2	38	6.3
3	48	5.0
Average	42	**5.7**

Five times faster than the design criteria

ACCELERATION

MINIMUM 1 M/s^2

TEST METHODS

1. Marked the motor with a tape as indicator
2. Recorded time taken for motor to reach a constant speed at 40% motor capacity (RPM is measured start to end using a tachometer)
3. Divided speed by the time taken to reach constant speed to get the linear acceleration of the motor.

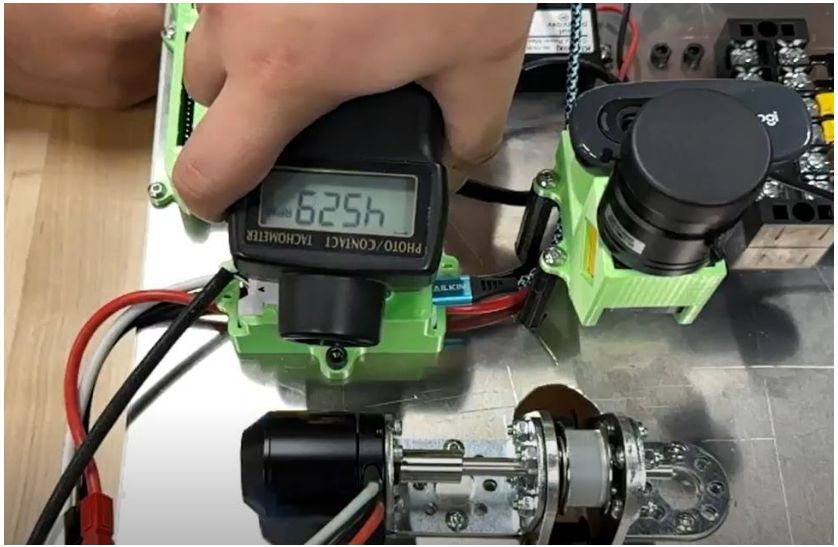

$$\frac{RPM}{Time} \times \frac{2\pi r}{60\ seconds} = m/s^2$$

TEST RESULTS

TEST RESULTS

Trial	RPM	Time	Acceleration
1	4529	0.58	9.9176
2	4457	0.63	8.9854
3	4613	0.55	10.653
Average	4533	0.587	**9.852**

Five times faster than the design criteria

VIDEO FOOTAGE

3 ANGLES VISIBLE

TEST RESULTS

TEST RESULTS

Criteria	Minimum Value	Pass/Fail
Visible angles	3	Pass

Cost Analysis

FRAME

	Part	Amount	Unit Cost	Total
Extrusion	1" x 1" x 0.0625"	36	$12.99	$467.64
	1" x 2" x 0.125"	2	$24.99	$49.98
	1" x 2" x 0.125"	2	$15.49	$30.98
Gussets	T Gusset	42	$2.24	$94.08
	90 Degree Gusset	15	$2.24	$33.60
Additional	Rivets	8	$9.74	$77.92
	Window Film Adhesive	2	$9.90	$19.80
	LED Strips	2	$16.99	$33.98
	Glue	2	$12.59	$25.18
Total				**$833.16**

MOTION SYSTEM

Part	Amount	Unit Cost	Total
Pulley	1	$8.99	$8.99
Timing Belt	1	$14.99	$14.99
Ball Bearing	1	$3.99	$3.99
U-Bracket	1	$4.49	$4.49
L-Bracket	1	$5.99	$5.99
Shaft Coupler	1	$4.99	$4.99
Bearing	2	$5.99	$11.98
D-Shaft	1	$2.89	$2.89
Micro Limit Switch	1	$2.49	$2.49
Total			**$60.80**

ELECTRONICS

Part	Amount	Unit Cost	Total
Drive Screws	1	$13.40	$13.40
Locknuts	1	$5.57	$5.57
Sheet 1/8”x12”x12”	2	$29.30	$58.60
Sheet 1/8”x6”x6”	1	$9.38	$9.38
Spacers	8	$1.38	$11.04
Steel Locknut	1	$6.18	$6.18
Socket Head Screw	1	$9.75	$9.75
Drag Chain	2	$22.39	$44.78
Toggle Switch	2	$6.39	$12.78
Terminal Block 12	1	$10.39	$10.39
Terminal Block 6	1	$7.19	$7.19
Converter	1	$9.99	$9.99
Standoffs	1	$2.99	$2.99

Part	Amount	Unit Cost	Total
Zip Ties	1	$6.99	$6.99
RasPi Active Cooler	1	$12.99	$12.99
Power Supply	1	$8.29	$8.29
Raspberry Pi 4	1	$74.99	$74.99
Zip Tie Mounts	1	$6.99	$6.99
M3 Screw Kit	1	$6.99	$6.99
Power Cord	1	$8.40	$8.40
Plug Adapter	1	$8.79	$8.79
Tubing Kit	1	$6.99	$6.99
10 Pin Connector	1	$9.49	$9.49
Connector Kit	1	$9.99	$9.99
Total			**$362.94**

COST BREAKDOWN

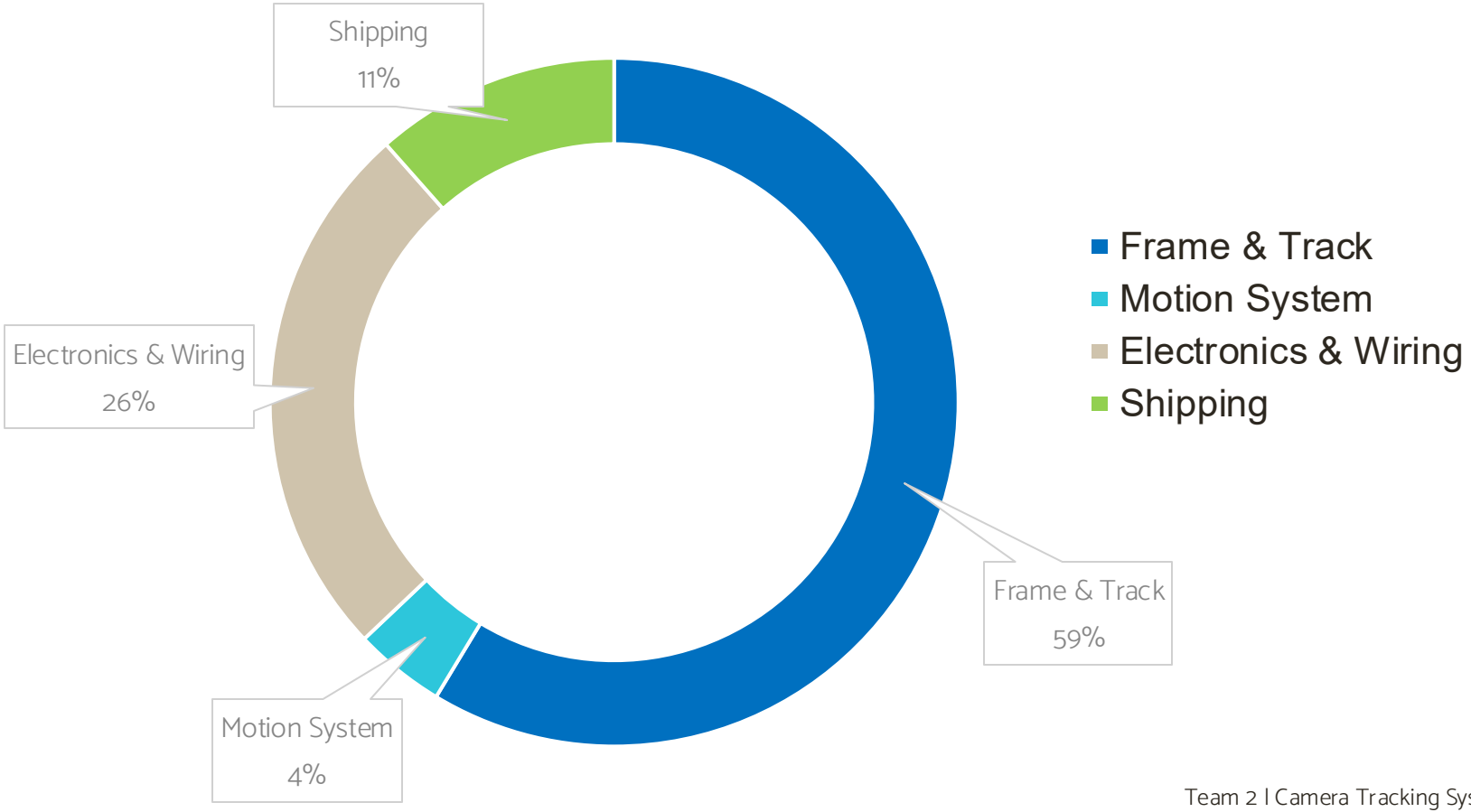

FINANCING

Source	Amount
Senior Design Budget	$1,000
Dr. Spence	$420.62
Total	**$1,420.62**

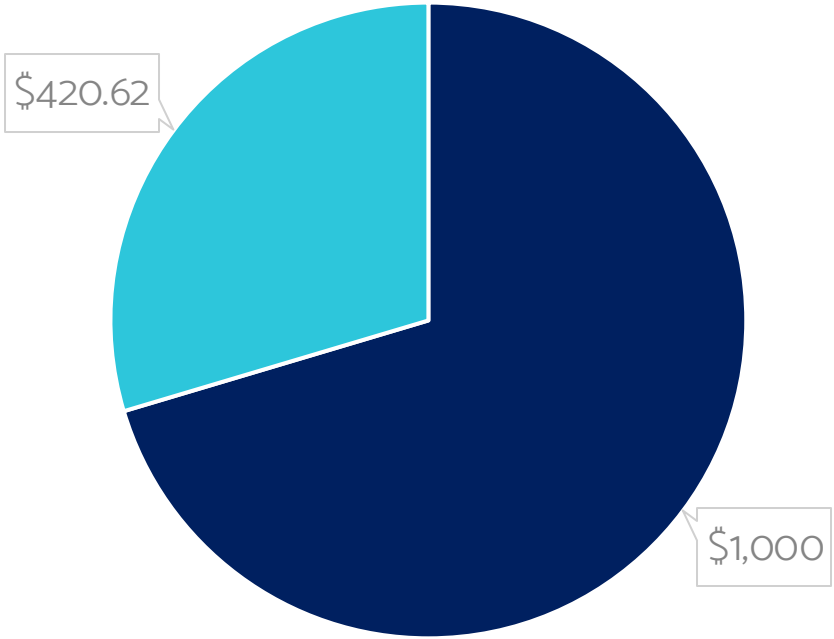

*Approximately $220 over estimated cost

Success Implications & Next Steps

PROTOTYPE

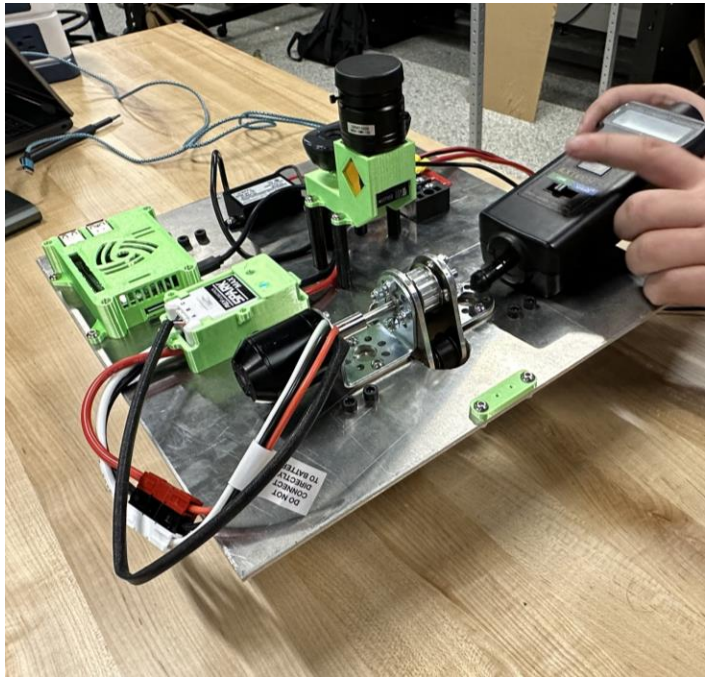

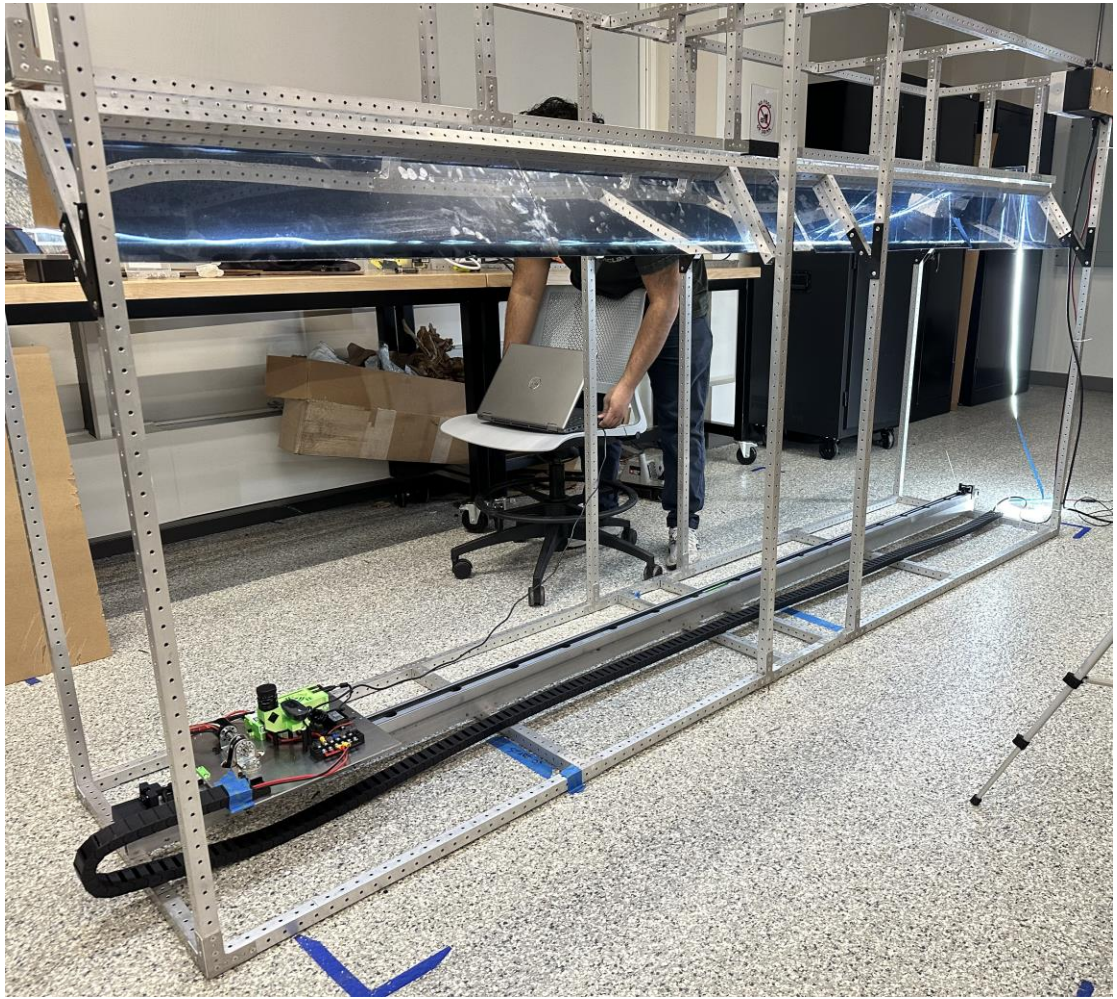

DESIGN CRITERIA (PROGRESS)

	REQUIREMENT	METRIC	TARGET VALUE	JUSTIFICATION
NON-NEGOTIABLE	Video quality	FPS	250	Client
	Camera speed	m/s	1	Client
	Camera acceleration	m/s2	1	Client
	Track length	m	>3	Client
	Communication interface	-	ROS	Client
NEGOTIABLE	Modular design	Yes/No	Yes	Client
	Angles of footage	# (views)	3 (bottom, left/right)	Client

UNITED NATIONS SDG

GOAL 3: GOOD-HEALTH & WELL BEING

Prototype will serve as a tool for further research in The Spence Lab that addresses the following targets:

- Reducing premature mortality from non-communicable diseases
- Access to quality essential health-care services

GOAL 15: LIFE ON LAND

The design allows for more data to be collected from one animal, reducing the number of animals used and addressing the following target:

- Protect animal species

NEXT STEPS – FUTURE IMPROVEMENTS

- Increasing structural stability with cross bracing between support beams.
- Upgrading mirror design to allow for adjustable angles.
- Refining bearing block design to reduce reliance on 3D printed parts, improving precision in the motion system.
- Enhancing lighting for more accurate data recording.

THANK YOU!
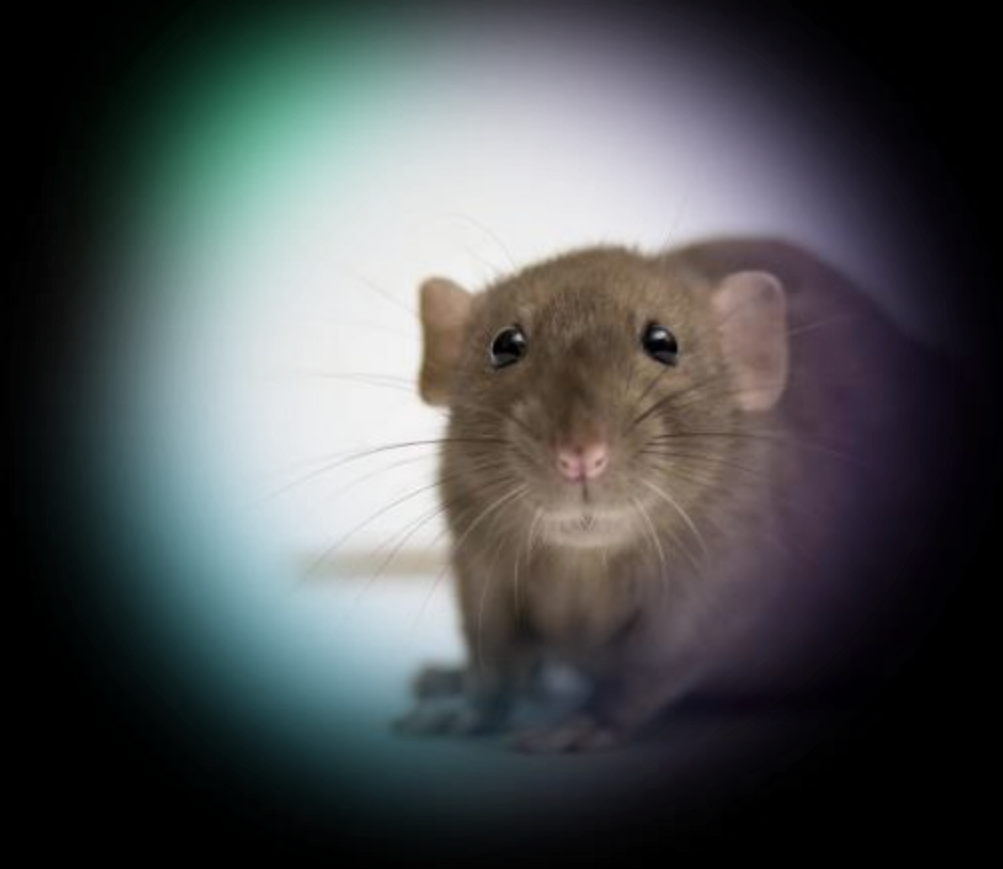
QUESTIONS?