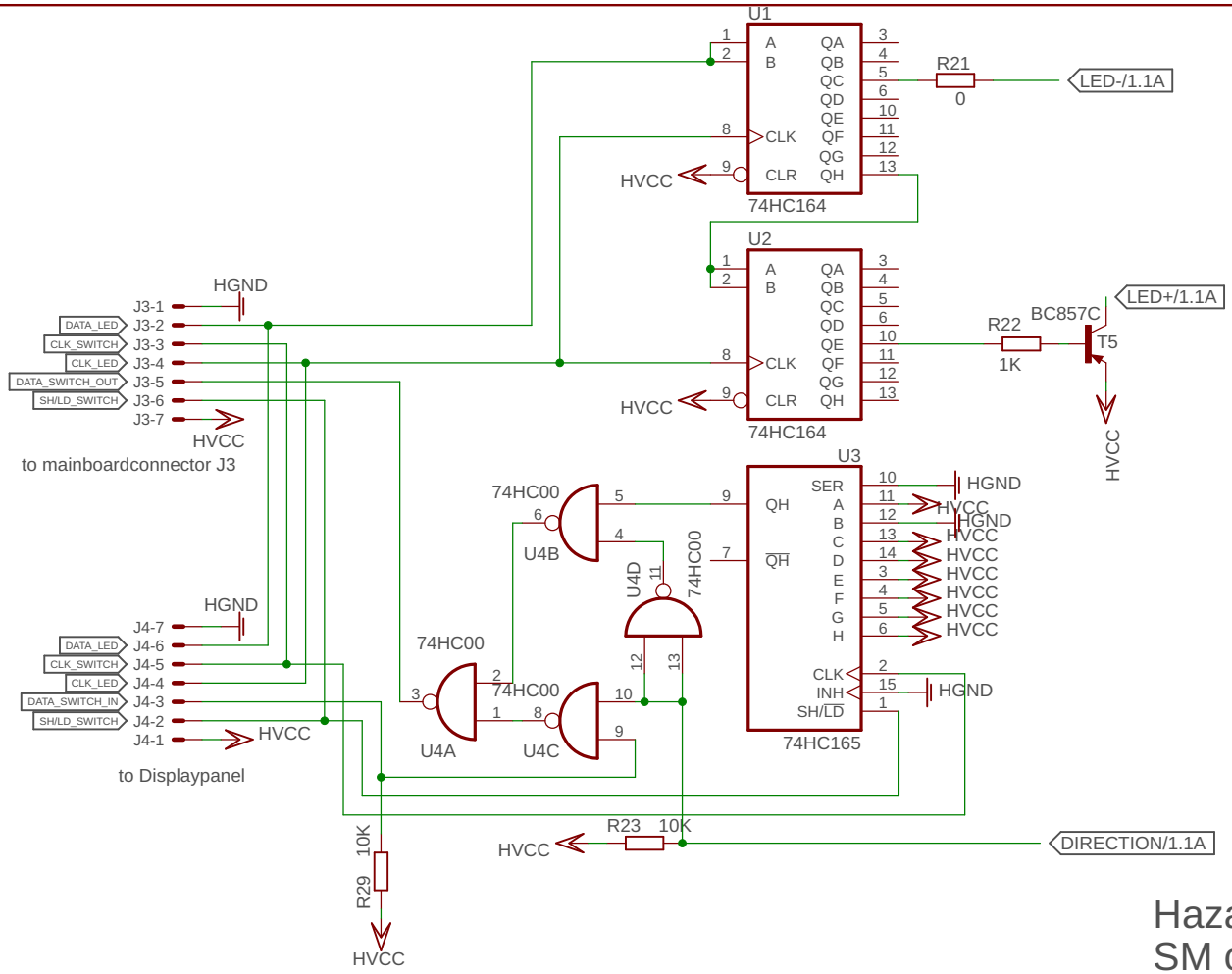

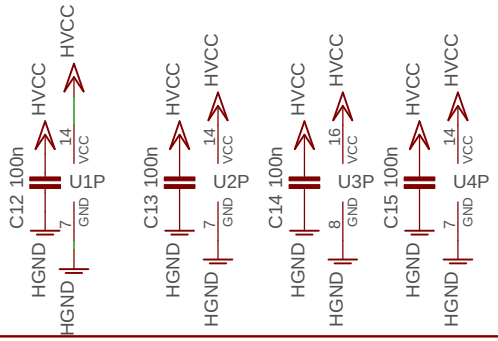

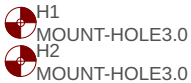

Hazardous area, high voltage possible from SM controller. Use external cables and components with isolation for 230V
Use at your own risk and responsibility

550/750 Watt Brushless Sewing Maschine Controller Modificationboard

external start/stop switch, direction changebutton with LED, speedcontrol potentiometer, securityswitch with restart interlock

TITLE: SMC_FrontPanel_ExtensionBoard_V14_5

Document Number:
Christian Brandtner , Paderborn, 06/2022
Benutzung auf eigene Gefahr und Verantwortung

REV: 14.5

Date: nicht gespeichert!

Sheet: 2/2