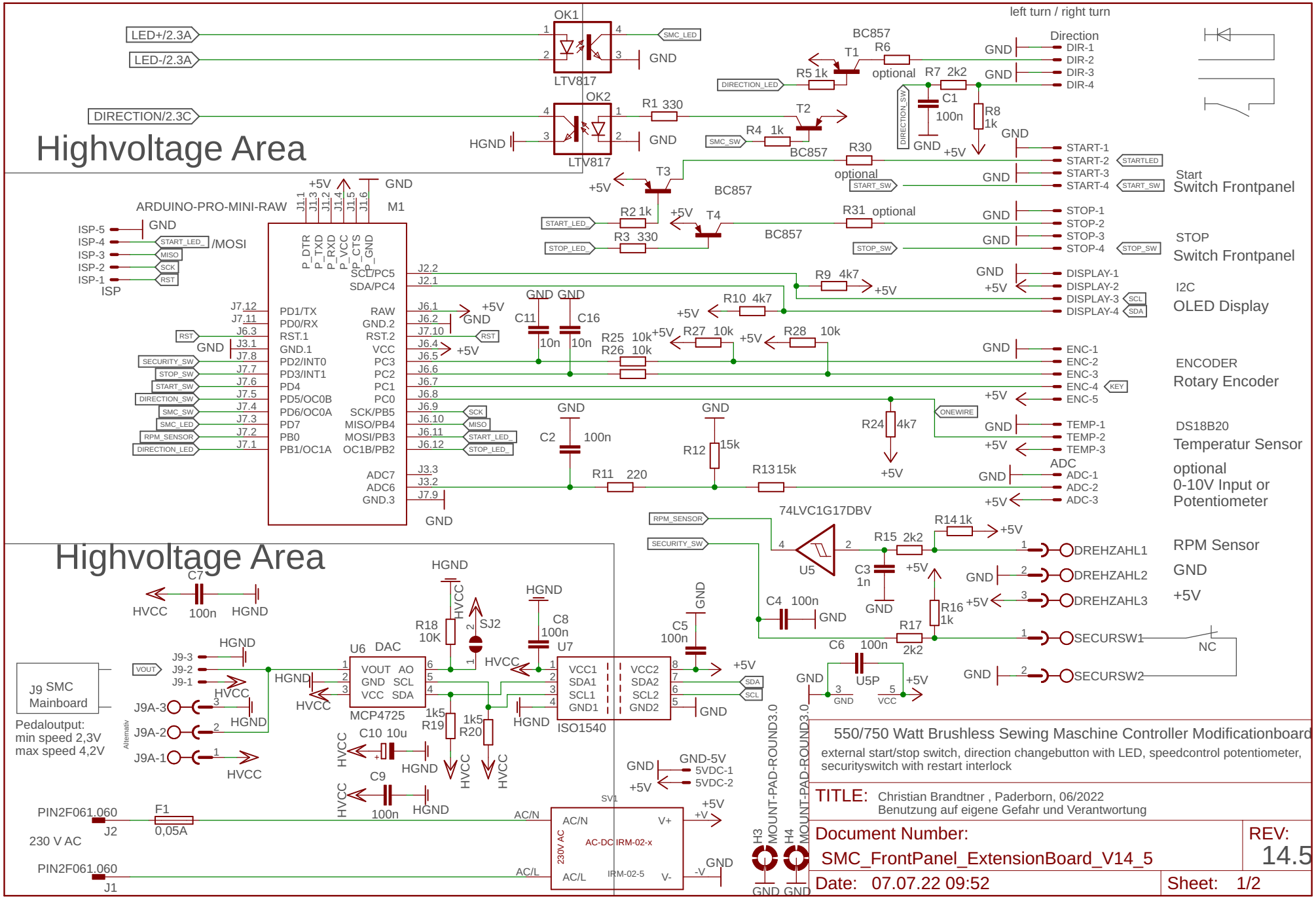
Highvoltage Area
LED+/2.3A
LED-/2.3A
DIRECTION/2.3C
OK1
LTV817
OK2
LTV817
HGND
SMC_LED
GND
R1 330
left turn / right turn
Direction
DIR-1
DIR-2
DIR-3
DIR-4
BC857
T1
R6
optional
R5 1k
DIRECTION_LED
R7 2k2
C1
100n
R8
1k
DIRECTION_SW
T2
R4 1k
SMC_SW
BC857
R30
optional
START_SW
START-1
START-2
STARTLED
START-3
START-4
Start
Switch Frontpanel
T3
BC857
R2 1k
START_LED_
T4
R31 optional
BC857
R3 330
STOP_LED_
STOP_SW
STOP-1
STOP-2
STOP-3
STOP-4
STOP
Switch Frontpanel
ARDUINO-PRO-MINI-RAW
M1
ISP-5
ISP-4
ISP-3
ISP-2
ISP-1
ISP
/MOSI
MISO
SCK
RST
J1.1
J1.3
J1.2
J1.4
J1.5
J1.6
P_DTR
P_TXD
P_RXD
P_VCC
P_CTS
P_GND
SCL/PC5
SDA/PC4
PD1/TX
PD0/RX
RST.1
GND.1
PD2/INT0
PD3/INT1
PD4
PD5/OC0B
PD6/OC0A
PD7
PB0
PB1/OC1A
RAW
GND.2
RST.2
VCC
PC3
PC2
PC1
PC0
SCK/PB5
MISO/PB4
MOSI/PB3
OC1B/PB2
ADC7
ADC6
GND.3
SECURITY_SW
STOP_SW
START_SW
DIRECTION_SW
SMC_SW
SMC_LED
RPM_SENSOR
DIRECTION_LED
START_LED_
STOP_LED_
R9 4k7
R10 4k7
C11
10n
C16
10n
R25 10k
R26 10k
R27 10k
R28 10k
DISPLAY-1
DISPLAY-2
DISPLAY-3
DISPLAY-4
I2C
OLED Display
ENC-1
ENC-2
ENC-3
ENC-4
ENC-5
KEY
ENCODER
Rotary Encoder
ONEWIRE
R24 4k7
TEMP-1
TEMP-2
TEMP-3
DS18B20
Temperatur Sensor
C2
100n
R12
15k
R11 220
R13 15k
ADC-1
ADC-2
ADC-3
ADC
optional
0-10V Input or
Potentiometer
74LVC1G17DBV
U5
R14 1k
R15 2k2
C3
1n
C4 100n
R16
1k
R17
2k2
C6 100n
U5P
DREHZAHL1
DREHZAHL2
DREHZAHL3
SECURSW1
SECURSW2
NC
RPM Sensor
GND
+5V
Highvoltage Area
C7
100n
R18
10K
SJ2
C8
100n
U7
C5
100n
J9 SMC
Mainboard
Pedaloutput:
min speed 2,3V
max speed 4,2V
J9-3
J9-2
J9-1
J9A-3
J9A-2
J9A-1
VOUT
Alternativ
U6 DAC
VOUT AO
GND SCL
VCC SDA
MCP4725
R19 1k5
R20 1k5
C10 10u
C9
100n
VCC1
SDA1
SCL1
GND1
VCC2
SDA2
SCL2
GND2
ISO1540
SDA
SCL
GND-5V
5VDC-1
5VDC-2
SV1
AC/N
AC/L
V+
V-
AC-DC IRM-02-x
IRM-02-5
230V AC
PIN2F061.060
J2
F1
0,05A
230 V AC
PIN2F061.060
J1
H3
H4
MOUNT-PAD-ROUND3.0
550/750 Watt Brushless Sewing Maschine Controller Modificationboard
external start/stop switch, direction changebutton with LED, speedcontrol potentiometer, securityswitch with restart interlock
TITLE:
Christian Brandtner , Paderborn, 06/2022
Benutzung auf eigene Gefahr und Verantwortung
Document Number:
SMC_FrontPanel_ExtensionBoard_V14_5
REV:
14.5
Date: 07.07.22 09:52
Sheet: 1/2
N$15
F2
N$21
Alternativ

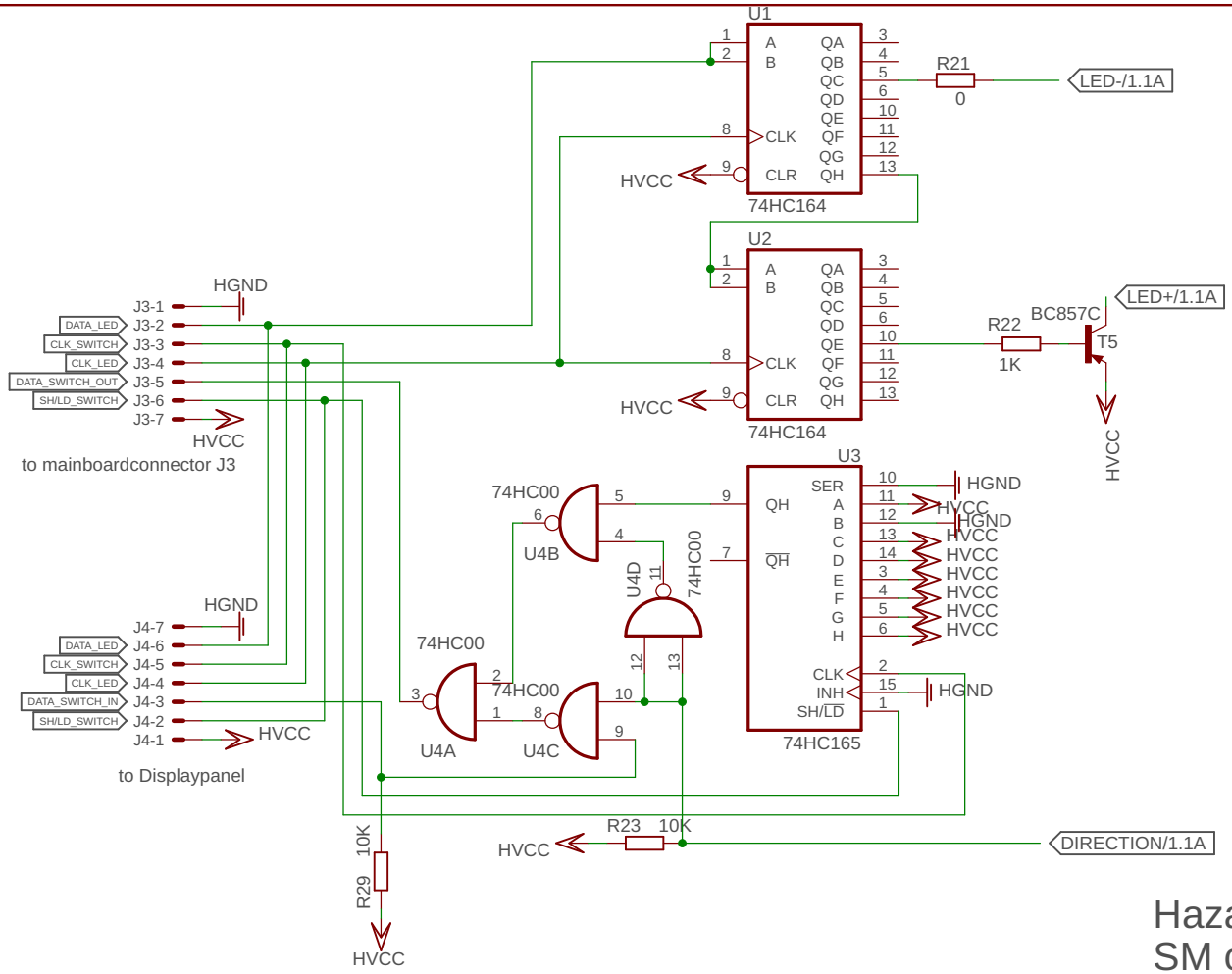


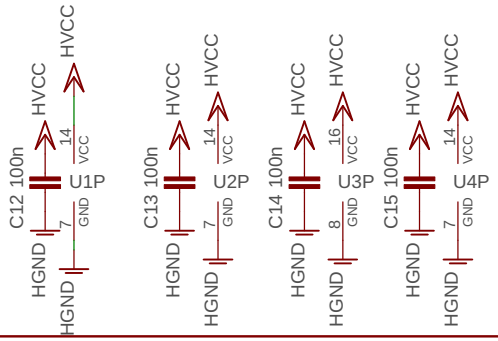


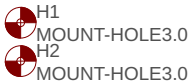


Hazardous area, high voltage possible from SM controller. Use external cables and components with isolation for 230V
Use at your own risk and responsibility

550/750 Watt Brushless Sewing Maschine Controller Modificationboard

external start/stop switch, direction changebutton with LED, speedcontrol potentiometer, securityswitch with restart interlock

TITLE: SMC_FrontPanel_ExtensionBoard_V14_5

Document Number:
Christian Brandtner , Paderborn, 06/2022
Benutzung auf eigene Gefahr und Verantwortung

REV: 14.5

Date: 07.07.22 09:52

Sheet: 2/2