RESISTORS
The following conditions are true for all unless otherwise specified:
- 0805 footprint
- 0.125 W

CAPACITORS (CERAMIC)
The following conditions are true for all unless otherwise specified:
- 0805 footprint

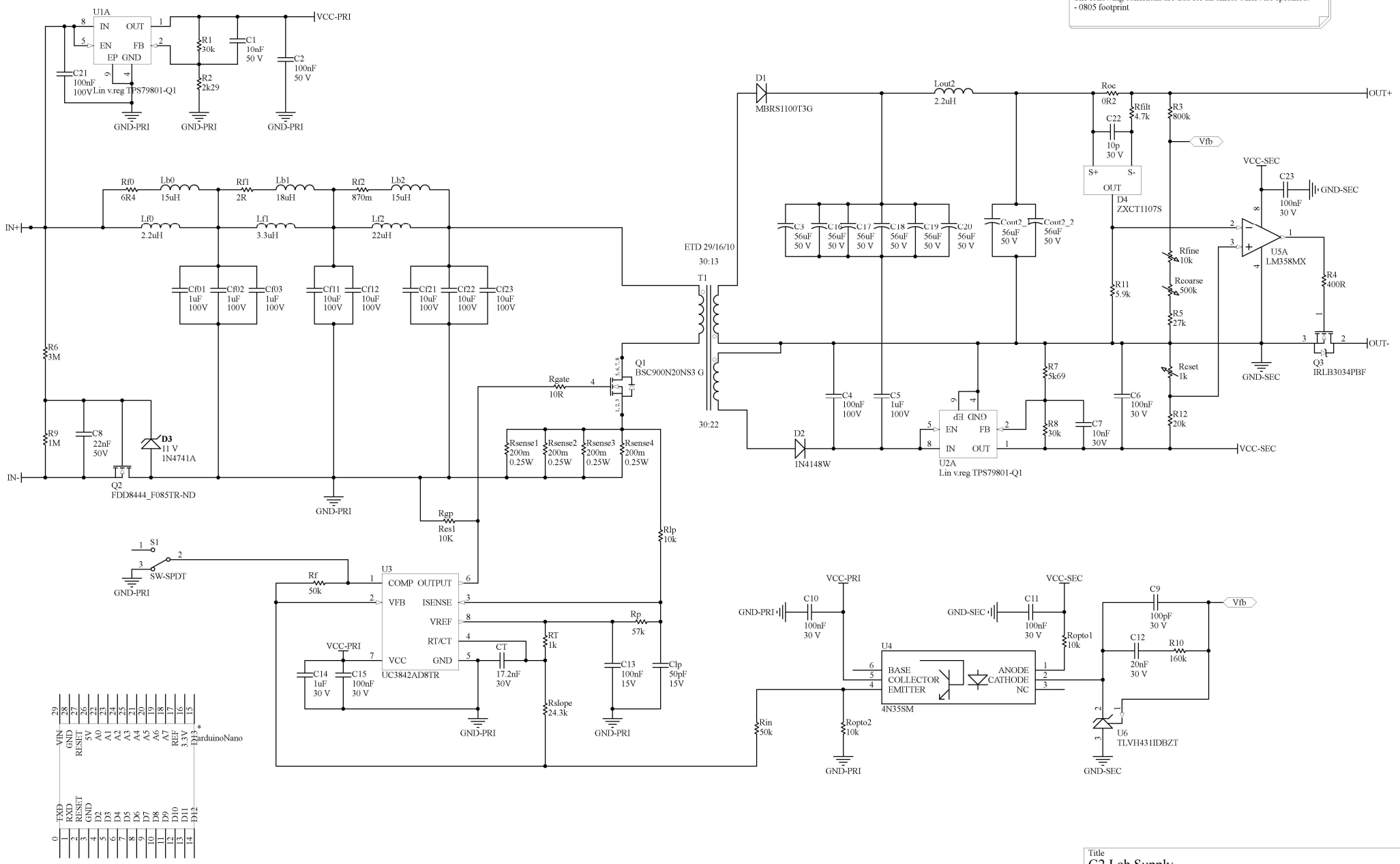

Title	G2 Lab Supply	
Size	A3	Number 1B	Revision
Date:	09/01/2018	Sheet of
File:	C:\Users\...\Sheet2.SchDoc	Drawn By: