RESISTORS
The following conditions are true for all unless otherwise specified:
- 0805 footprint
- 0.125 W

CAPACITORS (CERAMIC)
The following conditions are true for all unless otherwise specified:
- 0805 footprint

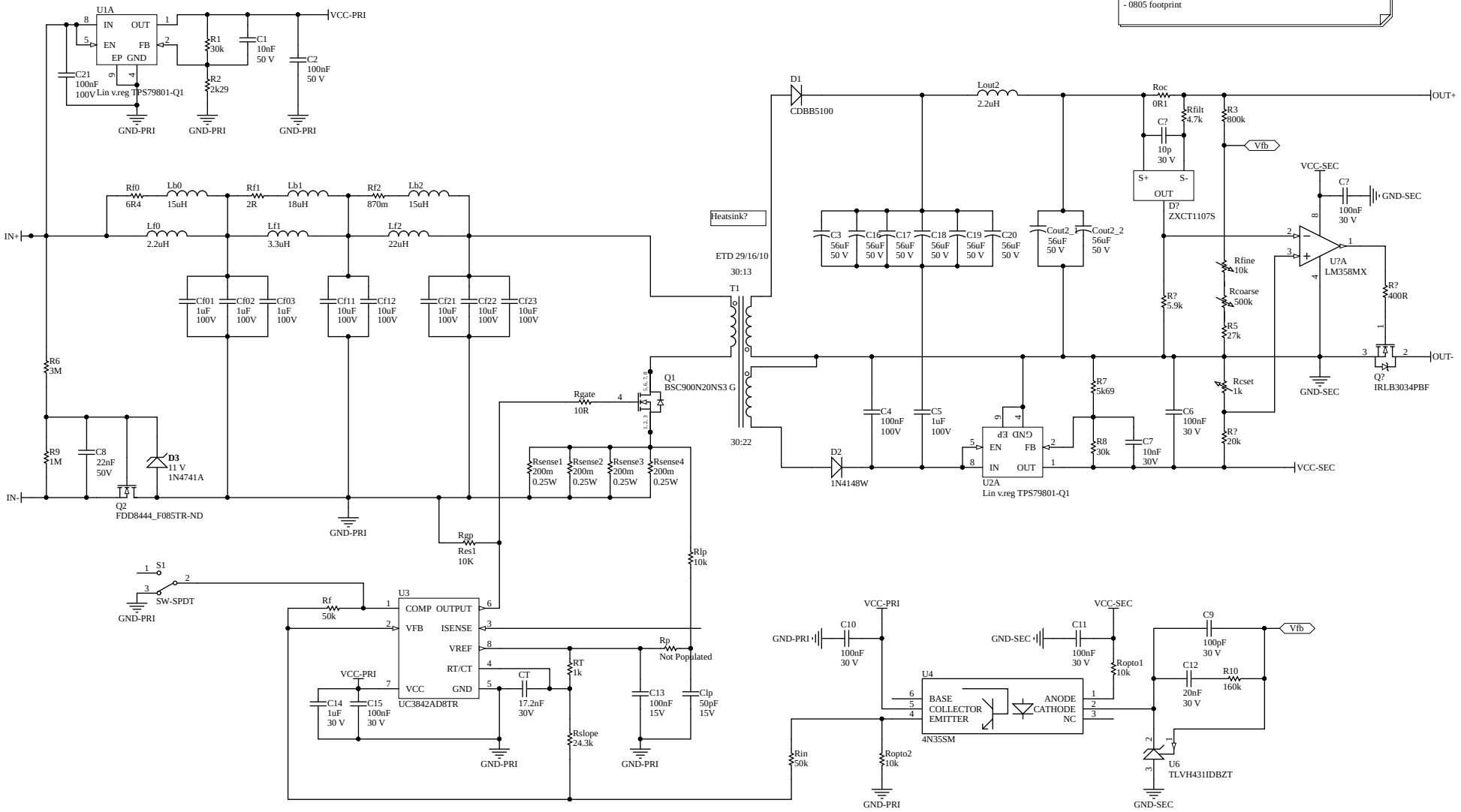

Title		
G2 Lab Supply		
Size: A3	Number: 1B	Revision:
Date: 1/4/2018		Sheet of
File: C:\Users\..\Sheet2.SchDoc		Drawn By: