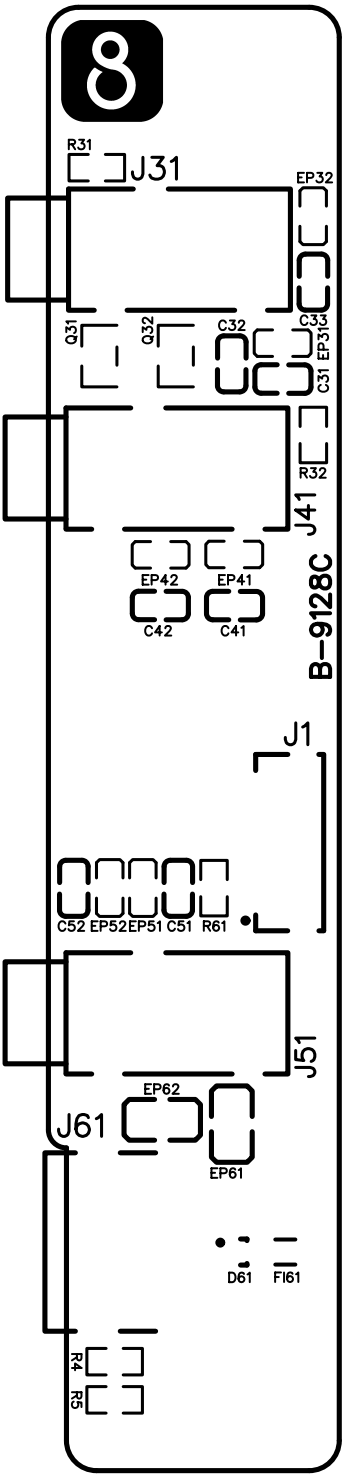
8
R31
J31
EP32
Q31
Q32
C32
C33
EP33
C31
R32
J41
EP42
EP41
C42
C41
B-9128C
J1
C52
EP52
EP51
C51
R61
J51
EP62
J61
EP61
D61
FI61
R4
R5