REVISION TABLE			
REVISION	DESCRIPTION	DATE	APPROVED
B	RELEASE TO PRODUCTION	07AUG17	J UMHOEFER
C	UPDATED WIRE TWIST SPECIFICATION	04SEPT17	J UMHOEFER
C01	UPDATE TWIST COUNT	22NOV17	J UMHOEFER

NOTES, UNLESS OTHERWISE SPECIFIED

1. INTERPRET DRAWING PER ASME Y14.41-2003.
2. WIRE CONDUCTOR MATERIAL: COPPER
3. (1) LOCATION INDICATED IS CIRCUIT 1
4. COMPONENTS AND MATERIALS MUST BE RoHS COMPLIANT AND TRACEABILITY OF SUCH MUST BE MADE AVAILABLE UPON REQUEST
5. INDICATED WIRE STRIP LENGTHS ARE FOR REFERENCE ONLY. WIRE STRIP LENGTHS TO BE AS APPROPRIATE FOR INDICATED CONNECTORS
6. WIRE LENGTHS IN BOM TABLE ARE FOR REFERENCE AND DO NOT INCLUDE ALLOWANCE FOR STRIPPED ENDS OR TWIST
7. WIRING AND CONNECTORS MUST BE UL RECOGNIZED UNDER ECBT2. CONNECTORS MUST BE RATED V-2 OR BETTER UNDER UL-94

8. PRINT LABEL AS INDICATED:
   P1 LABEL TEXT:
   WH-00086
   REV. C01
   J6
   P1 LABEL COLOR: WHITE

9. TOTAL TWISTS TOLERANCE IS +/-10% UNLESS OTHERWISE SPECIFIED. TPM IS TWISTS PER METER. TPM VALUES FOR REFERENCE ONLY.

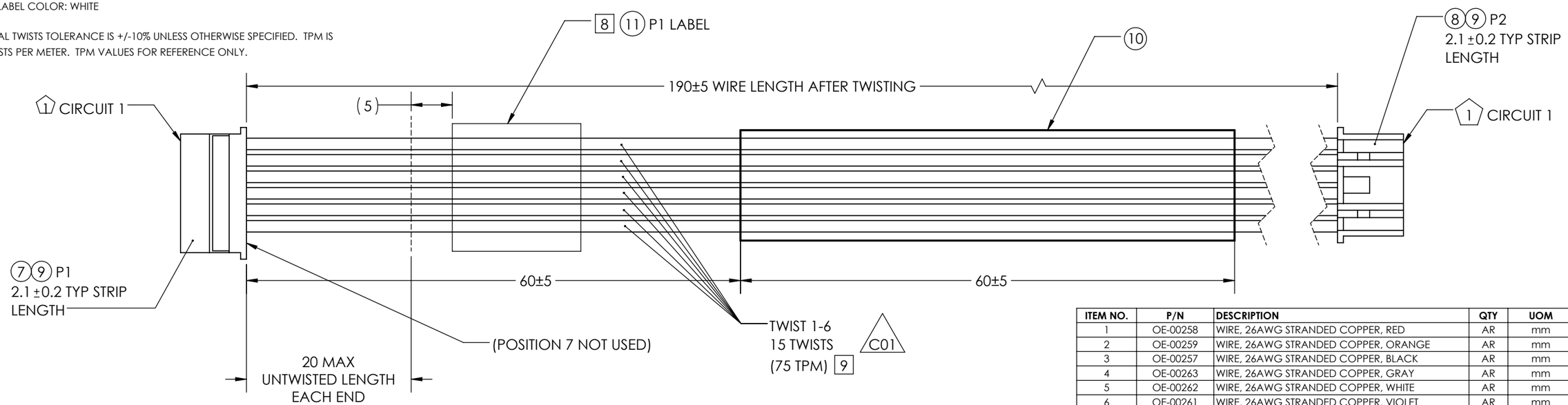

ITEM NO.	P/N	DESCRIPTION	QTY	UOM
1	OE-00258	WIRE, 26AWG STRANDED COPPER, RED	AR	mm
2	OE-00259	WIRE, 26AWG STRANDED COPPER, ORANGE	AR	mm
3	OE-00257	WIRE, 26AWG STRANDED COPPER, BLACK	AR	mm
4	OE-00263	WIRE, 26AWG STRANDED COPPER, GRAY	AR	mm
5	OE-00262	WIRE, 26AWG STRANDED COPPER, WHITE	AR	mm
6	OE-00261	WIRE, 26AWG STRANDED COPPER, VIOLET	AR	mm
7	OE-00291	CONNECTOR HOUSING, JST-PA 7POS	1	EACH
8	OE-00290	CONNECTOR HOUSING, JST-PA 6POS	1	EACH
9	OE-00295	CONN TERM PHD CRIMP 24-28AWG TIN (JST-PA)	12	EACH
10	CN-00032	HEAT SHRINK TUBING, 2.5MM RECOVERED ID	60	MM
11	CN-00025	LABEL, HEAT SHRINK, WHITE	1	EACH

PIN ARRANGEMENT TABLE			
WIRE #	COLOR	P1 PIN #	P2 PIN #
1	RED	1	1
2	ORANGE	2	2
3	BLACK	3	3
4	GRAY	4	4
5	WHITE	5	5
6	VIOLET	6	6
NOT USED		7	N/A

UNLESS OTHERWISE SPECIFIED, DIMENSIONS ARE IN MILLIMETERS
INTERPRET DIMENSIONS AND TOLERANCES PER ASME Y14.5M
TRAILING ZEROS DENOTE TOLERANCE
DO NOT SCALE DRAWING
THIRD ANGLE PROJECTION

TOLERANCES
X = ± 0.5
X.X = ± 0.25
X.XX= ± 0.13
ANGLES = ± 1°
UNLESS OTHERWISE SPECIFIED

	APPROVED	DATE
DRAWN BY	E SATHER	11JUL17
DESIGNED BY		

MAYFIELD ROBOTICS
400 CONVENTION WAY
REDWOOD CITY, CA 94063

CABLE, CHEST, UART

DWG NUMBER **WH-00086** REV **C01**
SIZE **B** SCALE 2:1 SHEET 1 of 1