REVISION TABLE				
ECO	REVISION	DESCRIPTION	DATE	APPROVED
	A01	INITIAL RELEASE FOR QUOTE	03FEB17	J UMHOEFER
	A02	UPDATED NOTES, ADDED CM-00275	21APR17	J UMHOEFER
	B	UPDATED SCREW INSTALLATION TORQUE AND REMOVED VENDOR AND VENDOR P/N COLUMNS FROM BOM.	22MAR18	J UMHOEFER

NOTES, UNLESS OTHERWISE SPECIFIED:

1. REFER TO BOM FOR COMPLETE AND CURRENT LIST OF MATERIALS. VENDOR NAME AND VENDOR PN ARE FOR REFERENCE ONLY.
2. COMPONENTS SHOWN WITHOUT ITEM NUMBERS ARE FOR REFERENCE ONLY AND REPORT TO UPPER LEVEL ASSEMBLIES.
3. ~~SOME HARDWARE NOT SHOWN FOR CLARITY.~~
4. COMPONENTS MUST BE RoHS COMPLIANT AND TRACEABILITY OF SUCH MUST BE MADE AVAILABLE UPON REQUEST.
5. FOLLOW MANUFACTURER'S ASSEMBLY INSTRUCTIONS AND ESD HANDLING PRACTICES.
6. THREADED FASTENERS SHALL BE INSTALLED IN ACCORDANCE WITH MANUFACTURERS TORQUE SPECIFICATION UNLESS OTHERWISE SPECIFIED. INSTALLATION TORQUE TO BE:

   1 7.0±0.5 kgf-cm

7. REFER TO MAYFIELD ROBOTICS QA-00025 FOR GENERAL INSPECTION REQUIREMENTS AND SPECIFIC REQUIREMENTS FOR DIMENSIONS INCLUDING "CC-", AN OVAL, AND/OR OTHER MODIFIERS.
8. FINAL ASSEMBLY METHOD TO BE REVIEWED AND APPROVED IN WRITING BY MAYFIELD ROBOTICS.

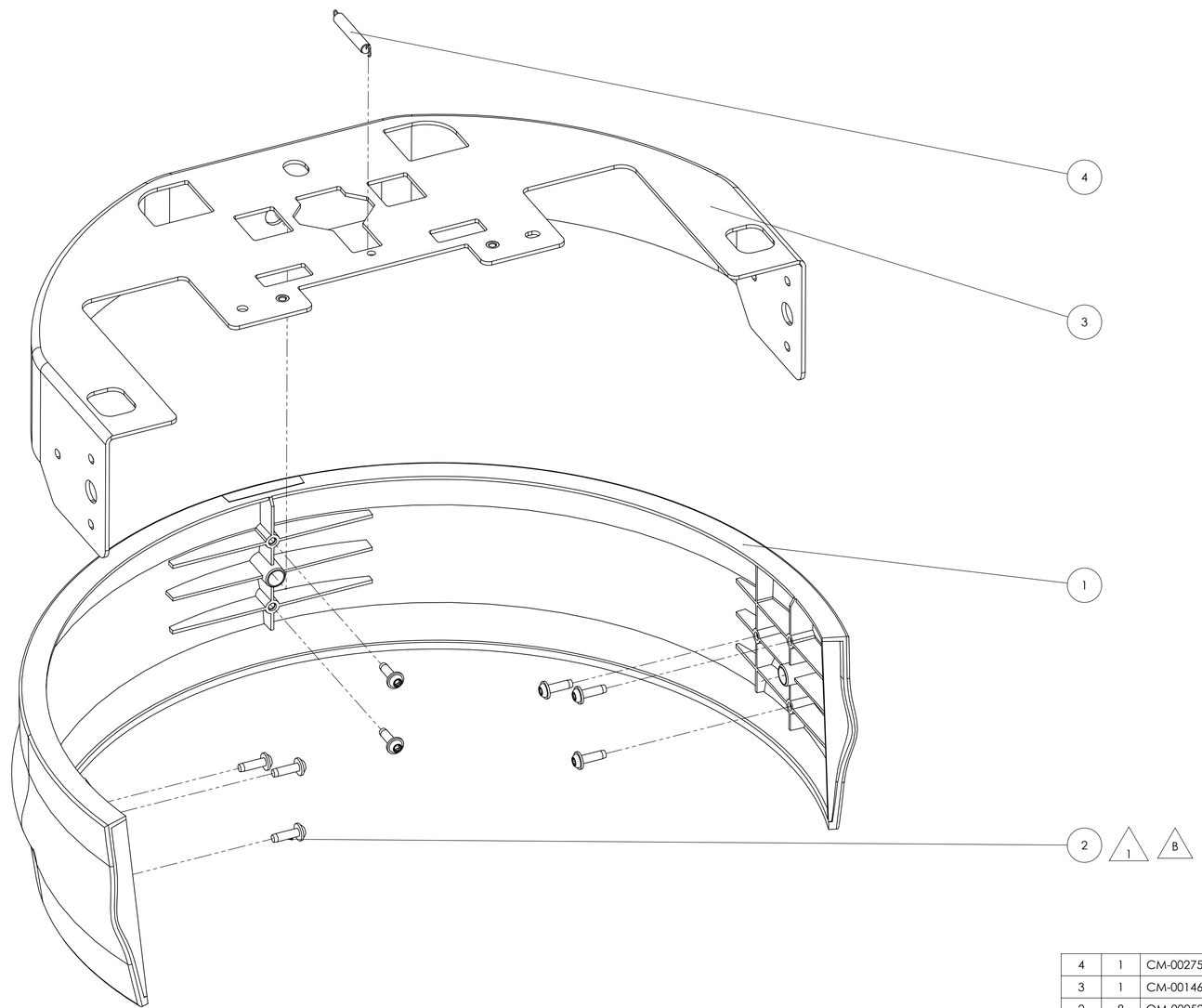

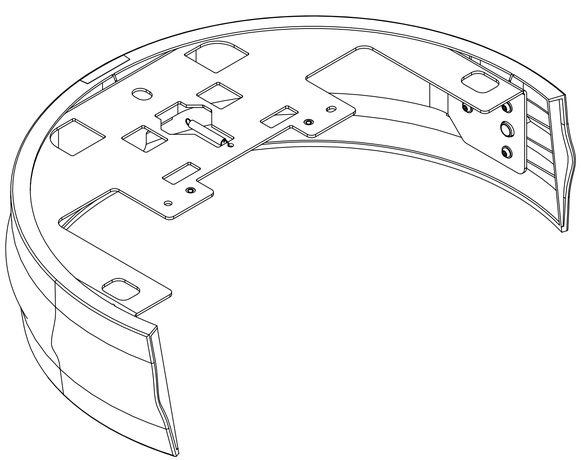

B

ITEM NO	QTY	PART NUMBER	DESCRIPTION
4	1	CM-00275	SPRING,EXTENSION,BUMPER,FRONT
3	1	CM-00146	BASE BUMPER FRAME SUBASSY
2	8	OM-00052	SCREW,K30X10,PT WASHER HEAD
1	1	CM-00150	BEZEL,BASE BUMPER

BILL OF MATERIALS

UNLESS OTHERWISE SPECIFIED, DIMENSIONS ARE IN MILLIMETERS
INTERPRET DIMENSIONS AND TOLERANCES PER ASME Y14.5M
TRAILING ZEROS DENOTE TOLERANCE

DO NOT SCALE DRAWING

THIRD ANGLE PROJECTION

TOLERANCES
X = ± 0.5
X.X = ± 0.25
X.XX = ± 0.13
ANGLES = ± 1°
UNLESS OTHERWISE SPECIFIED

	APPROVED	DATE
DRAWN BY	P AUMANN	04APR17
DESIGNED BY	J BECK	04APR17

MAYFIELD ROBOTICS
400 CONVENTION WAY
REDWOOD CITY, CA 94063

ASSY, BASE BUMPER

DWG NUMBER **SA-00044** REV **B**

SIZE **D** SCALE 1:2 SHEET 1 of 1