REVISION TABLE			
REVISION	DESCRIPTION	DATE	APPROVED
B	RELEASE TO PRODUCTION	07AUG17	J UMHOEFER
C	UPDATE PER DFM REVIEW	11SEP17	J UMHOEFER
C01	CORRECT WIRING AT P2 & P3	13SEP17	J UMHOEFER
C02	CHANGE CABLE TO 19 GA.	12OCT17	J UMHOEFER
C03	CHANGE WIRE P/N AND COLOR	13OCT17	J UMHOEFER
C04	ADDED NOTE 9	19OCT17	J UMHOEFER
C05	REMOVE MFG FROM ITEM 10	24JAN18	J UMHOEFER
C06	CORRECT P1, P2, & P3 LABEL COLORS	07MAY18	J UMHOEFER
C07	UPDATE INSULATION SPEC (NOTE 7)	09MAY18	J UMHOEFER
C08	ADDED NOISE DAMPENING TAPE (ITEM 11 & NOTE 10)	25MAY18	J UMHOEFER
C09	UPDATED NOTE 10. ADDED TAPE WRAP TERMINATION. ADDED LABEL AND TAPE LOCATION DIMS.	29MAY18	J UMHOEFER

NOTES, UNLESS OTHERWISE SPECIFIED:

1. INTERPRET DRAWING PER ASME Y14.41-2003.
2. WIRE CONDUCTOR MATERIAL: COPPER
3. (1) INDICATES CIRCUIT 1
4. COMPONENTS AND MATERIALS MUST BE RoHS COMPLIANT AND TRACEABILITY OF SUCH MUST BE MADE AVAILABLE UPON REQUEST
5. INDICATED WIRE STRIP LENGTHS ARE FOR REFERENCE ONLY. WIRE STRIP LENGTHS TO BE AS APPROPRIATE FOR INDICATED CONNECTORS
6. WIRE LENGTHS IN BOM TABLE ARE FOR REFERENCE AND DO NOT INCLUDE ALLOWANCE FOR STRIPPED ENDS OR TWIST
7. WIRING INSULATION SHALL BE PVC, TFE, PTFE, FEP, POLYCHLOROPRENE, OR POLYIMIDE IN ACCORDANCE WITH UL WIRE STANDARD WITH VOLTAGE RATING AT LEAST 125 V AND OPERATING TEMP AT LEAST 80 C. CONNECTORS MUST BE RATED V-2 OR BETTER UNDER UL-94.

8. PRINT LABEL AS INDICATED:
   - P1 LABEL TEXT:
     - WH-00112
     - REV. C09
     - CN13
   - P1 LABEL COLOR: YELLOW
   - P2 LABEL TEXT: NONE
   - P2 LABEL COLOR: RED
   - P3 LABEL TEXT: NONE
   - P3 LABEL COLOR: BLUE

9. INSTALL SHIELDING WIRE (ITEM 10) AS DETAILED IN WORK INSTRUCTION FILE000304.

10. WRAP BOTH CABLES WITH PET FLEECE TAPE. (C09)
    - BEGIN WRAP AT P2/P3 CONNECTOR END.
    - COVER TAIL-END OF EACH WRAP WITH A SINGLE LOOP OF TAPE.
    - ADHERE LOOP TO ITSELF (ADHESIVE-SIDE TO ADHESIVE-SIDE).
    - WRAP PITCH: 10± 2MM
    - MAX OD OF EACH WRAPPED CABLE: 5MM
    - TAPE LENGTH PER WRAP: 270MM
    - TAPE LENGTH PER WRAP TERMINATION: 30MM

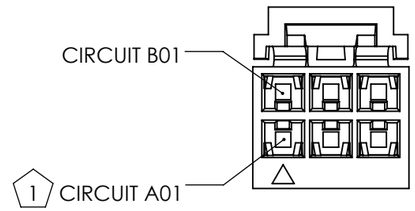

(4) CONN. 2 AND 3 CIRCUITS

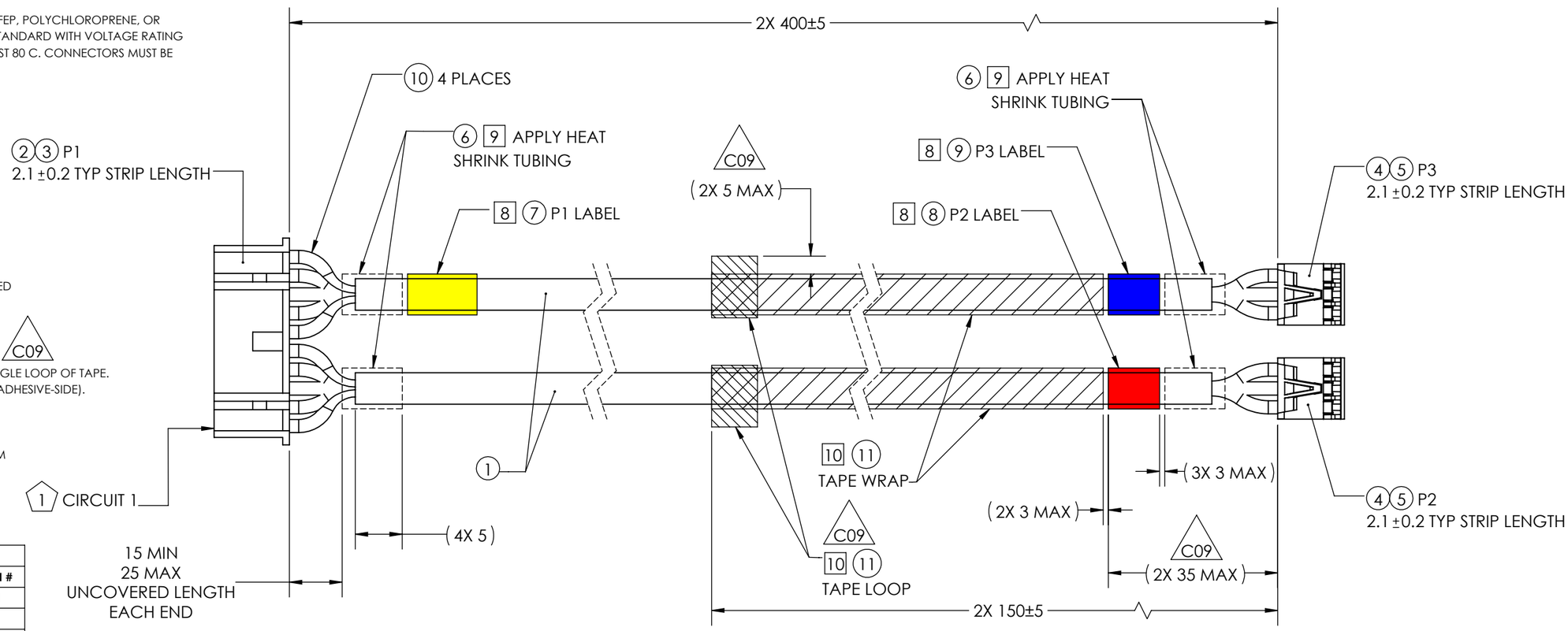

PIN ARRANGEMENT TABLE			
WIRE #	COLOR	P 1 PIN #	P2 PIN #
1	BLK	1	A01
2	RED	2	B01
3	YEL	3	A02
4	WHT	4	B02
5	SHIELD (ORG, 28AWG)	5	A03
NOT USED			B03
			P3 PIN #
6	BLK	6	A01
7	RED	7	B01
8	YEL	8	A02
9	WHT	9	B02
10	SHIELD (ORG, 28AWG)	10	A03
NOT USED			B03

ITEM NO.	P/N	MFG	MFG P/N	DESCRIPTION	QTY	UOM
1	OE-00338	TENSILITY	30-00491	CABLE, 4-CONDUCTOR 28AWG SHIELDED	AR	mm
2	OE-00317			CONNECTOR HOUSING, JST-PA 10POS	1	EACH
3	OE-00295			CONN TERM PHD CRIMP 24-28AWG TIN (JST-PA)	10	EACH
4	OE-00311			CONNECTOR HOUSING, AMPHENOL MINITEK MEZZSELECT 6POS 2MM, DUAL ROW	2	EACH
5	OE-00312			CONN TERM FEMALE 26-30AWG CRIMP (MINITEK MEZZSELECT)	10	EACH
6	CN-00031			HEAT SHRINK TUBING, 1.5MM RECOVERED ID	40	MM
7	CN-00029			LABEL, HEAT SHRINK, YELLOW	1	EACH
8	CN-00026			LABEL, HEAT SHRINK, RED	1	EACH
9	CN-00027			LABEL, HEAT SHRINK, BLUE	1	EACH
10	OE-00339			WIRE, 28 GA., 19 STRAND, ORANGE	AR	mm
11	CN-00040			TAPE, NOISE DAMPENING	600	mm

UNLESS OTHERWISE SPECIFIED, DIMENSIONS ARE IN MILLIMETERS
INTERPRET DIMENSIONS AND TOLERANCES PER ASME Y14.5M
TRAILING ZEROS DENOTE TOLERANCE
DO NOT SCALE DRAWING
THIRD ANGLE PROJECTION

TOLERANCES
X = ± 0.5
X.X = ± 0.25
X.XX= ± 0.13
ANGLES = ± 1°
UNLESS OTHERWISE SPECIFIED

	APPROVED	DATE
DRAWN BY	E SATHER	11JUL17
DESIGNED BY		

MAYFIELD ROBOTICS
400 CONVENTION WAY
REDWOOD CITY, CA 94063

CABLE, MICROPHONES, REAR

DWG NUMBER **WH-00112** REV **C09**
SIZE **B** SCALE 2:1 SHEET 1 of 1