REVISION TABLE			
REVISION	DESCRIPTION	DATE	APPROVED
B	RELEASE TO PRODUCTION	07AUG17	J UMHOEFER
C	UPDATED WIRE TWIST SPECIFICATION	04SEPT17	J UMHOEFER
C01	UPDATE TWIST COUNT	22NOV17	J UMHOEFER
C02	UPDATE TWIST TOLERANCE	29NOV17	J UMHOEFER

NOTES, UNLESS OTHERWISE SPECIFIED:

1. INTERPRET DRAWING PER ASME Y14.41-2003.
2. WIRE CONDUCTOR MATERIAL: COPPER
3. WIRE INSULATION: PTFE
4. WIRE STRANDING: 19/38
5. (1) LOCATION INDICATED IS CIRCUIT 1
5. COMPONENTS AND MATERIALS MUST BE RoHS COMPLIANT AND TRACEABILITY OF SUCH MUST BE MADE AVAILABLE UPON REQUEST
6. INDICATED WIRE STRIP LENGTHS ARE FOR REFERENCE ONLY. WIRE STRIP LENGTHS TO BE AS APPROPRIATE FOR INDICATED CONNECTORS
7. WIRE LENGTHS IN BOM TABLE ARE FOR REFERENCE AND DO NOT INCLUDE ALLOWANCE FOR STRIPPED ENDS OR TWIST
8. WIRING AND CONNECTORS MUST BE UL RECOGNIZED UNDER ECBT2. CONNECTORS MUST BE RATED V-2 OR BETTER UNDER UL-94

[9.] PRINT LABEL AS INDICATED:
P1 LABEL TEXT:
WH-00083
REV. C02
J3
P1 LABEL COLOR: WHITE

[10.] TOTAL TWISTS TOLERANCE IS +/-10% UNLESS OTHERWISE SPECIFIED. TPM IS TWISTS PER METER. TPM VALUES FOR REFERENCE ONLY.

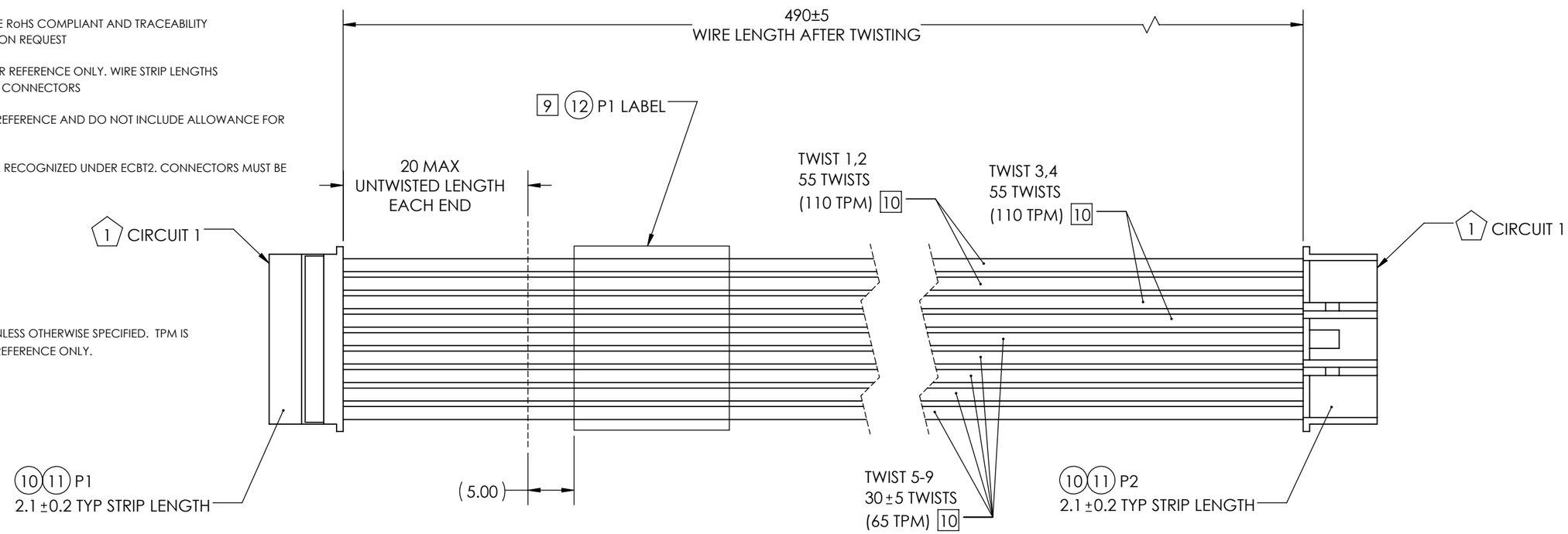

ITEM NO.	P/N	DESCRIPTION	QTY	UOM
1	OE-00268	WIRE, 26AWG 19/38 STRANDED COPPER, RED PTFE	AR	mm
2	OE-00267	WIRE, 26AWG 19/38 STRANDED COPPER, BLACK PTFE	AR	mm
3	OE-00270	WIRE, 26AWG 19/38 STRANDED COPPER, YELLOW PTFE	AR	mm
4	OE-00267	WIRE, 26AWG 19/38 STRANDED COPPER, BLACK PTFE	AR	mm
5	OE-00267	WIRE, 26AWG 19/38 STRANDED COPPER, BLACK PTFE	AR	mm
6	OE-00273	WIRE, 26AWG 19/38 STRANDED COPPER, GRAY PTFE	AR	mm
7	OE-00272	WIRE, 26AWG 19/38 STRANDED COPPER, WHITE PTFE	AR	mm
8	OE-00271	WIRE, 26AWG 19/38 STRANDED COPPER, VIOLET PTFE	AR	mm
9	OE-00274	WIRE, 26AWG 19/38 STRANDED COPPER, BLUE PTFE	AR	mm
10	OE-00293	CONNECTOR HOUSING, JST-PA 9POS	2	EACH
11	OE-00295	CONN TERM PHD CRIMP 24-28AWG TIN (JST-PA)	18	EACH
12	CN-00025	LABEL, HEAT SHRINK, WHITE	1	EACH

PIN ARRANGEMENT TABLE			
WIRE #	COLOR	P1 PIN #	P 2 PIN #
1	RED	1	1
2	BLACK	2	2
3	YELLOW	3	3
4	BLACK	4	4
5	BLACK	5	5
6	GRAY	6	6
7	WHITE	7	7
8	VIOLET	8	8
9	BLUE	9	9

UNLESS OTHERWISE SPECIFIED, DIMENSIONS ARE IN
MILLIMETERS
INTERPRET DIMENSIONS AND TOLERANCES PER ASME Y14.5M
TRAILING ZEROS DENOTE TOLERANCE

DO NOT SCALE DRAWING

THIRD ANGLE PROJECTION

TOLERANCES
X = ± 0.5
X.X = ± 0.25
X.XX = ± 0.13
ANGLES = ± 1°
UNLESS OTHERWISE SPECIFIED

	APPROVED	DATE
DRAWN BY	E SATHER	11JUL17
DESIGNED BY		

MAYFIELD ROBOTICS
400 CONVENTION WAY
REDWOOD CITY, CA 94063

CABLE, HEAD POWER AND COMMS

DWG NUMBER **WH-00083** REV **C02**
SIZE **B** SCALE 2:1 SHEET 1 of 1