REVISION TABLE				
ECO	REVISION	DESCRIPTION	DATE	APPROVED
	B	INITIAL RELEASE	28MAR18	J UMHOEFER

NOTES, UNLESS OTHERWISE SPECIFIED:

1. REFER TO BOM FOR COMPLETE AND CURRENT LIST OF MATERIALS. VENDOR NAME AND VENDOR PN ARE FOR REFERENCE ONLY.
2. COMPONENTS SHOWN WITHOUT ITEM NUMBERS ARE FOR REFERENCE ONLY AND REPORT TO UPPER LEVEL ASSEMBLIES.
3. SOME HARDWARE NOT SHOWN FOR CLARITY.
4. COMPONENTS MUST BE RoHS COMPLIANT AND TRACEABILITY OF SUCH MUST BE MADE AVAILABLE UPON REQUEST.
5. FOLLOW MANUFACTURER'S ASSEMBLY INSTRUCTIONS AND ESD HANDLING PRACTICES.
6. THREADED FASTENERS SHALL BE INSTALLED IN ACCORDANCE WITH MANUFACTURERS TORQUE SPECIFICATION UNLESS OTHERWISE SPECIFIED. INSTALLATION TORQUE TO BE:

   1 10±1 N-m (89±9 lb-in).

7. REFER TO MAYFIELD ROBOTICS QA-00025 FOR GENERAL INSPECTION REQUIREMENTS AND SPECIFIC REQUIREMENTS FOR DIMENSIONS INCLUDING "CC-", AN OVAL, AND/OR OTHER MODIFIERS.
8. FINAL ASSEMBLY METHOD TO BE REVIEWED AND APPROVED IN WRITING BY MAYFIELD ROBOTICS.

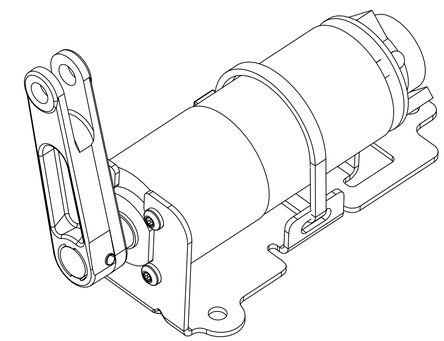

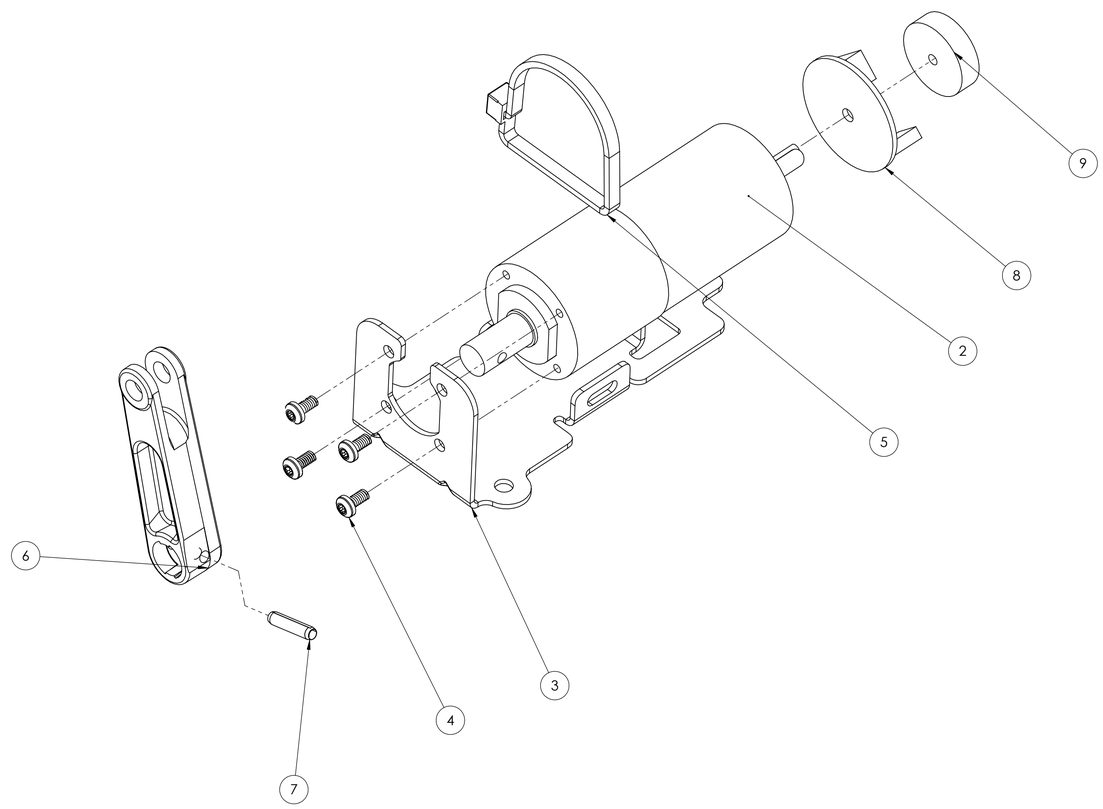

ITEM NO	QTY	PART NUMBER	DESCRIPTION
9	1	OM-00125	MAGNET, ENCODER
8	1	OM-00087	ENCODER
7	1	OM-00130	PIN, SPRING
6	1	CM-00303	CRANK,PINNED
5	1	OM-00118	CABLE,TIE,2.5MMx120MM
4	4	OM-00119	SCREW, M2x4, 6IP TORX PAN HEAD
3	1	CM-00355	BRACKET,MOTOR,DOF,HEAD
2	1	OM-00107	HENKWELL PK22G-9120-62, CROSSDRILLED SHAFT
1	1	WH-00018	CABLE, MOTOR, TILT

BILL OF MATERIALS

UNLESS OTHERWISE SPECIFIED, DIMENSIONS ARE IN MILLIMETERS
INTERPRET DIMENSIONS AND TOLERANCES PER ASME Y14.5M
TRAILING ZEROS DENOTE TOLERANCE

DO NOT SCALE DRAWING

THIRD ANGLE PROJECTION

TOLERANCES
X = ±0.5
X.X = ±0.25
X.XX = ±0.13
ANGLES = ±1°
UNLESS OTHERWISE SPECIFIED

	APPROVED	DATE
DRAWN BY	M DENG	28MAR18
DESIGNED BY	M DENG	28MAR18

MAYFIELD ROBOTICS
400 CONVENTION WAY
REDWOOD CITY, CA 94063

SUBASSEMBLY, MOTOR, TILT

DWG NUMBER **SA-00077** REV **B**

SIZE **D** SCALE 2:1 SHEET 1 of 1