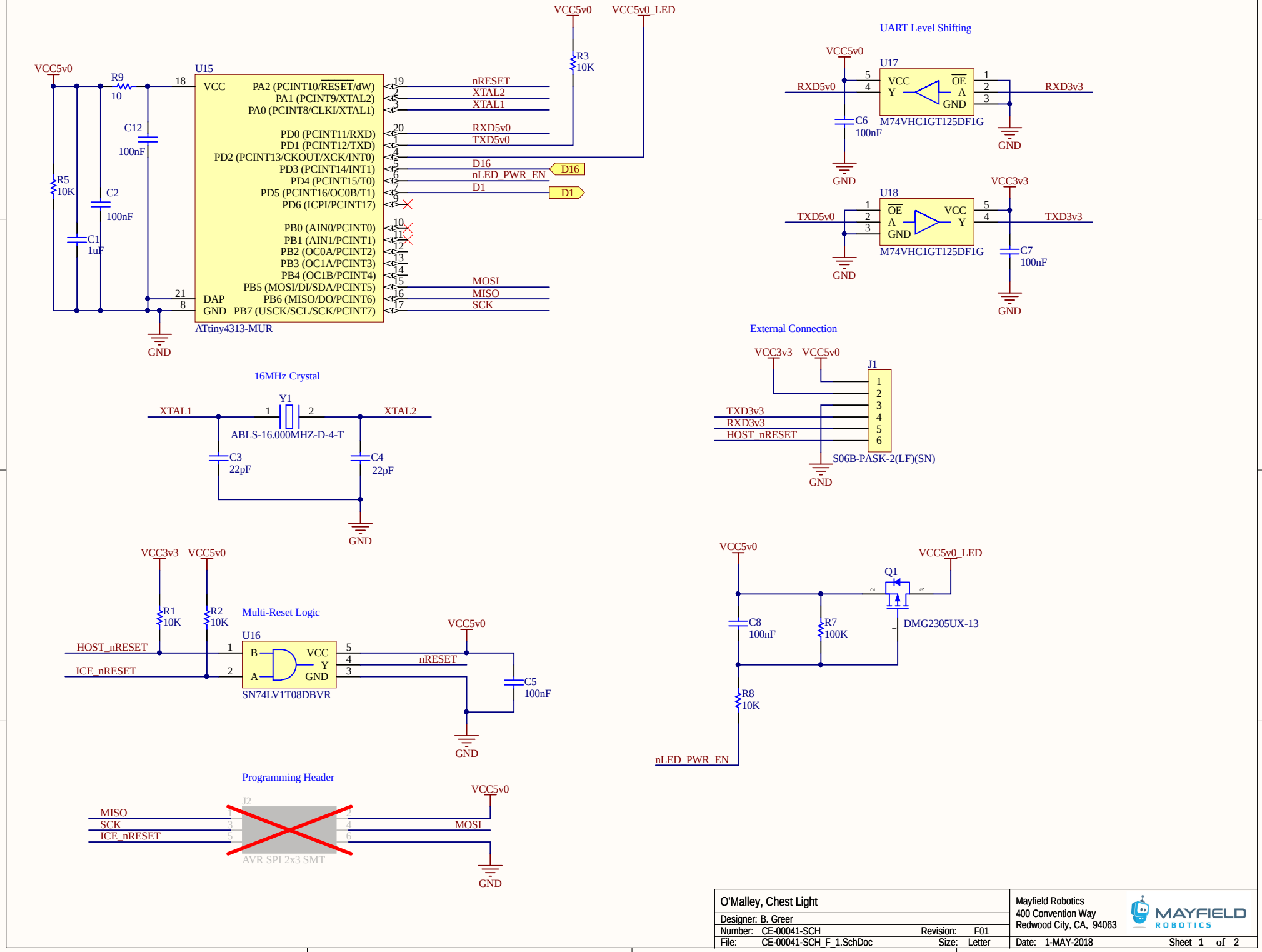
VCC5v0
VCC5v0_LED
R3
10K
U15
R9
10
C12
100nF
R5
10K
C2
100nF
C1
1uF
VCC
DAP
GND
PA2 (PCINT10/RESET/dW)
PA1 (PCINT9/XTAL2)
PA0 (PCINT8/CLKI/XTAL1)
PD0 (PCINT11/RXD)
PD1 (PCINT12/TXD)
PD2 (PCINT13/CKOUT/XCK/INT0)
PD3 (PCINT14/INT1)
PD4 (PCINT15/T0)
PD5 (PCINT16/OC0B/T1)
PD6 (ICPI/PCINT17)
PB0 (AIN0/PCINT0)
PB1 (AIN1/PCINT1)
PB2 (OC0A/PCINT2)
PB3 (OC1A/PCINT3)
PB4 (OC1B/PCINT4)
PB5 (MOSI/DI/SDA/PCINT5)
PB6 (MISO/DO/PCINT6)
PB7 (USCK/SCL/SCK/PCINT7)
nRESET
XTAL2
XTAL1
RXD5v0
TXD5v0
D16
nLED_PWR_EN
D1
MOSI
MISO
SCK
ATtiny4313-MUR
UART Level Shifting
U17
M74VHC1GT125DF1G
RXD5v0
RXD3v3
C6
100nF
U18
TXD5v0
TXD3v3
VCC3v3
C7
100nF
External Connection
J1
S06B-PASK-2(LF)(SN)
16MHz Crystal
Y1
ABLS-16.000MHZ-D-4-T
C3
22pF
C4
22pF
R1
10K
R2
10K
Multi-Reset Logic
U16
HOST_nRESET
ICE_nRESET
SN74LV1T08DBVR
C5
100nF
Q1
DMG2305UX-13
C8
100nF
R7
100K
R8
10K
Programming Header
J2
AVR SPI 2x3 SMT
O'Malley, Chest Light
Designer: B. Greer
Number: CE-00041-SCH
Revision: F01
File: CE-00041-SCH_F_1.SchDoc
Size: Letter
Mayfield Robotics
400 Convention Way
Redwood City, CA, 94063
MAYFIELD ROBOTICS
Date: 1-MAY-2018
Sheet 1 of 2

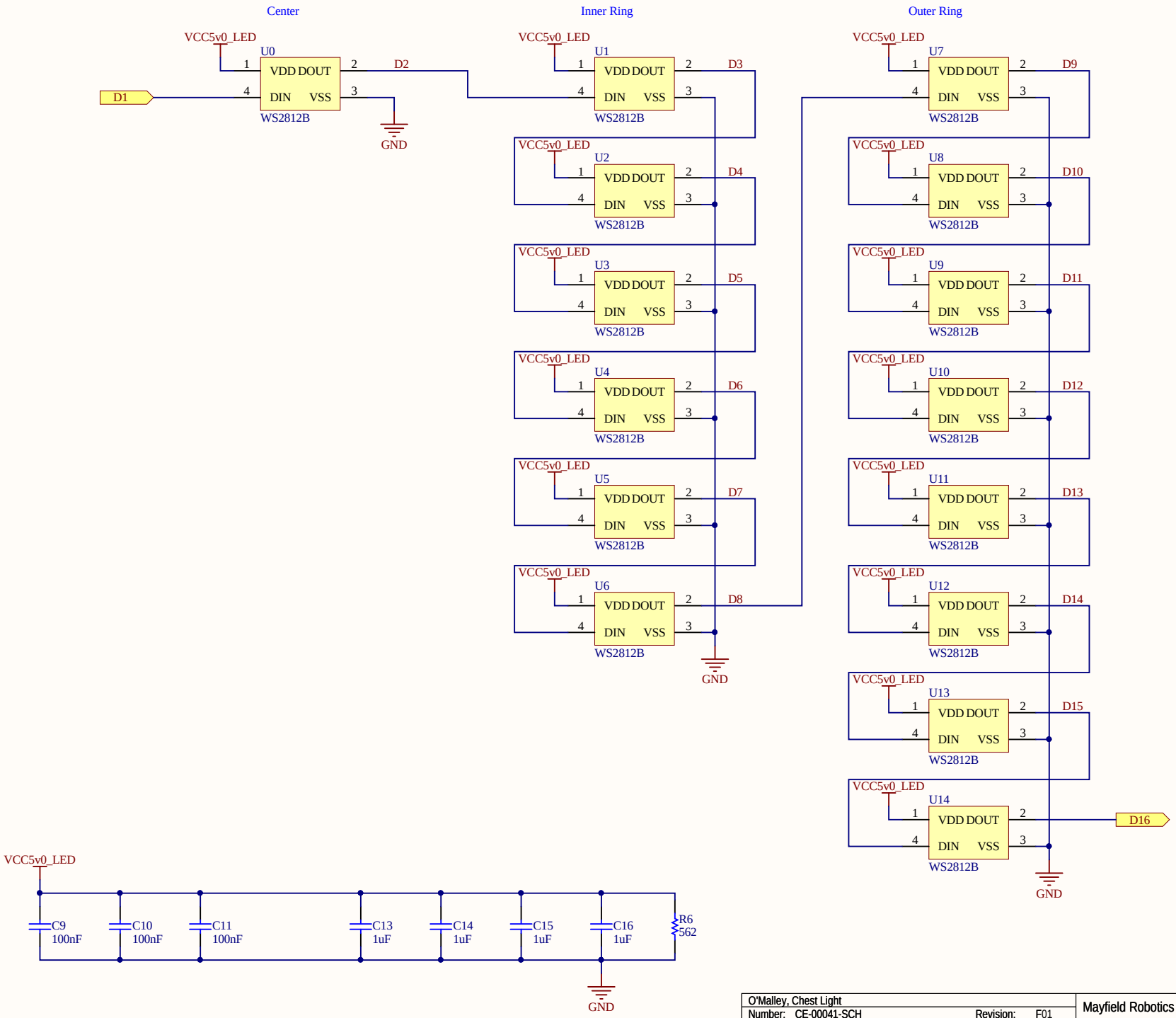

O'Malley, Chest Light			Mayfield Robotics
Number: CE-00041-SCH	Revision: F01		
File: CE-00041-SCH_F_2.SchDoc	Size: Letter	Date: 1-MAY-2018	Sheet 2 of 2