Detecting Patterns of Somatic Structural Variation Using Multi-Channel Latent Dirichlet Allocation

Christoffer Jensen, 202007962

June 14, 2025

Supervisors: Jens Ledet Jensen og Søren Besenbacher
Co-supervisor: Carmen Oroperv

1 Introduction

All cancers are the product of a series of endogenous and/or exogenous mutational processes, each with their own mutational signature [3]. The somatic mutations present in a cancer genome represent the cumulative results of these individual processes [20]. The introduction of whole-genome sequencing (WGS) and whole-exome sequencing (WES) has allowed for detailed analysis of the somatic mutations present in cancer genomes and paved the way for projects trying to decipher their underlying mutational signatures [13]. Previously, projects have focused mostly on deciphering single-base substitution signatures (SBSs) or double-base substitution signatures (DBSs) [13]. However, other types of somatic mutations such as insertion-deletion (indel) or structural variation (SV) are important pieces of the puzzle in understanding the underlying mutational signatures in cancer genomes [14]. A single-base substitution mutation is defined through the specific point mutation it causes (e.g. C>T). There are six basic somatic substitutions (i.e. C>A, C>G, C>T, T>A, T>C, T>G) [2]. When deciphering single-base substitution signatures it is common practice to include the flanking sequence when defining the substitutions (e.g. ACA>ATA), yielding 96 different types. SV mutations are characterized by a genomic rearrangement which either duplicates, deletes or inverses chromosomal material on a scale ranging from kilobases to entire chromosomes [14]. Since an SV mutation causes a rearrangement over a larger sequence of the genome, it is not possible to define it through a point mutation. Instead, we define it through the value of some observed features such as SV class (i.e. deletion, duplication, inversion), length, GC content, etc. The types of SV mutations are then given by all combinations of the feature values. It is common practice to discretize the continuous features in order to obtain a finite number of SV mutations (e.g. discretize length into four intervals: 1-10kb, 10-100kb, 1-10Mb, >10Mb) [13, 14].

Previous studies have often relied on non-negative matrix factorization (NMF) to conduct mutational signature analysis [10, 11, 12, 17]. Such an analysis is often based on a dataset containing the somatic mutations found in cancer patients (i.e. samples) through WGS. NMF then represents these samples through a count matrix. In this matrix, each row represents a sample and each column represents a mutation type. When deciphering single-base substitutions signatures, this yields a count matrix with 96 columns. Each entry in the matrix then represents the number of mutations of the corresponding type in a given sample. NMF then factorizes the count matrix into two non-negative matrices; one indicating the estimated signatures and one indicating the signature expression across samples. However, the applicability of this approach is limited in the context of SV mutations. We see that the number of possible SV types increases exponentially as the number of features is increased. As a consequence, the sparsity of the count matrix increases which in turn makes it difficult to carry out an NMF based analysis. As a result, previous studies deciphering mutational signatures from SV mutations have mostly included a small number of features [14]. However, limiting the number of features will also limit the input information regarding the underlying mutational processes.

To address this limitation, we propose a multi-channel latent Dirichlet allocation (MCLDA) model [16]. This is a probabilistic latent variable model which rather than relying on a count matrix assumes that each mutation is generated through a latent probabilistic process. The model parameters capture the underlying mutational signatures and their expression in each of the samples in a similar fashion to NMF. In this paper, we evaluate the model on SV mutations from the Pan-Cancer Analysis of Whole Genomes (PCAWG) [1]. The structure of this paper is as follows. Section 2 describes the proposed MCLDA model. Section 3 presents the experimental results. Finally, section 4 concludes the article with a summary of the results and a brief discussion.

2 Multi-channel latent Dirichlet allocation (MCLDA)

The MCLDA model introduced in this paper is inspired by the model in [16] which in turn is based on Latent Dirichlet Allocation (LDA), i.e. a Bayesian probabilistic topic model [9]. Probabilistic topic models are a suite of algorithms which original goal was to annotate latent topics in documents by analyzing the words present in the documents [8]. Topic models do not require any prior annotations or labeling of the documents, as they find the topics solely based on the texts. To present the structure of MCLDA, we will first give a short description of LDA in the context of topic detection and then provide a translation to the context of mutational signatures.

2.1 LDA

Given M documents, LDA (see figure 1) assumes that each word in the documents is generated through draws from distributions based on latent parameters. It is further assumed that each word is generated independently conditioned on the latent parameters.

If we assume that we have $K \in \mathbb{N}$ possible predefined topics the words in a document m can belong to, then the model defines $\theta_m \in \mathbb{R}_+^K$ as the distribution over the K topics for document m. This means that $(\theta_m)_k$ is the probability that the words in document m belong to topic k. Here, it needs $\sum_{k=1}^K (\theta_m)_k = 1$ for the probability interpretation to be valid. LDA achieves this by modeling θ_m as

$$\theta_m \sim \text{Dirichlet}(\alpha) \quad \text{for} \quad m = 1, \ldots, M$$

where $\alpha \in \mathbb{R}_+^K$ is a fixed prior hyperparameter and M is the total number of documents.

Assuming that document m contains N_m words, then for each word $n = 1, \ldots, N_m$ a specific topic $z_{mn} \in \{1, 2, \ldots, K\}$ is drawn based on θ_m. This is defined as

$$z_{mn} \sim \text{Multinomial}(\theta_m) \quad \text{for} \quad m = 1, \ldots, M, \quad n = 1, \ldots, N_m$$

The above notation indicates that z_{mn} is a draw from a K-dimensional multinomial distribution with θ_m topic probabilities. The model further assumes that each topic $k = 1, \ldots, K$ has a corresponding distribution $\phi_k \in \mathbb{R}_+^V$ over all the V possible words, that is $(\phi_k)_n$ is the probability of a word belonging to topic k to be word $n \in \{1, \ldots, V\}$. For topic $k = 1, \ldots, K$ this is defined as

$$\phi_k \sim \text{Dirichlet}(\beta)$$

where $\beta \in \mathbb{R}_+^V$ is a fixed prior hyperparameter. The use of the Dirichlet distribution again allows us to interpret $(\phi_k)_i$ as the probability of word i in topic k.

Finally, each word in the document is defined as a draw from a multinomial distribution based on its assigned topic's distribution over the possible words

$$w_{mn} \sim \text{Multinomial}(\phi_{z_{mn}}) \quad \text{for} \quad m = 1, \ldots, M, \quad n = 1, \ldots, N_m$$

where w_{mn} is the n'th word in the m'th document. The LDA model assumes that each word in the document m is generated independently when conditioned on the topic distribution θ_m and $\boldsymbol{\phi} = \{\phi_1, \ldots, \phi_K\}$.

In order to transfer the model to the context of SV mutational signatures, we can change the wording from "documents", "topics", and "words" to "patients", "signatures" and "mutations", respectively. The translation of "document" and "topic" into "patient" and "signature" is straightforward. However, the translation of "word" into "mutation" requires an extension of the LDA model definition. This is caused by the LDA model assumption that each word only has one value, i.e. the word itself. However, SV mutations consist of observations from multiple different features and thereby contain multiple values. The current version of the LDA model is therefore not able to capture the structure of SV mutations and an extended version is needed to transfer LDA to the domain of SV mutations. Here, our proposed MCLDA model introduces exactly such an extension. In the following section, we will describe the proposed MCLDA model in the context of SV mutations.

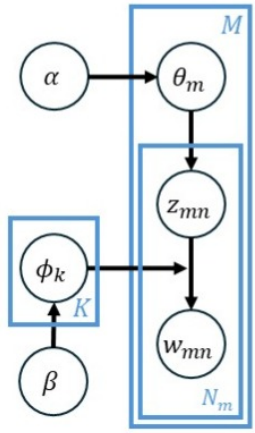

Figure 1: DAG showing interaction of parameters in the LDA model.

2.2 MCLDA

Given M patients, MCLDA (see figure 2) assumes, similar to LDA, that each mutation for each patient is generated through draws from distributions based on latent variables and that each mutation is generated independently conditioned on these latent parameters. Additionally, MCLDA assumes that each mutation consists of multiple values which are each being generated through the latent process.

For patient m, we define $\theta_m \in \mathbb{R}_+^K$ as a distribution over $K \in \mathbb{N}$ predefined signatures, that is $(\theta_m)_k$ is the probability that the mutations in patient m belong to mutational signature k. Again, we need $\sum_{k=1}^K (\theta_m)_k = 1$ for the probability interpretation to be valid. To achieve this we define

$$\theta_m \sim \text{Dirichlet}(\alpha) \quad \text{for} \quad m = 1, \ldots, M$$

where $\alpha \in \mathbb{R}_+^K$ is a fixed prior hyperparameter and M is the total number of patients.

Assuming that patient m has N_m mutations, MCLDA assigns a signature $z_{mn} \in \{1, \ldots, K\}$ for each mutation $n = 1, \ldots, N_m$ based on the corresponding patient's distribution over signatures θ_m. This is defined as

$$z_{mn} \sim \text{Multinomial}(\theta_m) \quad \text{for} \quad m = 1, \ldots, M, \quad n = 1, \ldots, N_m.$$

To accommodate the multiple feature structure of SV mutations, MCLDA defines a distribution $\phi_k^{(c)}$ for signature $k = 1, \ldots, K$ over all the possible values V_c of feature $c = 1, \ldots, C$, where C is the total number of features. This is defined as

$$\phi_k^{(c)} \sim \text{Dirichlet}(\beta^{(c)}) \quad \text{for} \quad k = 1, \ldots, K, \quad c = 1, \ldots, C$$

where $\beta^{(c)} \in \mathbb{R}_+^{V_c}$ is a fixed prior hyperparameter. Again, the Dirichlet distribution allows us to interpret the entries of $\phi_k^{(c)}$ as probabilities. Here, $(\phi_k^{(c)})_n$ indicates the probability of seeing value $n \in \{1, \ldots, V_c\}$ for feature c in a mutation caused by the mutational process corresponding to mutational signature k.

Finally, the observation for each combination of feature, mutation, and patient is drawn based on the mutation's assigned signature's distribution over the possible value for the specific feature

$$w_{mn}^{(c)} \sim \text{Multinomial}(\phi_{z_{mn}}^{(c)}) \quad \text{for} \quad m = 1, \ldots, M, \quad n = 1, \ldots, N_m, \quad c = 1, \ldots, C$$

where $w_{mn}^{(c)}$ is the observation for feature c for the n'th mutation for the m'th patient.

For a given signature $k = 1, \ldots, K$ we see that the latent parameters $\phi_k^{(c)}$, for $c = 1, \ldots, C$, describe the expected values of the feature c for a mutation caused by the mutational process corresponding to mutational signature

k. These $\phi_k^{(c)}$ parameters thereby describe the structure of our estimated mutational signatures. We further see that for a given patient m, the latent parameter θ_m describes the relative contribution of the different mutational signatures. We can thereby get an understanding of the underlying mutational signatures by estimating these latent variables.

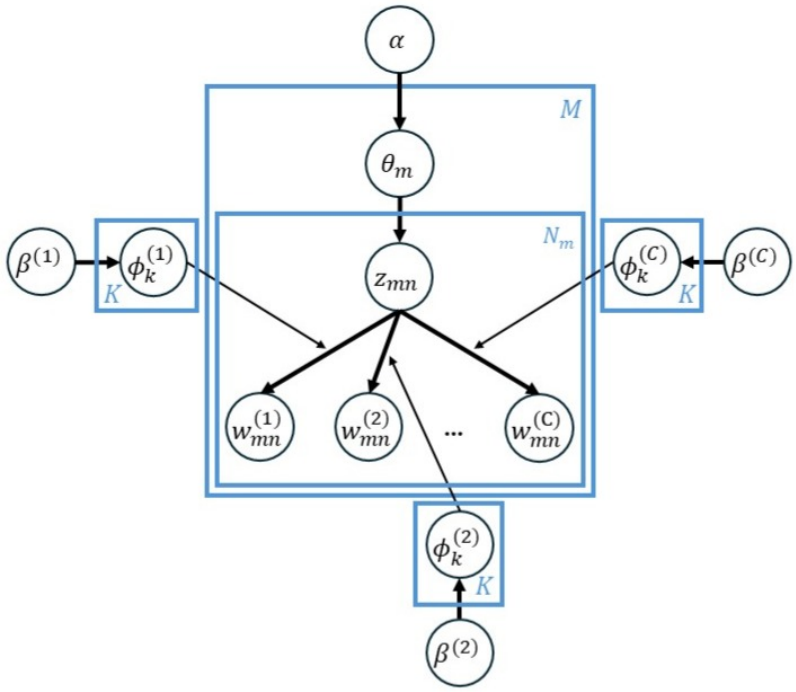

Figure 2: DAG showing interaction of parameters in the MCLDA model.

2.3 Model inference

As mentioned above, we are interested in estimating the latent variables $\phi_k^{(c)}$ and θ_m for $k = 1, \ldots, K$, $c = 1, \ldots C$ and $m = 1, \ldots, M$. In this paper, we will do so by sampling from their joint posterior distribution using the probabilistic programming language Stan. Stan uses a Markov Chain Monte Carlo (MCMC) algorithm to allow sampling of a user defined posterior distribution.

We define the following parameters

$$\begin{aligned}
\boldsymbol{\theta} &= \{\theta_1, \theta_2, \ldots, \theta_M\} \\
\boldsymbol{\beta} &= \{\beta^{(1)}, \beta^{(2)}, \ldots, \beta^{(C)}\} \\
\boldsymbol{\phi} &= \{\phi_k^{(c)}\} \text{ for } k = 1, \ldots, K,\ c = 1, \ldots, C \\
\boldsymbol{w} &= \{w_{mn}^{(c)}\} \text{ for } m = 1, \ldots, M,\ n = 1, \ldots, N_m,\ c = 1, \ldots, C \\
\boldsymbol{w}_{mn} &= \{w_{mn}^{(c)}\} \text{ for } c = 1, \ldots, C
\end{aligned}$$

We are now interested in defining the joint posterior distribution of $\boldsymbol{\theta}$ and $\boldsymbol{\phi}$. Given the structure described in 2.2, we assume that $\boldsymbol{w}_{mn}$, for $m = 1, \ldots, M$ and $n = 1, \ldots, N_m$, are independent when conditioned on $\boldsymbol{\theta}$ and $\boldsymbol{\phi}$. We further assume that $\theta_1, \ldots, \theta_M$ are independent when conditioned on α and that $\phi_k^{(c)}$, for $c = 1, \ldots, C$ and $k = 1, \ldots, K$, are independent given $\boldsymbol{\beta}$. Combined with Bayes' rule, this yields the following posterior

$$\begin{aligned}
P(\boldsymbol{\theta}, \boldsymbol{\phi} | \boldsymbol{w}, \alpha, \boldsymbol{\beta}) &\propto P(\boldsymbol{w} | \boldsymbol{\theta}, \boldsymbol{\phi}) P(\boldsymbol{\theta} | \alpha) P(\boldsymbol{\phi} | \boldsymbol{\beta}) \\
&= \prod_{m=1}^{M} \prod_{n=1}^{N_m} P(\boldsymbol{w}_{mn} | \theta_m, \boldsymbol{\phi}) \times \prod_{m=1}^{M} P(\theta_m | \alpha) \times \prod_{c=1}^{C} \prod_{k=1}^{K} P(\phi_k^{(c)} | \beta^{(c)}).
\end{aligned}$$

In order to define the above posterior in Stan we need a definition of the probability $P(\boldsymbol{w}_{mn}|\theta_m, \boldsymbol{\phi})$. For a given mutation n and patient m, the entries in $\boldsymbol{w}_{mn}$ would be independent if conditioned on z_{mn}. This would allow us to split the probability up into the product of the probability of each of the entries of $\boldsymbol{w}_{mn}$. However, Stan does not allow sampling from discrete variables and therefore we cannot include z_{mn} in the posterior. Nevertheless, we can use the law of total probability to describe $P(\boldsymbol{w}_{mn}|\theta_m, \boldsymbol{\phi})$ in the following manner

$$\begin{aligned} P(\boldsymbol{w}_{mn}|\theta_m, \boldsymbol{\phi}) &= \sum_{k=1}^{K} P(k, \boldsymbol{w}_{mn}|\theta_m, \boldsymbol{\phi}) \\ &= \sum_{k=1}^{K} \left[P(k|\theta_m) \prod_{c=1}^{C} P(w_{mn}^{(c)}|\phi_k^{(c)}) \right]. \end{aligned}$$

This allows us to define the posterior without having to sample from any discrete variables. Using this definition, we get the following posterior

$$P(\boldsymbol{\theta}, \boldsymbol{\phi}|\boldsymbol{w}, \alpha, \boldsymbol{\beta}) \propto \prod_{m=1}^{M} \prod_{n=1}^{N_m} \left[\sum_{k=1}^{K} \left[P(k|\theta_m) \prod_{c=1}^{C} P(w_{mn}^{(c)}|\phi_k^{(c)}) \right] \right] \times \prod_{m=1}^{M} P(\theta_m|\alpha) \times \prod_{c=1}^{C} \prod_{k=1}^{K} P(\phi_k^{(c)}|\beta^{(c)})$$

Using the definition of the different parameters' distributions from 2.2 yields the following

$$\begin{aligned} P(\boldsymbol{\theta}, \boldsymbol{\phi}|\boldsymbol{w}, \alpha, \boldsymbol{\beta}) \propto & \prod_{m=1}^{M} \prod_{n=1}^{N_m} \left[\sum_{k=1}^{K} \left[\text{Multinomial}(k|\theta_m) \times \prod_{c=1}^{C} \text{Multinomial}(w_{mn}^{(c)}|\phi_k^{(c)}) \right] \right] \\ & \times \prod_{m=1}^{M} \text{Dirichlet}(\theta_m|\alpha) \times \prod_{c=1}^{C} \prod_{k=1}^{K} \text{Dirichlet}(\phi_k^{(c)}|\beta^c) \end{aligned}$$

3 Results

In this section, we will first describe the data and data preparation process which precede the model fit. Next, we will give a summary of the actual model fit and finally, we will discuss the results of the fitted model.

3.1 Data and data preparation

To fit and evaluate the model, we use data from the Pan-Cancer Analysis of Whole Genomes (PCAWG) [1]. The data include structural variation mutations from 1780 different cancer samples which each contain between 1 and 1109 mutations. Each mutation has observations from the following six features: structural variational class (i.e. deletion, duplication or inversion), length, telomere distance, GC content, replication time and recombination rate. Besides the already available features, we wanted to include an additional feature indicating whether or not multiple mutations are closely located in the genome. Here, we created a binary cluster variable. This variable takes the value 1 for a mutation if its smallest distance to another mutation in the same chromosome is < 100kb (i.e. clustered), and otherwise it takes the value 0 (i.e. non-clustered). We further removed samples with less than five mutations from the data, since this was assumed to be an insufficient number of mutations to decipher any underlying mutational signatures. This leaves a total of 1482 samples in the dataset.

In 2.2, we assume that the value of each feature of a mutation is drawn from a multinomial distribution. However, in the data we have multiple features with continuous variables (i.e. length, telomere distance, GC content, replication time and recombination rate) which do not correspond to the multinomial structure of the model. We therefore discretize each of these continuous variables into five bins based on their 0.2, 0.4, 0.6 and 0.8 quantiles. The number of bins is chosen as a compromise between wanting to limit the total number of parameters in the model while still including enough parameters for the model to capture interesting underlying structures.

3.2 Hyperparameters

In order to fit the model to the prepared data, we first need to specify the expected number of mutational signatures. This hyperparameter indicates our assumption of the number of underlying mutational processes responsible for creating the observed structural variance mutations in our data. Deciding on a specific number of mutational signatures can be a difficult task. Such a hyperparameter selection would typically rely on either cross-validation or some information criterion, such as AIC, BIC or WAIC. These processes are however often based on the likelihood of the model [18]. Deviations between the model structure and the real mutational processes can lead to an unrealistically high number of signatures being selected as optimal when relying on the likelihood. Take for example a mutational process which has a high deletion rate and a medium inversion rate. The mutations observed in a sample exposed to this mutational process would therefore include both deletions and inversions. Our proposed model assigns each of these mutations their own signature. Given this structure, we would obtain a higher likelihood by defining this mutational process through two signatures (i.e. one with a high rate of inversions and one with a high rate of deletions) rather than through one signature with realistic deletion and inversion rates. Since including more signatures captures the true underlying processes with a higher likelihood, cross-validation might prefer a model with an unrealistically high number of signatures. Information criterion approaches select the optimal number of signatures based on a trade-off between the likelihood and complexity of the model. Since adding signatures will increase the likelihood, through only a relatively small increase of complexity, these methods are also expected to prefer an unrealistically high number of signatures [18]. A possible solution to this issue is to select the number of signatures based on a combination of either cross-validation or an information criterion and the correlation between the different signatures' expression in each sample [18, 4]. If the signatures' expression across the samples are highly correlated, it might indicate that a single mutational process has been split into multiple signatures. An optimal number of signatures is then selected based on a trade-off between achieving a high likelihood while avoiding the signatures' expression being fully correlated.

Following this approach, we defined the vectors $\theta_{(k)} = ((\theta_1)_k, (\theta_2)_k, \ldots, (\theta_M)_k)^\top$ for $k = 1, \ldots, K$ and defined the similarity between two signatures $u, v \in \{1, \ldots, K\}$ as the cosine similarity between $\theta_{(u)}$ and $\theta_{(v)}$. We further implemented a cross-validation procedure and split the mutations for each sample into a training and test set with an 80%/20% split, respectively. We then fitted the model for $K = 3, \ldots 21$ on the training data and calculated the corresponding models' negative log-likelihood on the test data. For each fit, we further found the maximum pairwise similarity between the signatures. The results can be seen in figure 3. The different number of signatures included in the selection process is based on similar previous studies [15, 6]. We see that the negative log-likelihood keeps decreasing as the number of signatures increases. As expected, the cross-validation procedure thereby does not provide an optimal number of signatures on its own. We further see that similarity between the signatures seems to increase as the number of signatures increases, with a relatively high increase when going from 5 to 6, 9 to 10, and 15 to 16 signatures. This indicates that 5, 9 or 15 could be a suitable number of signatures in the model. However, the negative log-likelihood seems to still have a relatively steep negative slope around 5 and 9 signatures, indicating that these might actually not be suitable. Therefore, we choose a model with 15 signatures, which also corresponds well with the results of previous studies [18, 4].

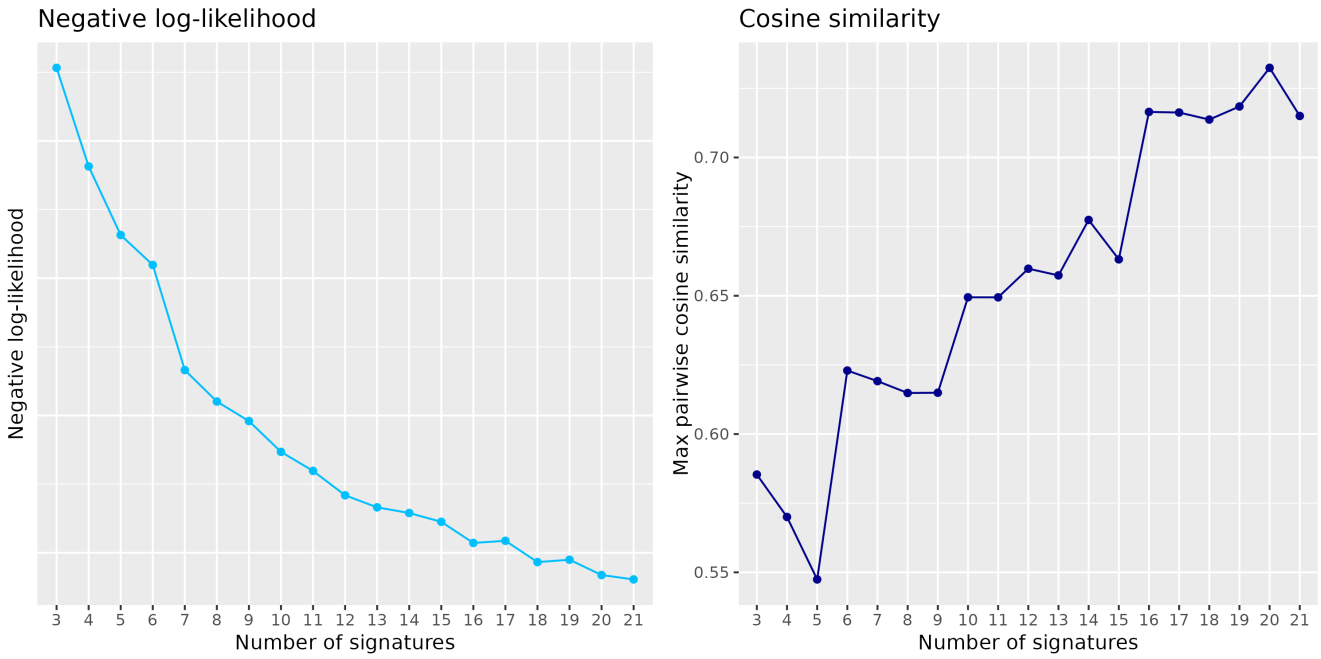

Figure 3: *Showing the two plots used for selecting the number of signatures. The plot on the left shows the negative log-likelihood of the test data for the model fitted with different numbers of signatures. The plot on the right shows the maximum pairwise similarity between the signatures for the model fitted with different numbers of signatures.*

Besides having to decide on a number of signatures, we also need to define the hyperparameters, α and $\boldsymbol{\beta}$, for the prior distributions of the latent parameters $\theta_m \in \boldsymbol{\theta}$ and $\phi_k^{(c)} \in \boldsymbol{\phi}$, respectively. We do not have any prior notions regarding the shape of the mutational signatures or the expression of the signatures across the samples. Therefore, we choose hyperparameters that yield uninformative prior distributions. Given that θ_m and $\phi_k^{(c)}$ follow Dirichlet distributions, we obtain uniform distributions over all possible values of θ_m and $\phi_k^{(c)}$ by defining $\alpha = [1, 1, \ldots 1]^\top \in \mathbb{R}^M$ and $\beta^{(c)} = [1, 1, \ldots, 1]^\top \in \mathbb{R}^{V_c}$ for $c = 1, \ldots, C$.

3.3 Model fit

Having specified the hyperparameters, we can proceed to fitting the model to the data using Stan. As mentioned, Stan uses a Markov Chain Monte Carlo (MCMC) sampler to allow sampling from a user defined posterior. The fitting process in this case thereby consists of sampling values for the latent parameters from their posterior distributions as defined in section 2.3. Given these samples, we then define estimates for the latent parameters as their sample means.

We fitted the model for five out of the seven features in the data. We did not include recombination rate and GC content in the model fit since these are expected to be correlated to telomere distance and replication time, respectively. Including these features would therefore increase the complexity of the model without introducing new information. We defined our posterior in Stan and ran the MCMC sampler for a total of 1700 iterations with a 1000 burn-in iterations, resulting in 700 samples per parameter. Based on evaluation of the $\hat{r}$ values, trace plots and effective sample sizes from the MCMC process, we concluded that the sampling process had successfully converged.

3.4 Model evaluation

From the described model fit, we obtained estimates for the latent parameters $\boldsymbol{\theta}$ and $\boldsymbol{\phi}$. As mentioned, the $\boldsymbol{\phi}$ latent parameters describe the structure of the mutational signatures. The estimated values for these parameters are shown in figure 4. Here, each subplot shows the distribution over the V_c possible values for feature c for a given signature k (i.e. $\phi_k^{(c)}$). We see that even though the $\boldsymbol{\phi}$ was given uniform prior distributions, each signature seems

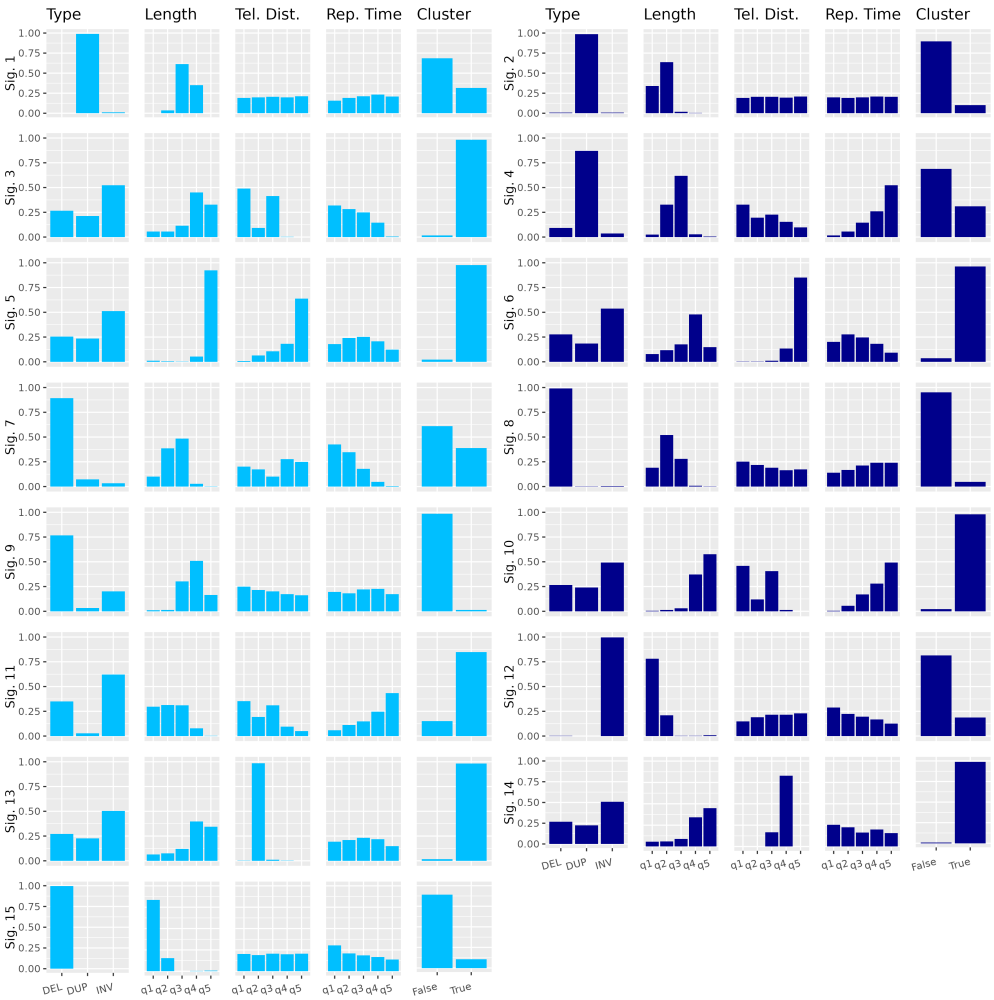

Figure 4: *Showing the estimated structure of the 15 signatures assumed to be underlying the data.*

to be capturing some trends over the possible values for each feature. Only a few signatures seem to have somewhat uniform distributions and only for the features telomere distance and replication time.

Given these estimated signatures, we are interested in investigating whether they actually capture the structure of the real underlying mutational processes. We investigate this by examining whether any of the signatures capture the behavior of well-defined mutational processes such as the consequence of driver mutations in the BRCA1 and BRCA2 genes. The BRCA1 and BRCA2 genes are tumor suppressor genes encoding proteins which are essential in repairing DNA double strand breaks [19]. Driver mutations in these genes lead to repair mechanism deficiencies and cause double strand breaks to be repaired by more error-prone mechanisms [19]. This in turn leads to a buildup of characteristic somatic mutations which have been the focus of many previous studies and are strongly associated with recognized substitution and SV mutational signatures [3, 5, 2, 13]. Since driver mutations in the BRCA1 and BRCA2 genes are known to produce somatic mutations with a characteristic mutational signature, assessing whether any of our estimated signatures capture these mutations could serve as an indication of their validity. We do this by carrying out a two-sided test of the mean expression of signature k, for $k = 1, \ldots, K$, in the samples containing driver mutations in the specified gene (i.e. BRCA1 or BRCA2) versus the samples not containing driver mutations in the gene. In the tests, we further control for each sample's cancer type. This is done to ensure that if a signature is found to have an effect, it actually reflects a deficiency in the specific gene rather than a cancer type specific signature. The PCAWG dataset includes annotations indicating which samples harbor driver mutations in specific genes. The dataset contains driver mutation information from 573 different genes. To expand our evaluation

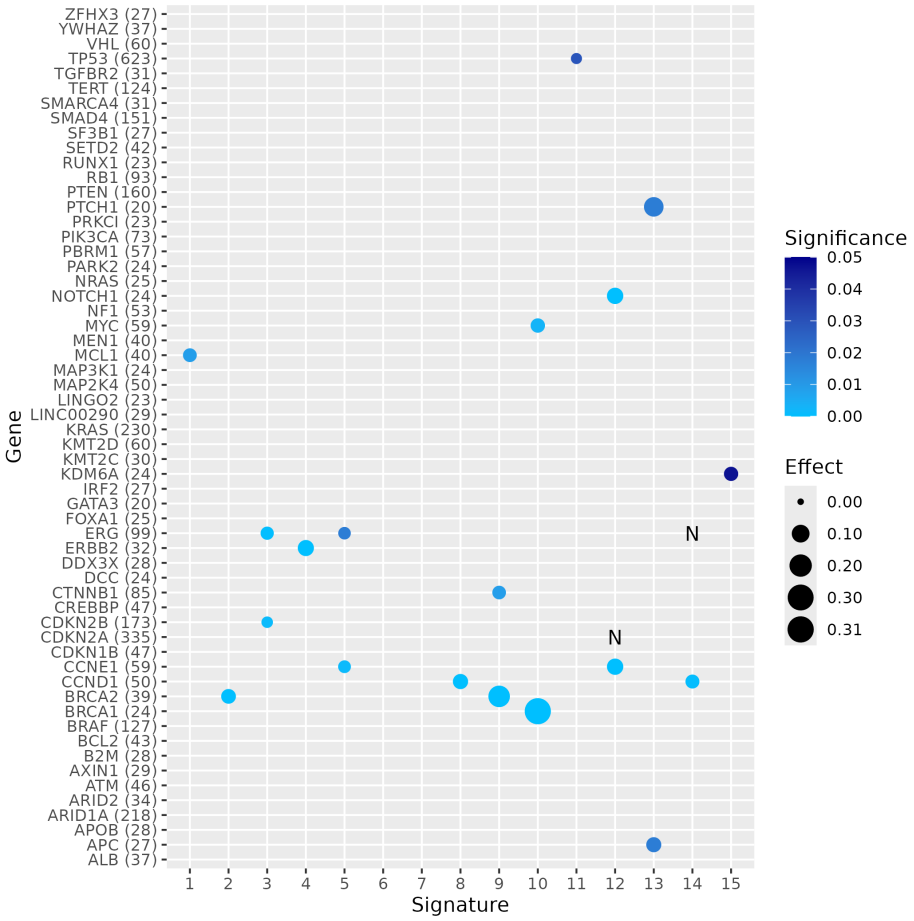

Figure 5: *Each point indicates the result of a two-sided test of the mean expression of the corresponding signature in samples containing driver mutations in the corresponding gene versus samples not containing driver mutations in that gene. Each test is controlled for the samples' cancer types. Only tests with a significant (i.e. p-value < 0.05) positive effect are represented as a point. The size of the point indicates the estimated effect from the test and the color indicates the p-value from the test. A significant positive effect indicates higher expression of the signature in samples harboring driver mutations in the corresponding gene. Tests with a significant negative effect are indicated with an "N".*

of the signatures, we include every gene from the dataset with at least 20 samples harboring driver mutations in that gene. This leads to a very high number of tests which in turn increases the risk of type 1 errors. To lower this risk, the p-values obtained from the test are adjusted in accordance with the Benjamini–Yekutieli (BY) procedure. This procedure controls the false discovery rate (FDR), meaning it allows a low rate of type 1 errors in order to maintain a higher power than more conservative procedures such as the Bonferroni correction, which controls the family-wise error rate (FWER) [7]. The BY procedure is particularly fitting for adjusting these two-sided tests as it allows for dependency between the tests. Our tests are all based on the same samples and are therefore expected to be dependent. The adjusted test results are shown in figure 5. Here, we see that some signatures are expressed significantly higher in patients with driver mutations in specific genes. For example we see that signature 10 is significantly more expressed in samples with a driver mutation in BRCA1 and similar with signatures 2 and 9 for BRCA2. This indicates that these estimated signatures have captured the mutational process associated with BRCA1 and BRCA2 deficiencies. Especially BRCA1 deficiency seems to be strongly captured by signature 10, with the largest effect of all the significant tests (effect: 0.31) and an adjusted p-value ≈ 0 (4.5×10^{-85}).

It is not only the mutational signature of the somatic mutations caused by BRCA1 or BRCA2 deficiency that is well-defined; also the functional consequences of these mutations are well understood. A deficiency in BRCA1 or

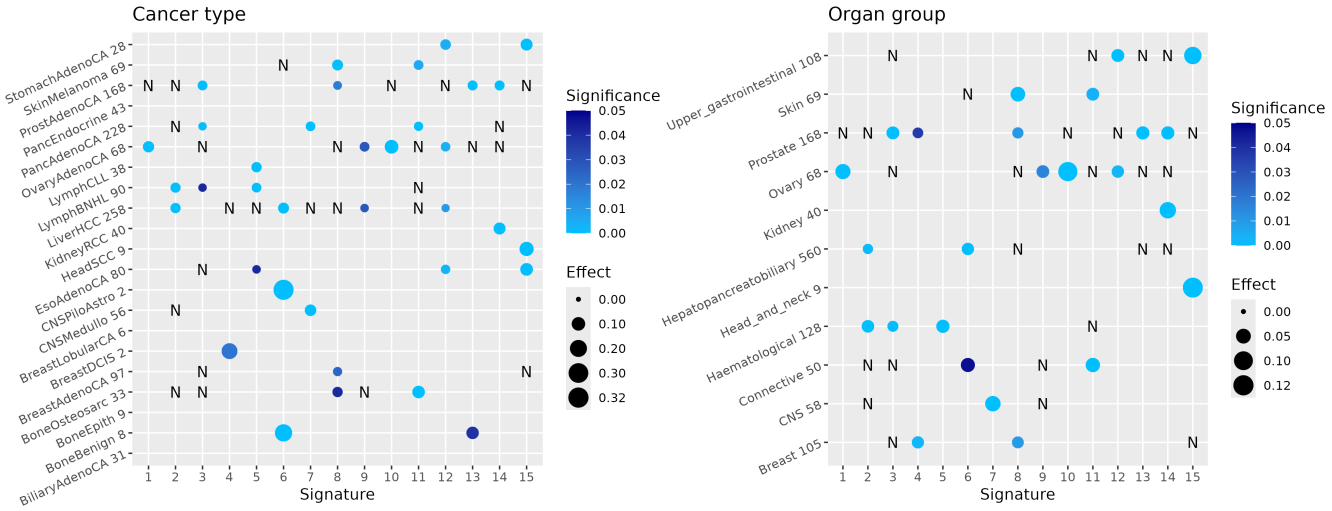

Figure 6: *The plot on the left shows (for each combination of cancer type and signature) the results of a two-sided test for mean expression of the signature in the samples having the cancer type versus the samples not having the cancer type. Only tests with a significant (i.e. p-value < 0.05) positive effect are represented as a point. The size of the point indicates the estimated effect from the test and the color indicates the p-value from the test. A significant positive effect indicates higher expression of the signature in samples having the corresponding cancer type. Tests with a significant negative effect are indicated with an "N". The plot on the right side shows the result of similar tests but with organ group instead of cancer type.*

BRCA2 highly increases the risk of developing breast and/or ovary cancer and to a lesser degree prostate cancer, pancreatic cancer, and melanoma [19]. To further evaluate to which degree the estimated signature has captured the mutational process of a deficiency in BRCA1 or BRCA2, we test how well they model these consequences. This is done through similar two-sided tests of the mean expression of the different signatures. For each sample, the PCAWG dataset further annotates the cancer type and organ group of the cancer type. Here, we do a test for each combination of cancer type and signature. We then test the mean expression of the signature in the samples having that cancer type versus the samples not having that cancer type. We further do the same tests for each combination of organ group and signature. Again, the obtained p-values from the tests are adjusted using the Benjamini–Yekutieli procedure. The adjusted results of the tests are shown in figure 6.

We are interested in examining the behavior of the signatures capturing BRCA1 and BRCA2 deficiency (i.e. signatures 2, 9 and 10). These signatures are expected to have a significantly stronger mean expression in samples with breast cancer and ovary cancer and potentially prostate cancer and pancreatic cancer [19]. We see that signature 10, which was highly expressed in samples harboring a BRCA1 deficiency, is significantly (p-value: 1.12×10^{-26}) expressed (effect: 0.105) in samples suffering from ovary cancer. This corresponds well with the expected behavior. However, we also see that signature 10 is not significantly (p-value: 0.361) expressed in samples with cancer in the breast organ group. This contradicts the expected behavior. An explanation for this might be the fact that only 3 out of the 105 samples suffering from a type of breast cancer have a known BRCA1 deficiency. The mutations of the 102 samples not suffering from a BRCA1 deficiency would therefore not be expected to be the product of signature 10 but a mutational signature corresponding to another mutational process. We further see that the 3 breast cancer patients with a BRCA1 deficiency all have signature 10 as their most expressed signature. This might indicate that the discrepancy between the expected and observed results is caused by a lack of samples suffering a BRCA1 deficiency. The same argument might be used to explain why signature 10 is significantly (p-value: 0.0001) less expressed (effect -0.03) in samples suffering from prostate cancer, which also contradicts the expected behavior. Only 1 out of the 168 samples suffering from prostate cancer has a known BRCA1 deficiency. However, the one prostate cancer patient with a BRCA1 deficiency has signature 10 as its most expressed signature. A similar analysis can be made for signatures 2 and 9 which were highly expressed in samples harboring a BRCA2 deficiency. We see that signature 9 is significantly (p-value: 0.028) stronger expressed (effect: 0.031) in samples suffering from ovary cancer. However, neither signature is significantly expressed in the breast organ group. Here, only 12 out of

the 105 samples suffering from a type of breast cancer have a BRCA2 deficiency. 11 out of these 12 further have either signature 2 or 9 as their most expressed signature. In conclusion, the above-mentioned signatures seem to correlate with the consequences of known driver mutations which indicates that the estimated signatures are likely capturing the structure of true mutational processes.

4 Conclusion

Here, we presented an MCLDA model for structural mutation signature extraction based on cancer patients' somatic mutation data. The estimated signatures show distinct SV feature value combinations. Further, specific signatures show higher expression in some cancer types, correlating with known driver mutations causing these malignancies.

References

[1] Lauri A. Aaltonen et al. "Pan-cancer analysis of whole genomes". In: *Nature* 578.7793 (Feb. 2020), pp. 82–93. ISSN: 1476-4687. DOI: 10.1038/s41586-020-1969-6. URL: https://doi.org/10.1038/s41586-020-1969-6.

[2] Ludmil B Alexandrov and Michael R Stratton. "Mutational signatures: the patterns of somatic mutations hidden in cancer genomes". In: *Current Opinion in Genetics Development* 24 (2014). Cancer genomics, pp. 52–60. ISSN: 0959-437X. DOI: https://doi.org/10.1016/j.gde.2013.11.014. URL: https://www.sciencedirect.com/science/article/pii/S0959437X13001639.

[3] Ludmil B. Alexandrov and Michael R. Stratton. "Mutational signatures: the patterns of somatic mutations hidden in cancer genomes". In: *Current Opinion in Genetics & Development* 24 (2014), pp. 52–60. ISSN: 0959-437X. DOI: https://doi.org/10.1016/j.gde.2013.11.014. URL: https://www.sciencedirect.com/science/article/pii/S0959437X13001639.

[4] Ludmil B. Alexandrov et al. "Deciphering Signatures of Mutational Processes Operative in Human Cancer". In: *Cell Reports* 3.1 (2013), pp. 246–259. ISSN: 2211-1247. DOI: https://doi.org/10.1016/j.celrep.2012.12.008. URL: https://www.sciencedirect.com/science/article/pii/S2211124712004330.

[5] Ludmil B. Alexandrov et al. "Signatures of mutational processes in human cancer". In: *Nature* 500.7463 (Aug. 2013), pp. 415–421. ISSN: 1476-4687. DOI: 10.1038/nature12477. URL: https://doi.org/10.1038/nature12477.

[6] Ludmil B. Alexandrov et al. "The repertoire of mutational signatures in human cancer". In: *Nature* 578.7793 (Feb. 2020), pp. 94–101. ISSN: 1476-4687. DOI: 10.1038/s41586-020-1943-3. URL: https://doi.org/10.1038/s41586-020-1943-3.

[7] Yoav Benjamini and Daniel Yekutieli. "The Control of the False Discovery Rate in Multiple Testing under Dependency". In: *The Annals of Statistics* 29.4 (2001), pp. 1165–1188. ISSN: 00905364, 21688966. DOI: 10.1214/aos/1013699998. URL: http://www.jstor.org/stable/2674075 (visited on 06/09/2025).

[8] David M. Blei. "Probabilistic topic models". In: *Commun. ACM* 55.4 (Apr. 2012), pp. 77–84. ISSN: 0001-0782. DOI: 10.1145/2133806.2133826. URL: https://doi.org/10.1145/2133806.2133826.

[9] David M. Blei, Andrew Y. Ng, and Michael I. Jordan. "Latent dirichlet allocation". In: *J. Mach. Learn. Res.* 3.null (Mar. 2003), pp. 993–1022. ISSN: 1532-4435.

[10] Damiano Fantini et al. "MutSignatures: an R package for extraction and analysis of cancer mutational signatures". en. In: *Scientific Reports* 10.1 (Oct. 2020). Publisher: Nature Publishing Group, p. 18217. ISSN: 2045-2322. DOI: 10.1038/s41598-020-75062-0. URL: https://www.nature.com/articles/s41598-020-75062-0 (visited on 05/20/2025).

[11] Julian S. Gehring et al. "SomaticSignatures: inferring mutational signatures from single-nucleotide variants". In: *Bioinformatics* 31.22 (July 2015). _eprint: https://academic.oup.com/bioinformatics/article-pdf/31/22/3673/49035935/ pp. 3673–3675. ISSN: 1367-4803. DOI: 10.1093/bioinformatics/btv408. URL: https://doi.org/10.1093/bioinformatics/btv408.

[12] S.M. Ashiqul Islam et al. "Uncovering novel mutational signatures by de novo extraction with SigProfilerExtractor". In: *Cell Genomics* 2.11 (Sept. 2022), p. 100179. ISSN: 2666-979X. DOI: 10.1016/j.xgen.2022.100179. URL: https://www.ncbi.nlm.nih.gov/pmc/articles/PMC9646490/ (visited on 05/20/2025).

[13] Gene Koh et al. "Mutational signatures: emerging concepts, caveats and clinical applications". In: *Nature Reviews Cancer* 21.10 (Oct. 2021), pp. 619–637. ISSN: 1474-1768. DOI: 10.1038/s41568-021-00377-7. URL: https://doi.org/10.1038/s41568-021-00377-7.

[14] Yilong Li et al. "Patterns of somatic structural variation in human cancer genomes". In: *Nature* 578.7793 (Feb. 2020), pp. 112–121. ISSN: 1476-4687. DOI: 10.1038/s41586-019-1913-9. URL: https://doi.org/10.1038/s41586-019-1913-9.

[15] Yilong Li et al. "Patterns of somatic structural variation in human cancer genomes". In: *Nature* 578.7793 (Feb. 2020), pp. 112–121. ISSN: 1476-4687. DOI: 10.1038/s41586-019-1913-9. URL: https://doi.org/10.1038/s41586-019-1913-9.

[16] Hsin-Min Lu, Chih-Ping Wei, and Fei-Yuan Hsiao. "Modeling healthcare data using multiple-channel latent Dirichlet allocation". In: *Journal of Biomedical Informatics* 60 (2016), pp. 210–223. ISSN: 1532-0464. DOI: https://doi.org/10.1016/j.jbi.2016.02.003. URL: https://www.sciencedirect.com/science/article/pii/S1532046416000253.

[17] Anand Mayakonda et al. "Maftools: efficient and comprehensive analysis of somatic variants in cancer". en. In: *Genome Research* 28.11 (Jan. 2018). Company: Cold Spring Harbor Laboratory Press Distributor: Cold Spring Harbor Laboratory Press Institution: Cold Spring Harbor Laboratory Press Label: Cold Spring Harbor Laboratory Press Publisher: Cold Spring Harbor Lab, pp. 1747–1756. ISSN: 1088-9051, 1549-5469. DOI: 10.1101/gr.239244.118. URL: http://genome.cshlp.org/content/28/11/1747 (visited on 05/20/2025).

[18] Yuichi Shiraishi et al. "A simple model-based approach to inferring and visualizing cancer mutation signatures". en. In: *PLoS Genet.* 11.12 (Dec. 2015), e1005657. DOI: 10.1371/journal.pgen.1005657. URL: https://journals.plos.org/plosgenetics/article?id=10.1371/journal.pgen.1005657.

[19] Dominique Stoppa-Lyonnet. "The biological effects and clinical implications of BRCA mutations: where do we go from here?" In: *European Journal of Human Genetics* 24.1 (Sept. 2016), S3–S9. ISSN: 1476-5438. DOI: 10.1038/ejhg.2016.93. URL: https://doi.org/10.1038/ejhg.2016.93.

[20] Michael R. Stratton, Peter J. Campbell, and P. Andrew Futreal. "The cancer genome". In: *Nature* 458.7239 (Apr. 2009), pp. 719–724. ISSN: 1476-4687. DOI: 10.1038/nature07943. URL: https://doi.org/10.1038/nature07943.