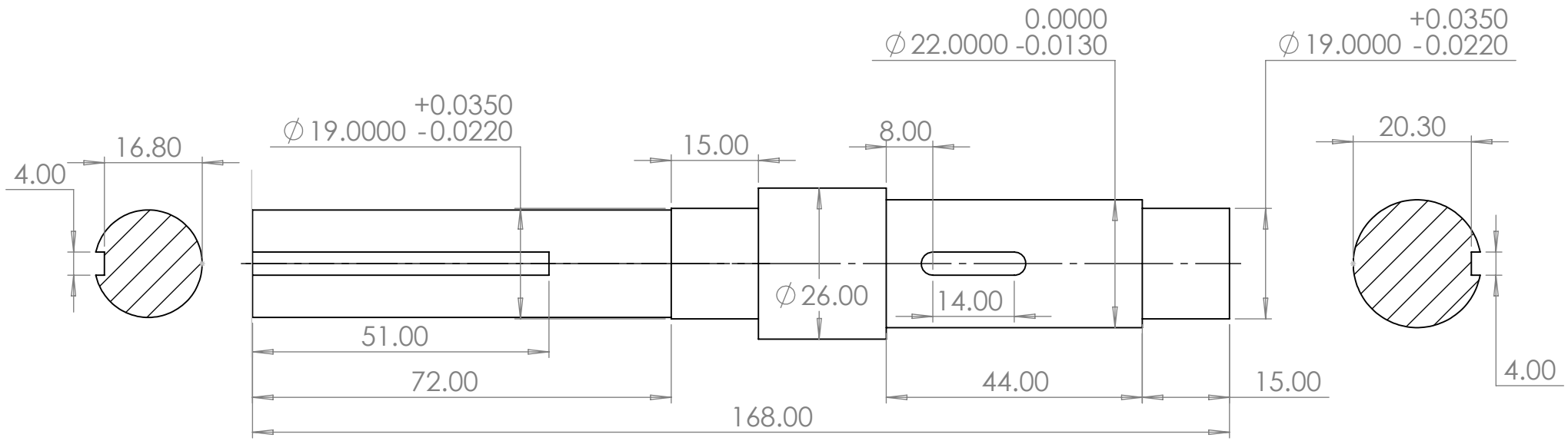


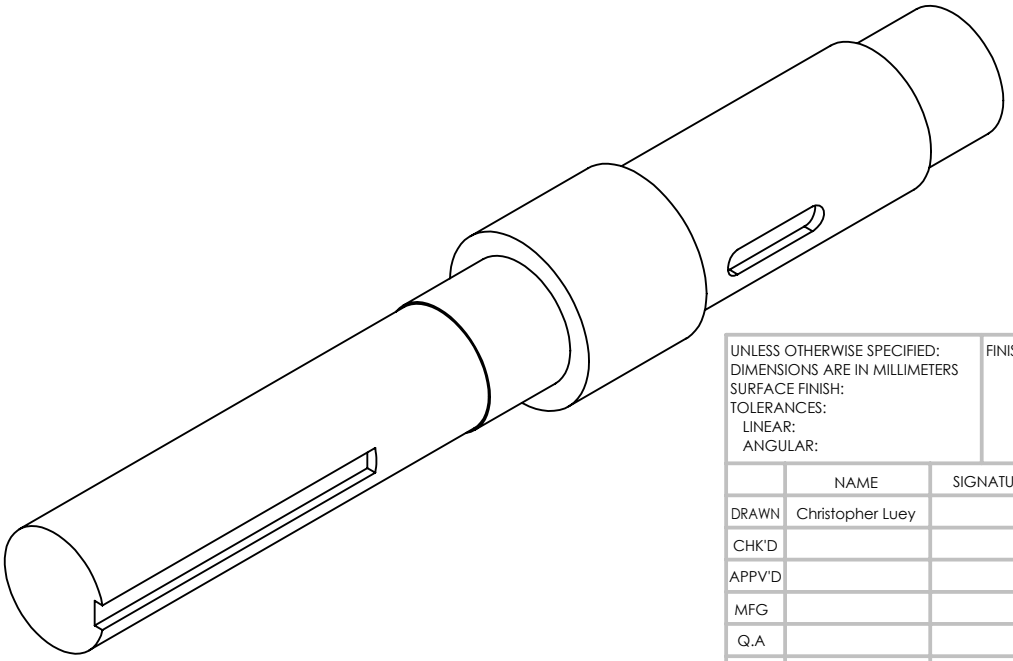

| | | | | | | |
|---|---|---|---|---|---|---|
| UNLESS OTHERWISE SPECIFIED:<br>DIMENSIONS ARE IN MILLIMETERS<br>SURFACE FINISH:<br>TOLERANCES:<br>LINEAR:<br>ANGULAR: | FINISH: | | | | DEBURR AND BREAK SHARP EDGES | DO NOT SCALE DRAWING / REVISION |
| | NAME | SIGNATURE | DATE | | | TITLE: CAD 2 - Shaft |
| DRAWN | Christopher Luey | | | | | |
| CHK'D | | | | | | |
| APPV'D | | | | | | |
| MFG | | | | | | |
| Q.A | | | | MATERIAL: | | DWG NO. Shaft / A4 |
| | | | | WEIGHT: | | SCALE:1:1 / SHEET 1 OF 1 |