Study Material 4

1. Please answer to the following questions <u>in your own words</u>.

(a) (Exercise 6.5) An E-R diagram can be viewed as a graph. What do the following mean in terms of the structure of an enterprise schema?
- The graph is disconnected.
- The graph has a cycle.

(b) (Exercise 6.17) Explain the difference between a weak and a strong entity set.

(c) (Exercise 6.19) We can convert any weak entity set to a strong entity set by simply adding appropriate attributes. Why, then, do we have weak entity sets?

(d) (Exercise 7.10) Our discussion of lossless decomposition implicitly assumed that attributes on the left-hand side of a functional dependency cannot take on null values. What could go wrong on decomposition, if this property is violated?

(e) (Exercise 7.21) *Repetition of information* and *inability to represent information* can be defined as next:
- *Repetition of information*: a condition in a relational database where the values of one attribute are determined by the values of another attribute in the same relation, and both values are repeated throughout the relation.
- *Inability to represent information*: a condition where there is a relation- ship that exists among only a proper subset of the attributes in a relation.

Explain why each of these properties may indicate a bad relational-database design.

(f) (Exercise 7.22) Why are certain functional dependencies called *trivial* functional dependencies?

2. Draw the E-R diagrams for the following databases. Be sure to indicate the cardinalities of the relationship.

(a) Design a database for a bank, including information about *customers*, their *accounts*, and the *own* relationship between them. Information about a *customer* includes their *name, address, phone*, and *customer ID*. An *Account* has an *account number* and *balance*. Also, the *own* relationship keeps *opening date* of each *account*. Note that:
- A *customer* can *own* multiple accounts.
- An *account* is *own*ed by only one customer.
- *Customer ID* and *Account number* are unique to each *customer* and *account*, respectively.

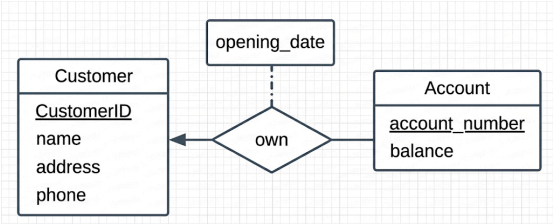

(b) Modify your original diagram of Problem 2(a) such that a *customer* can have multiple *phone* numbers.

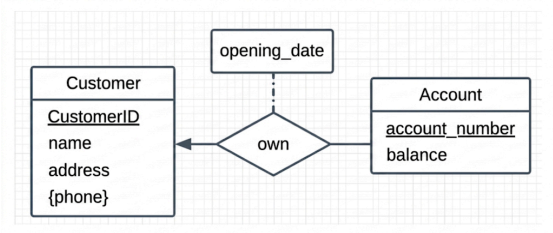

(c) Change your diagram of Problem 2(b) such that a *customer* has an *address* represented by composite attributes (which are *street-city-province* triplets). Note that multiple customers may live at a single address.

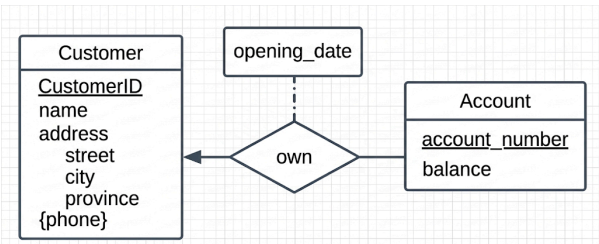

(d) Add a weak entity set of *transaction*s next to *account* (connected via a relationship *record*). This entity set contains *transaction datetime* and *amount* as its attributes.

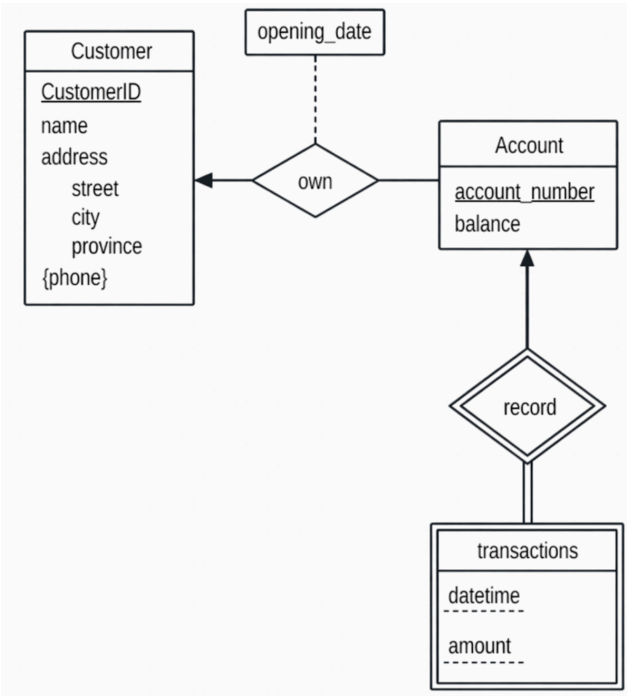

(e) Convert the following E-R diagram into SQL DDL (CREATE TABLE statements).
- Consider the cardinalities of the relationship.
- Recall that we do not allow attributes to have non-primitive data types.

(f) Draw an ER diagram for Record Shop Database

Record Shop
Entity Set
Customer(customer_id, name, address, phone_number, email)
Product(product_id, artist, title, price, description, type)
Purchase(purchase_id, date, payment_method)
Relationship Set
Contains(between product and purchase) (many to many)
Buyer(between customer and purchase) (1 to many)

Sample solution:

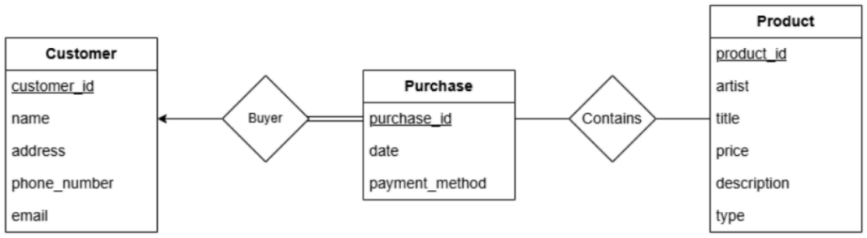

(g) Draw an ER diagram for Flight Database

Flight Database
Entity Set
Airport(code, name, city)
Flight(flight_num, STD, STA, date_offset) * *Note: Flight Entity represents the flight route*
Departure(dept_date, capacity) * *Note: Departure Entity represents the actual schedule*
Customer(customer_id, name, address, mileage_num)
Relationship Set
To(flight, airport)
From(flight, airport)
Flight_dept(flight, departure)
Reserved_On(customer, departure)

Sample solution:

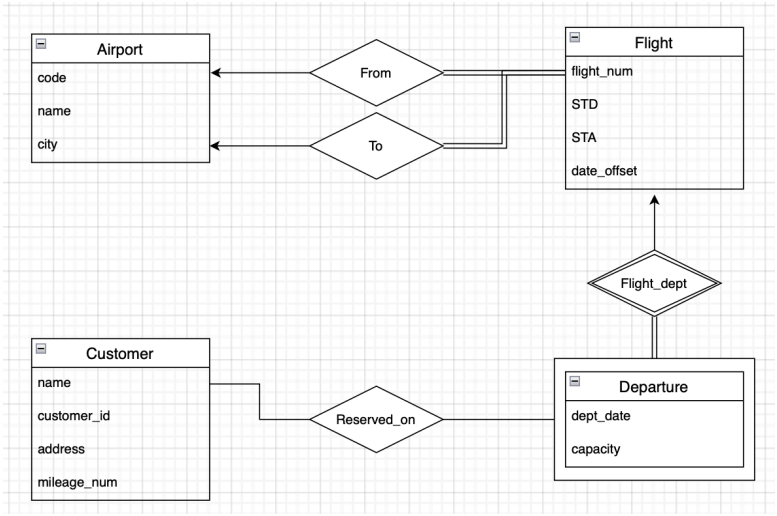

3. Normalization

(a) Is every relation in 3NF also in BCNF? If yes, explain why. If no, given a counter example.

(b) Is every relation in 4NF also in BCNF? If yes, explain why. If no, given a counter example.

(c) The following relation violates {1NF, 2NF, 3NF, 4NF, BCNF}?

employee_id	**name**	**branch**	**project**
1001	Brown	Seoul	Mars, Saturn
1004	Green	Seoul	Saturn
1005	Hopkins	Pohang	Jupiter, Saturn
2001	Kim	Seoul	Mars
3002	Walker	Seoul	Venus
3004	Kim	Pohang	Venus
3005	Clermont	Pohang	Jupiter, Saturn

(d) The following relation violates {1NF, 2NF, 3NF, 4NF, BCNF}?

employee_id	**name**	**branch**	**branch_address**
1001	Brown	Seoul	Garosu-gil 233

1004	Green	Seoul	Garosu-gil 233
1005	Hopkins	Pohang	Handong-ro 501
2001	Kim	Seoul	Garosu-gil 233
3002	Walker	Seoul	Garosu-gil 233
3004	Kim	Pohang	Handong-ro 501
3005	Clermont	Pohang	Handong-ro 501

(e) The following relation violates {1NF, 2NF, 3NF, 4NF, BCNF}?

employee_id	**name**	**branch**	**dept_id**	**dept_name**
1001	Brown	Seoul	202	Sales
1004	Green	Seoul	201	Operation
1005	Hopkins	Pohang	303	Software development
2001	Kim	Seoul	303	Software development
3002	Walker	Seoul	303	Software development
3004	Kim	Pohang	308	User experience
3005	Clermont	Pohang	201	Operation