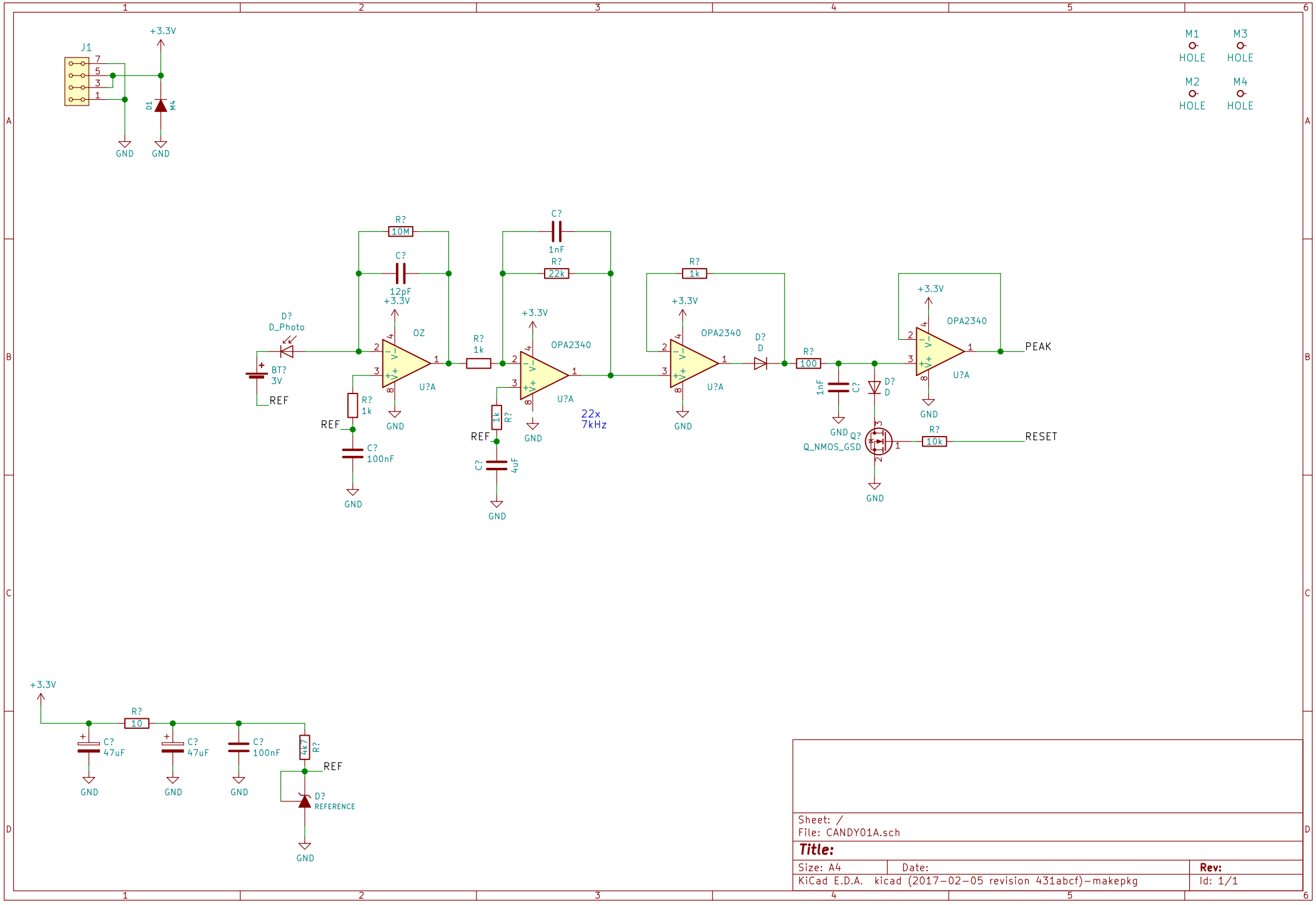
J1
+3.3V
D1
M4
GND
M1
HOLE
M3
HOLE
M2
HOLE
M4
HOLE
R?
10M
C?
12pF
+3.3V
D?
D_Photo
BT?
3V
REF
OZ
U?A
R?
1k
C?
100nF
C?
1nF
R?
22k
OPA2340
22x
7kHz
C?
4uF
R?
1k
D?
D
R?
100
1nF
C?
Q?
Q_NMOS_GSD
R?
10k
RESET
PEAK
R?
10
C?
47uF
C?
100nF
4k7
R?
D?
REFERENCE
Sheet: /
File: CANDY01A.sch
Title:
Size: A4
Date:
Rev:
KiCad E.D.A. kicad (2017-02-05 revision 431abcf)-makepkg
Id: 1/1