Microcontroller

Pins in **BOLD** are interrupt-capable and will not collide with one another

Interrupt Allocation
INT00 -
INT01 - PB02 - BTN_EN1
INT02 - PB02 - BTN_EN2
INT03 -
INT04 -
INT05 - PC05 - KILL
INT06 -
INT07 - PE07 - BTN_ENC
INT08 - PD08 - Y-MAX
INT09 - PD09 - Z-MIN
INT10 - PD10 - Z-MAX
INT11
INT12 - PB12 - X-MIN
INT13 - PB13 - X-MAX
INT14 -
INT15 - PB15 - Y-MIN

ADC Allocation
THERM0 - ADC12_IN14
THERM1 - ADC123_IN13
THERM2 - ADC123_IN12
THERM3 - ADC123_IN11
THERM4 - ADC123_IN10

Special Pins
The following pins initialise to alternate functions with pull-up/pull-down on reset, and should be avoided as GPIO if possible:

Pin	-	Reset Behaviour
PA15	-	pull-up
PA14	-	pull-down
PA13	-	pull-up
PB4	-	pull-up
PB3	-	floating

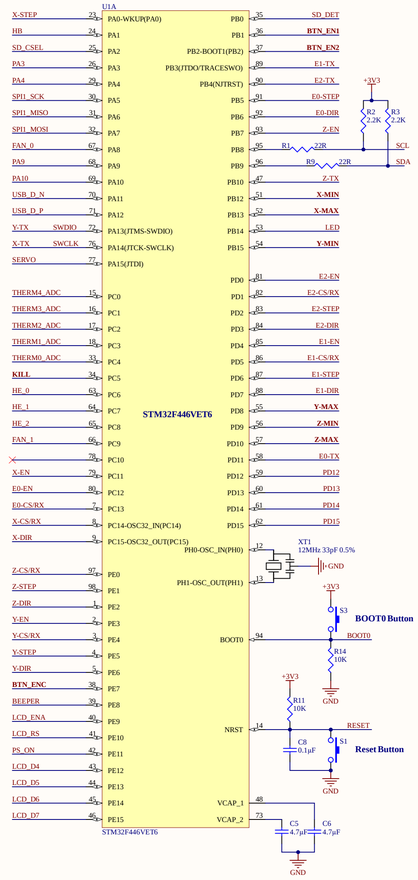

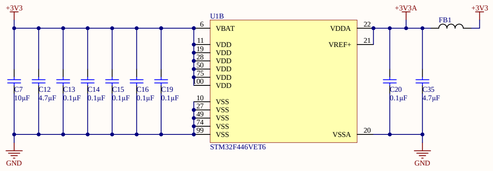

Thermistors

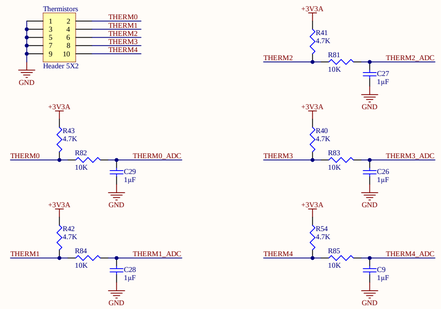

Endstops

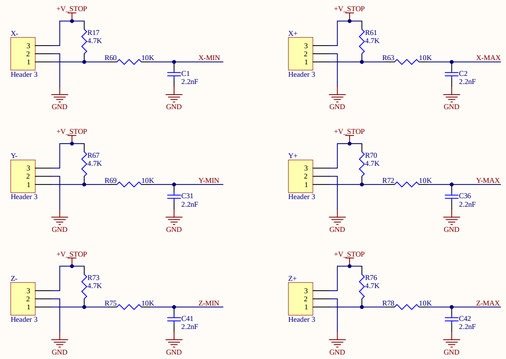

Auxiliary IO

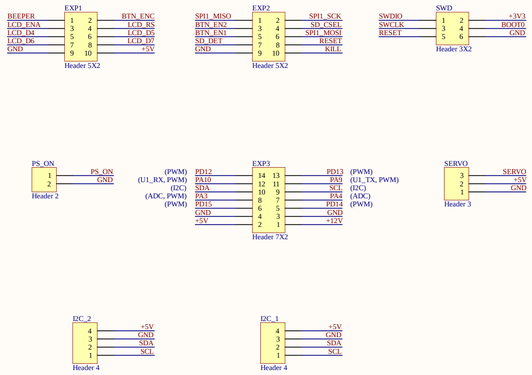

USB

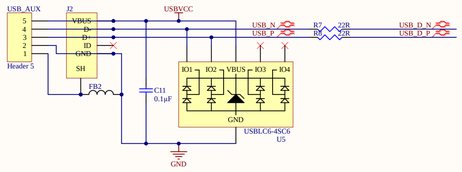

LEDs

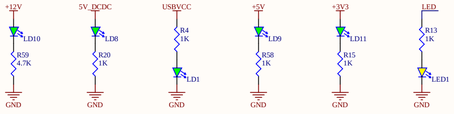

Stepper Drivers

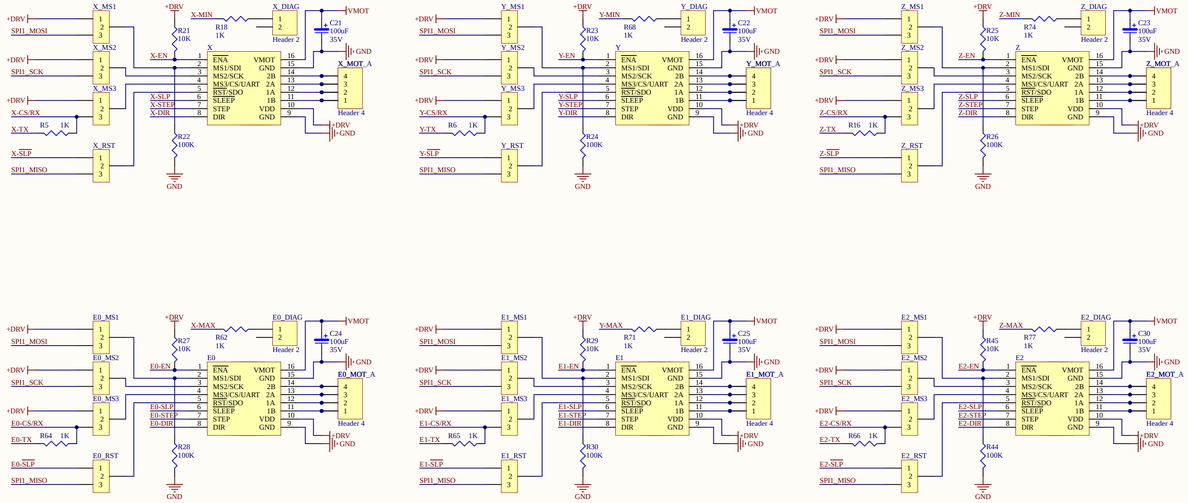

Four 3-way jumpers per driver allow selection and configuration of microstepping mode (A4988, DRV8825, TMC2100, etc.), SPI mode (TMC2130 etc.) or UART mode (TMC2208, TMC2209).

MOSFET Outputs

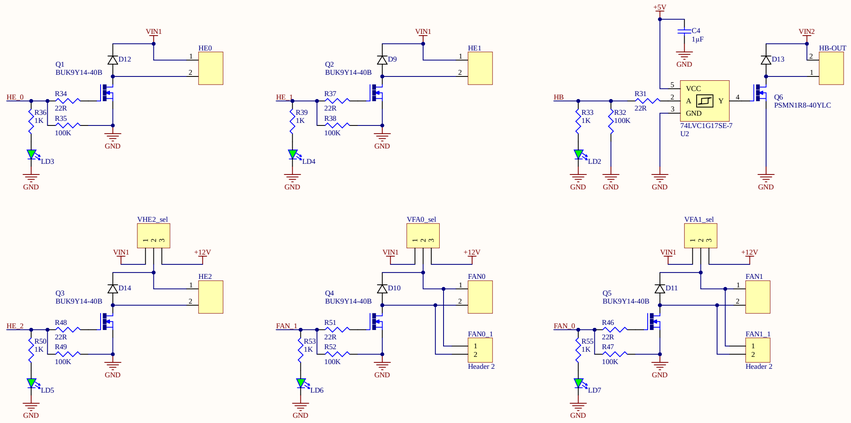

BED MOSFET Notes
Logic buffer IC is used to drive MOSFET with 5V signal.

PSMN1R8-40YLC RDSon (max) @ 4.5V = 2.1mΩ

Must be able to handle up to 20A.

P = I^2 x R
= 20^2 x 2.1mΩ
= 0.84W

Alternatives:
PSMN1R4-40YLDX (1.85mΩ)
PSMN1R0-40YLDX (1.40mΩ)

Heater/Fan MOSFET Notes
BUK9Y14-40B RDSon (max) @ 3V = 15mΩ

Must be able to handle up to 5A.

P = I^2 x R
= 5^2 x 15mΩ
= .375W

Alternatives:
PSMN7R5-60YLX (9mΩ)
BUK9Y4R4-40E (6mΩ)

Power

For TMC stepper drivers, VMOT must be present when logic rail is powered or IO are driven, or damage may occur.

If VIN is present, Q7 closes and VIN powers VMOT with minimal voltage drop.
If VIN is not present, Q7 opens and +5V powers VMOT via D3.

Stepper drivers are provided with 3V power by default. Logic signals from microcontroller are 3V - some drivers (A4988) will only work with 3V logic when running on 3V power. Others (DRV8825, TMC2130) will work with 3V logic powered from 3V or 5V.

All known drivers should work with 3V power, but jumper J3 can be cut and set to 5V if required.

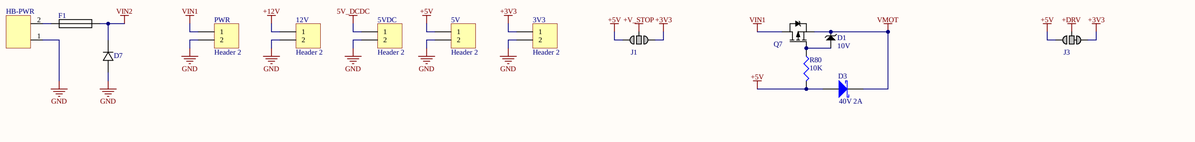

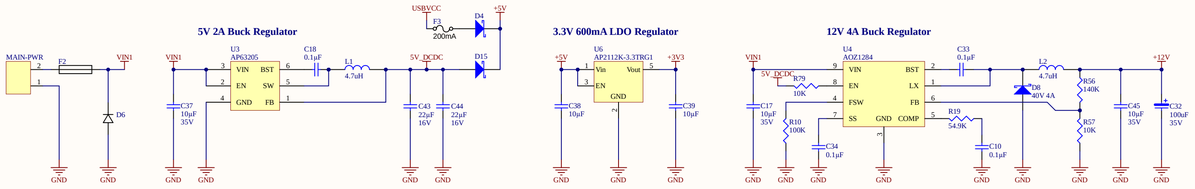

EEPROM

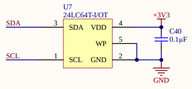

Aus3D

GPLv3
aus3d.com.au/rumba32
github.com/Aus3D/RUMBA32

RUMBA32 design by Chris Barr for Aus3D.
See GitHub page for change history and details.

Date: 18/05/2020 REV: 1.1A