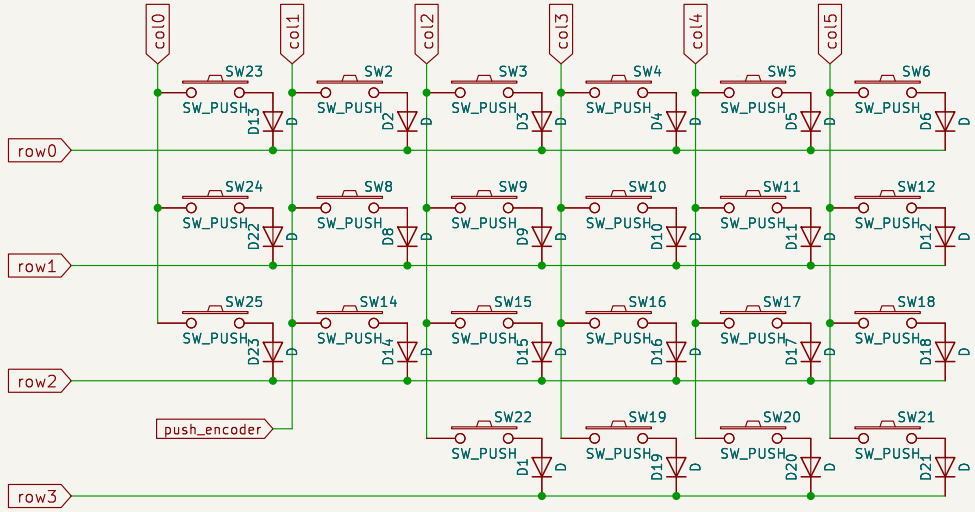

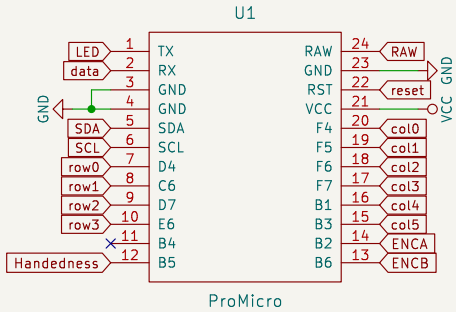

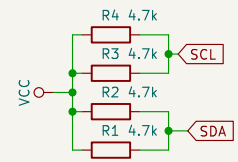

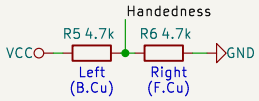

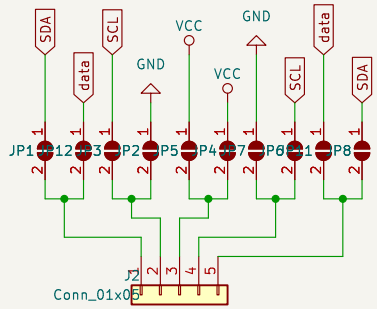

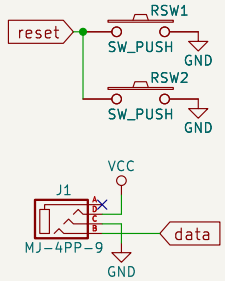

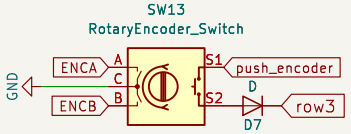

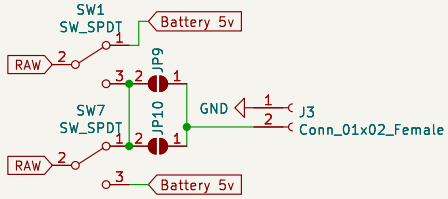

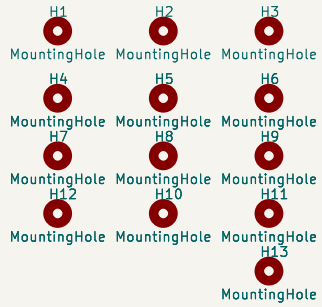

pashutk & krikun98 & vaarai & chukozor

Sheet: /

File: chocofi.kicad_sch

Title: Chocofi

Size: A4	Date: 2023-04-17	**Rev: 0.2**
KiCad E.D.A. 8.0.4		Id: 1/1