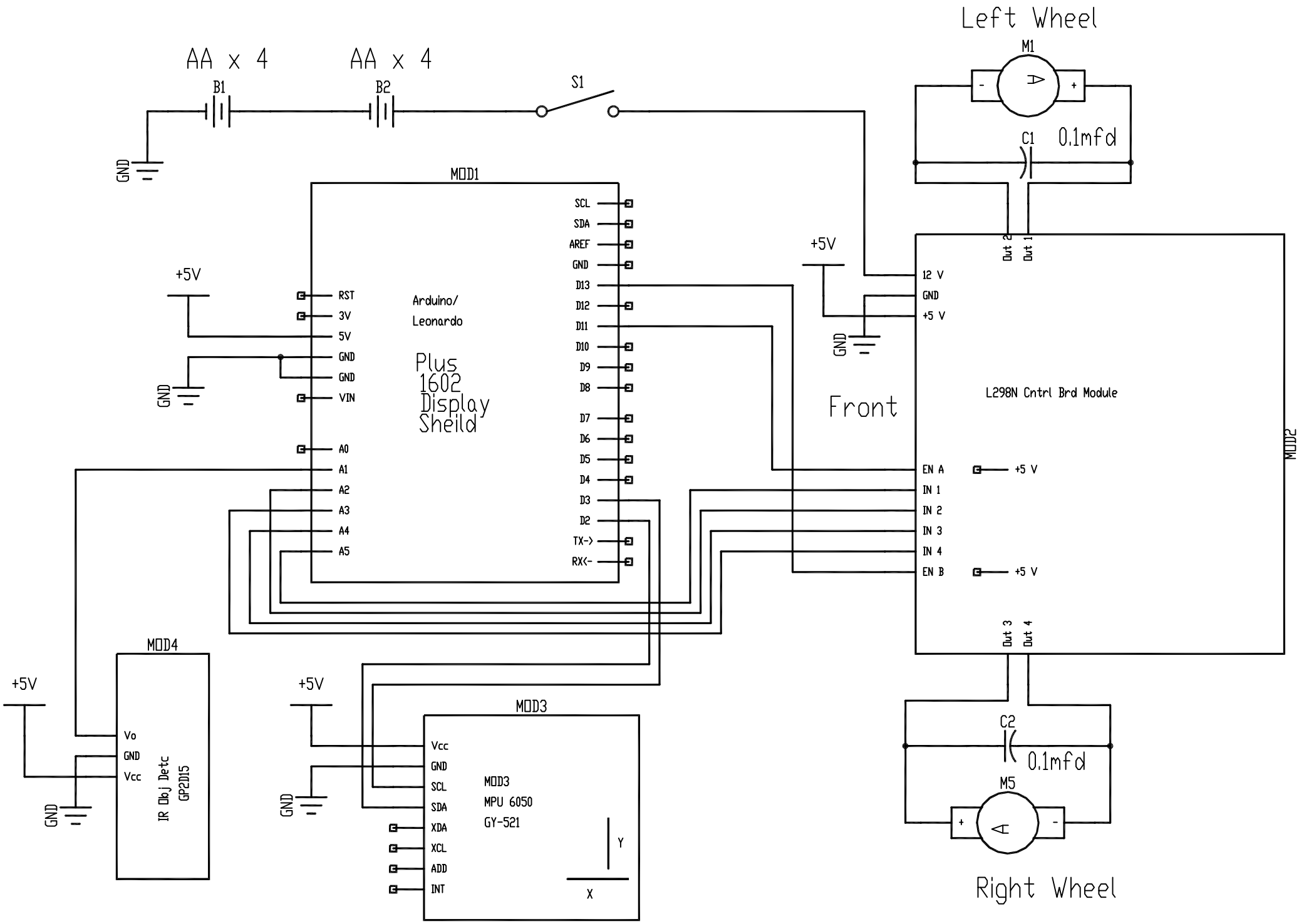

Note: MPU-6050 is mounted component side down
with the Y-Axis pointed toward the back.