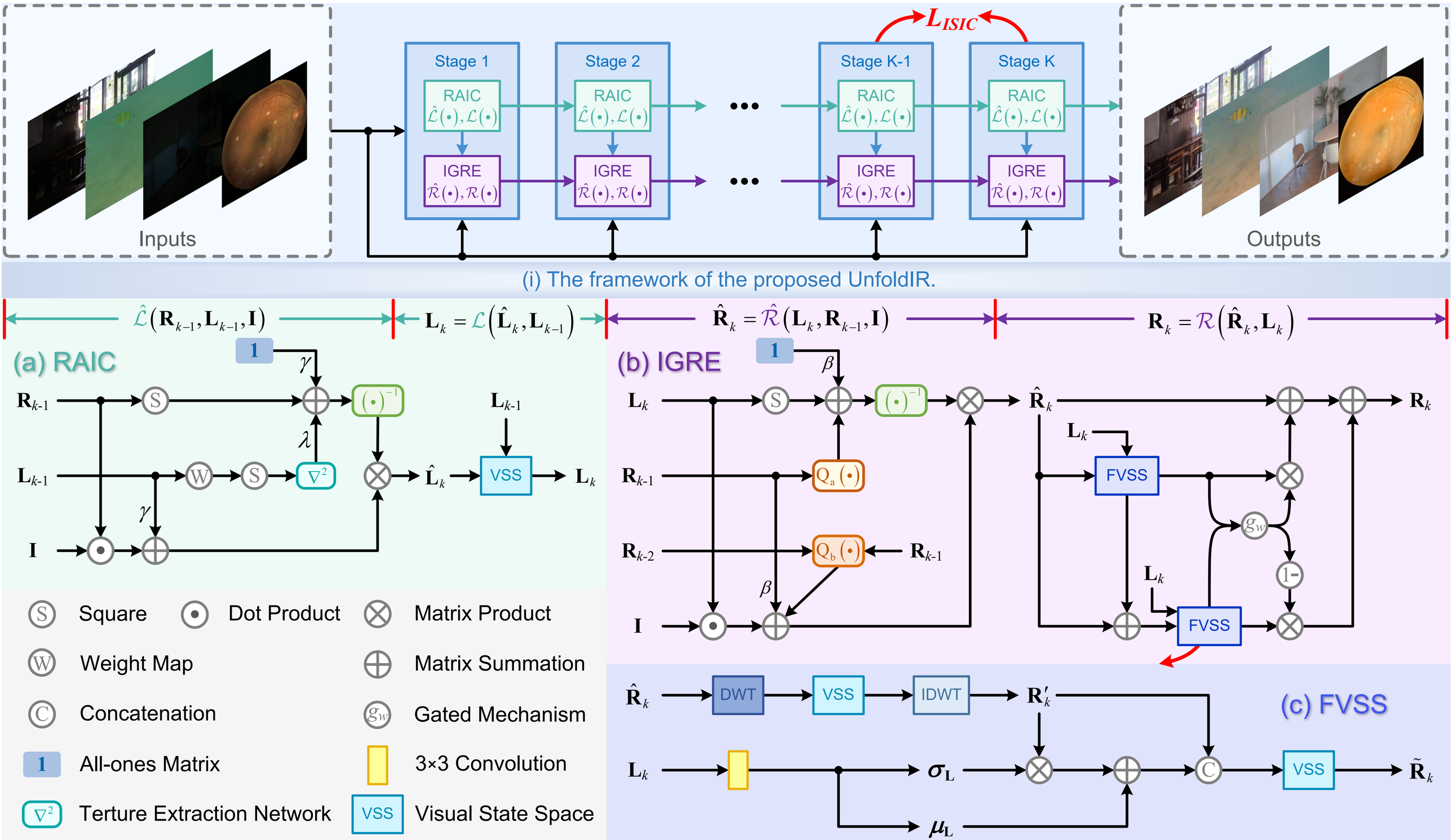

(i) The framework of the proposed UnfoldIR.

(ii) Details of RAIC, IGRE, and FVSS at the kth stage.