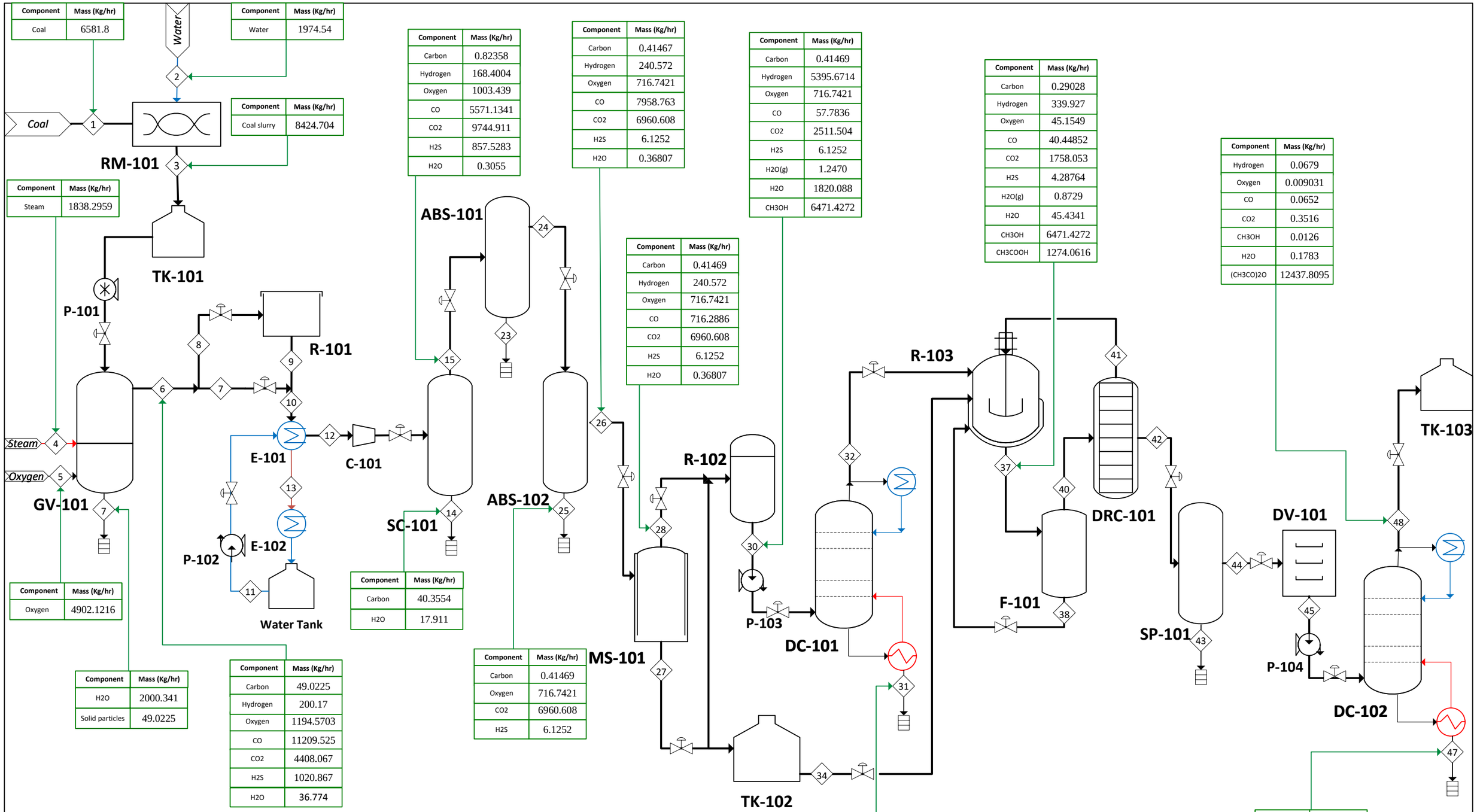

Component	Mass (Kg/hr)
Coal	6581.8

Component	Mass (Kg/hr)
Water	1974.54

Component	Mass (Kg/hr)
Coal slurry	8424.704

Component	Mass (Kg/hr)
Steam	1838.2959

Component	Mass (Kg/hr)
Oxygen	4902.1216

Component	Mass (Kg/hr)
H2O	2000.341
Solid particles	49.0225

Component	Mass (Kg/hr)
Carbon	49.0225
Hydrogen	200.17
Oxygen	1194.5703
CO	11209.525
CO2	4408.067
H2S	1020.867
H2O	36.774

Component	Mass (Kg/hr)
Carbon	0.82358
Hydrogen	168.4004
Oxygen	1003.439
CO	5571.1341
CO2	9744.911
H2S	857.5283
H2O	0.3055

Component	Mass (Kg/hr)
Carbon	40.3554
H2O	17.911

Component	Mass (Kg/hr)
Carbon	0.41469
Oxygen	716.7421
CO2	6960.608
H2S	6.1252

Component	Mass (Kg/hr)
Carbon	0.41467
Hydrogen	240.572
Oxygen	716.7421
CO	7958.763
CO2	6960.608
H2S	6.1252
H2O	0.36807

Component	Mass (Kg/hr)
Carbon	0.41469
Hydrogen	240.572
Oxygen	716.7421
CO	716.2886
CO2	6960.608
H2S	6.1252
H2O	0.36807

Component	Mass (Kg/hr)
Carbon	0.41469
Hydrogen	5395.6714
Oxygen	716.7421
CO	57.7836
CO2	2511.504
H2S	6.1252
H2O(g)	1.2470
H2O	1820.088
CH3OH	6471.4272

Component	Mass (Kg/hr)
Hydrogen	4910.061
Oxygen	652.235
CO2	2285.469
H2S	5.5739
H2O	1656.28

Component	Mass (Kg/hr)
Carbon	0.29028
Hydrogen	339.927
Oxygen	45.1549
CO	40.44852
CO2	1758.053
H2S	4.28764
H2O(g)	0.8729
H2O	45.4341
CH3OH	6471.4272
CH3COOH	1274.0616

Component	Mass (Kg/hr)
Hydrogen	0.0679
Oxygen	0.009031
CO	0.0652
CO2	0.3516
CH3OH	0.0126
H2O	0.1783
(CH3CO)2O	12437.8095

Component	Mass (Kg/hr)
Hydrogen	6.731
Oxygen	0.8941
CO	6.4515
CO2	34.809
CH3OH	1.2545
H2O	17.6517
(CH3CO)2O	125.63

QUANTITATIVE FLOW DIAGRAM FOR THE PRODUCTION OF ACID ANHYDRIDE FROM COAL