GATE

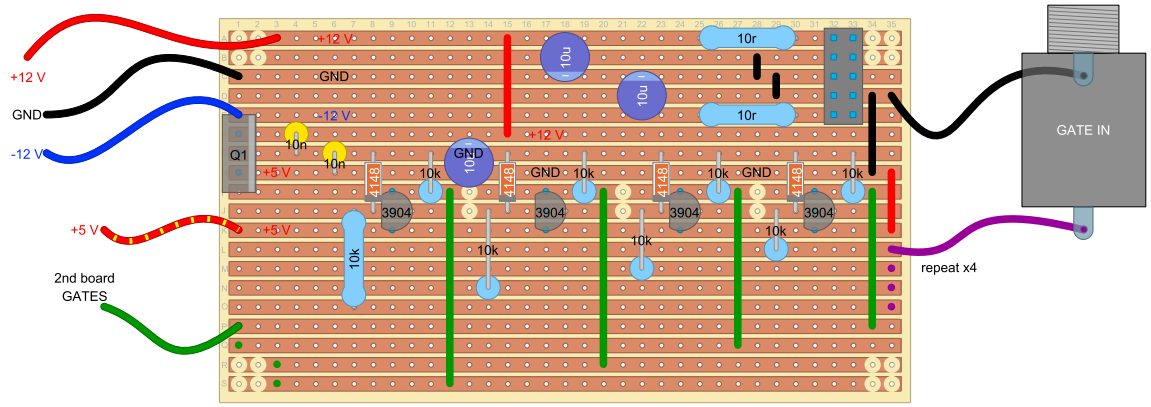
+12 V
GND
-12 V
+5 V
2nd board
GATES
Q1
10n
10n
+12 V
GND
-12 V
+12 V
+5 V
+5 V
10u
10u
10r
10r
GND
GND
GND
4148
4148
4148
4148
10k
10k
10k
10k
10k
10k
10k
3904
3904
3904
3904
GATE IN
repeat x4

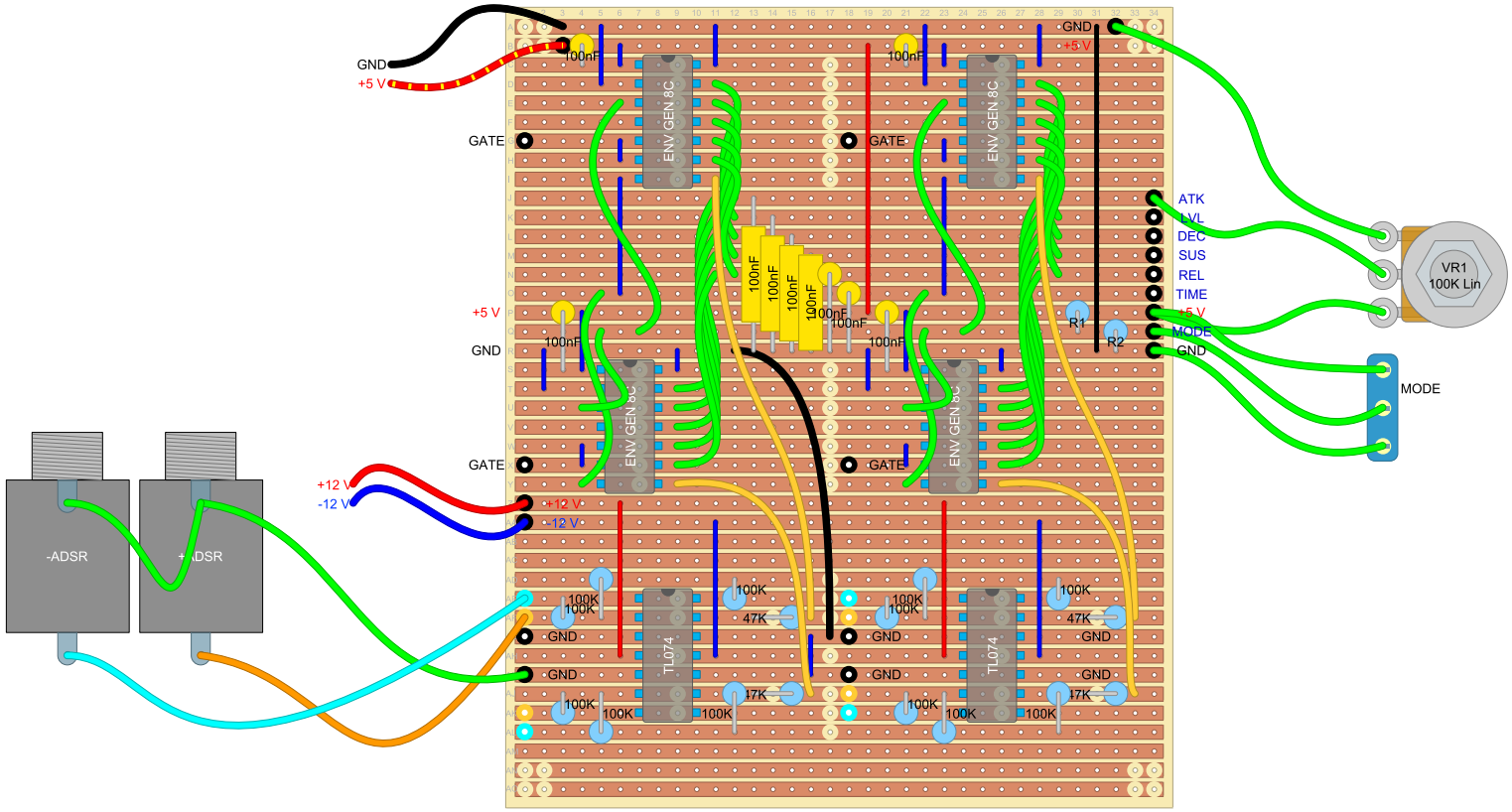
GND
+5 V
GATE
GATE
GND
GATE
GATE
+12 V
-12 V
-ADSR
+ADSR
ENV GEN 8C
ENV GEN 8C
ENV GEN 8C
ENV GEN 8C
TL074
TL074
100nF
100nF
100nF
100nF
100nF
100nF
100nF
100nF
100nF
100nF
100nF
100nF
+5 V
GND
+12 V
-12 V
GND
GND
GND
GND
GND
GND
100K
100K
100K
100K
100K
100K
100K
100K
47K
47K
47K
47K
R1
R2
ATK
LVL
DEC
SUS
REL
TIME
+5 V
MODE
GND
VR1
100K Lin
MODE