GATE

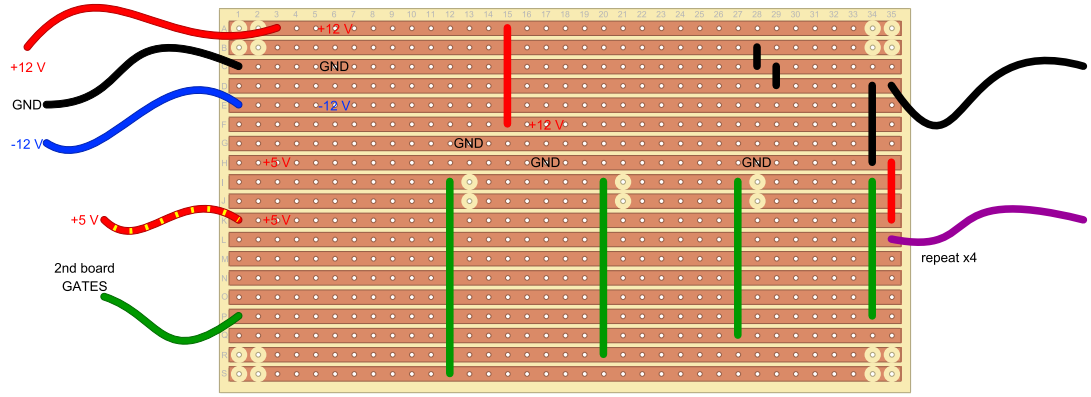
+12 V
GND
-12 V
+5 V
2nd board
GATES
+12 V
GND
-12 V
+12 V
GND
+5 V
GND
GND
+5 V
repeat x4

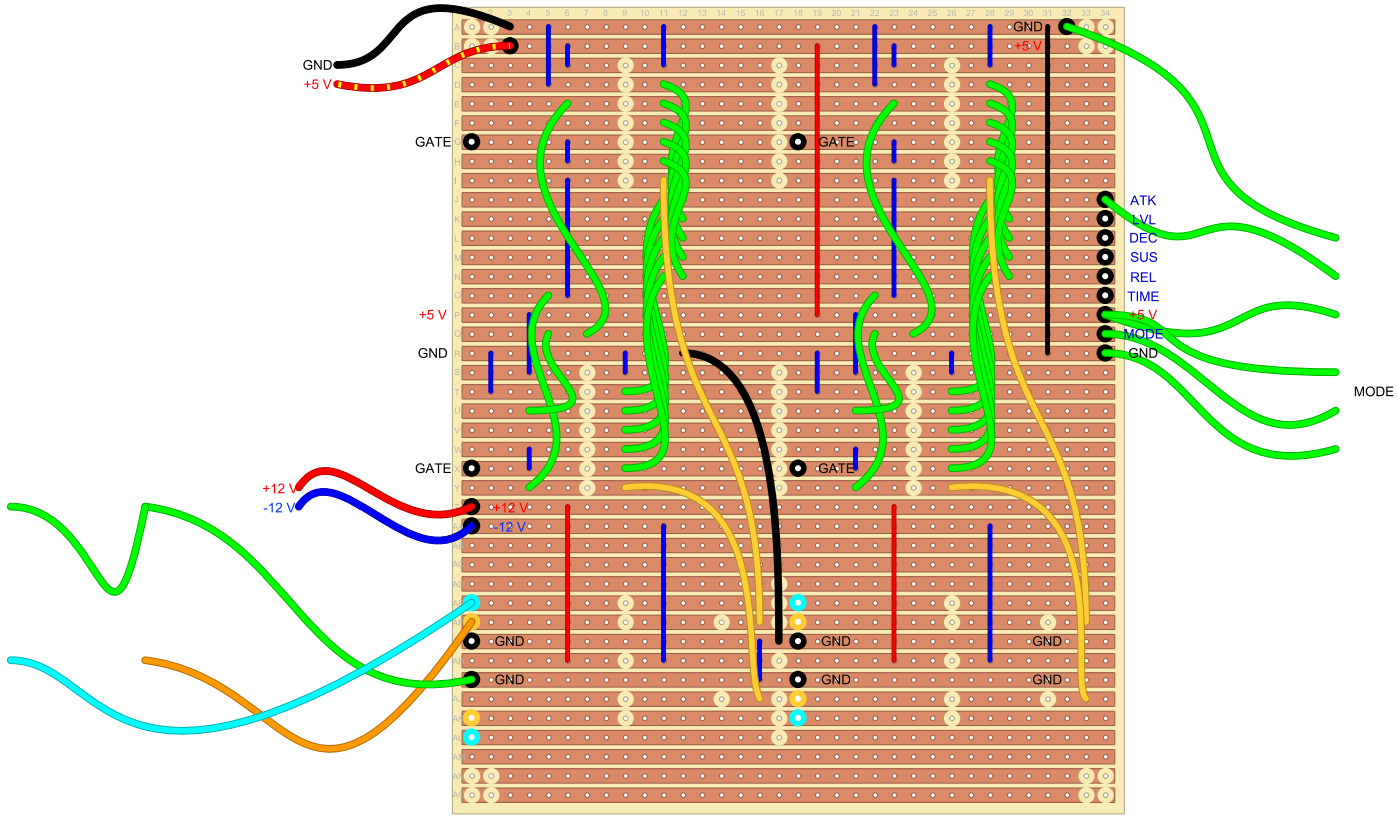
GND
+5 V
GATE
GATE
+5 V
GND
GATE
GATE
+12 V
-12 V
+12 V
-12 V
GND
GND
GND
GND
GND
GND
GND
+5 V
ATK
LVL
DEC
SUS
REL
TIME
+5 V
MODE
GND
MODE