Capital Construction Management, LLC
P.O. Box 126208
Harrisburg, Pennsylvania 17112
P: (717) 566-7095

Project: 2020 CCM-073 Mount St. Mary's COAD Expansion
16300 Old Emmitsburg Rd
Emmitsburg, Maryland 21727

Submittal #042000-1.0 - Unit Masonry Product Data
042000 - Unit Masonry

Revision	0	**Submittal Manager**	Margaret DelDuco-Smith (JEM Group)
Status	Open	**Date Created**	Apr 7, 2023
Issue Date	Apr 7, 2023	**Spec Section**	042000 - Unit Masonry
Responsible Contractor	JEM Group	**Received From**	Margaret DelDuco-Smith (JEM Group)
Received Date		**Submit By**	
Final Due Date	Apr 18, 2023	**Lead Time**	
		Cost Code	
Location		**Type**	Product Information

Approvers Mike Preston (Stantec), Admin - Stantec (Stantec), Nathan Werner (Stantec)

Ball in Court Mike Preston (Stantec), Admin - Stantec (Stantec), Nathan Werner (Stantec)

Distribution Adam Smith (JEM Group), George Forney (JEM Group), Margaret DelDuco-Smith (JEM Group)

Description

Submittal Workflow

Name	Sent Date	Due Date	Returned Date	Response	Attachments
General Information Attachments					042000-1 Unit Masonry Product Data.pdf
Mike Preston	Apr 7, 2023	Apr 18, 2023		Pending	
Admin - Stantec	Apr 7, 2023	Apr 18, 2023		Pending	
Nathan Werner	Apr 7, 2023	Apr 18, 2023		Pending	

ROBERT W. SHECKLES, INC.
4608 Wedgewood Blvd - Frederick, Md 21703
Phone 301/663-4248 Fax 301/663-4857
Quality Masonry Since 1948

Material Certifications

Date: 4/7/2023
To: JEM Group

From: Deanna Sheckles (deanna@rwsheckles.com)
Re: Mt St Mary's COAD Science Building Addition/Renovation

We hereby submit material certifications for the above referenced project as follows for Masonry:

Spec Section 042000:	Material:	Manufacturer:
2.1	cmu	York Building Products
	mortar for cmu	Lehigh Hanson Heidelberg Cement Group
per Dwg S000 - Ivany.1	ivany cmu	York Building Products
per Dwg S000 - Ivany.4	mortar for ivany cmu	Lehigh Hanson Heidelberg Cement Group
per Dwg S000 - Ivany.5	masonry grout (tower)	The Quikrete Companies
per Dwg S000 - Ivany.5	masonry grout (truck)	Schuster Concrete Ready Mix, LLC
2.3 A	reinforcement wire	Hohmann & Barnard, Inc.
	rebar positioners	Hohmann & Barnard, Inc.
still outstanding		
	Rebar Shop Drawings	Victory Steel Company

Mt St Mary's COAD Science Bldg. Addition
Robert W. Sheckles, Inc (masonry contractor)
Spec Section: 042000 – 2.1
Material Submitted: cmu

March 15, 2023

Robert W Sheckles, Inc.
4608 Wedgewood Blvd
Frederick, MD 21703

CERTIFICATION

PROJECT: Mt St Mary's COAD Science Building

ARCHITECT: Stantec

GENERAL CONTRACTOR: JEM Group

MASONRY CONTRACTOR: Robert W Sheckles, Inc.

We herewith certify that all concrete masonry units supplied for the above-referenced project comply fully with the A.S.T.M. designations as follows:

C90-21: Standard Specification for Load Bearing Concrete Masonry Units
PRODUCT: Normal Weight CMU

Normal weight concrete masonry units are made from crushed limestone aggregates meeting requirements of A.S.T.M. C-33.

Respectfully,
YORK BUILDING PRODUCTS CO., INC.

Brian Reilly
Sales Representative

P.O. Box 1708, York, Pennsylvania 17405
717-848-2831 FAX 717-854-9156
www.yorkbuilding.com

Pennoni
PENNONI ASSOCIATES INC.
CONSULTING ENGINEERS

Project No.: **YORKX-19001**

Report Date: **December 9, 2021**

Client: **York Building Products Company**
Address: **Sam Cooke**
950 Smile Way
York, PA 17404

Project Name: **York Building Products Company**

Date Received: **October 6, 2021**

Date of Compression Testing: **November 19, 2021**

Date of Absorption Testing: **November 23, 2021**

Unit Specification: **ASTM C90**

Unit Designation and Description: **Concrete Masonry Unit**
6" x 8" x 16", Hollow, Normal Weight
Frederick Plant

Testing Technician: **A S Konte**

Laboratory Number:**10- 194879**

Summary of Test Results

Physical Property	Specification Values	Average Test Results		Physical Property	Specification Values	Average Test Results	
Net Compressive Strength (min.)	2000	**2360**	*psi*	Min. Faceshell Thickness (FST)	1.00	**1.17**	*in.*
Gross Compressive Strength		**1360**	*psi*	Min. Web Thickness (WT)	0.750	**1.24**	*in.*
Density		**126.4**	*pcf*	Equivalent Web Thickness		**2.86**	*in.*
Absorption (max.)	13	**11.1**	*pcf*	Equivalent Thickness		**3.25**	*in.*
Percent Solid		**57.6**	*%*	Normalized Web Area	6.5	**34.4**	$in.^2/ft.^2$
Net Cross-Sectional Area		**50.71**	$in.^2$	Max. Var. From Spec. Dimensions			*in.*
Gross Cross-Sectional Area		**88.06**	$in.^2$	Moisture Content			*%*

Individual Unit Test Results

Compression Units

Specimen No.	Received Wt, W_R	Cross-Sectional Area		Max. Load	Compressive Strength	
		Gross	Net*		Gross	Net
	lb.	$in.^2$	$in.^2$	*lb*	*psi*	*psi*
4	28.94	88.52	50.47	119280	1340	2360
5	28.22	87.79	50.84	115910	1320	2270
6	28.44	87.87	50.74	125340	1420	2470
Average	**28.53**	**88.06**	**50.68**	**120180**	**1360**	**2360**

* Net area determined from absorption specimens unless solid units are used.

Absorption Units

Specimen No.	Average Width	Average Height	Average Length	Average Min. FST	Average Min. WT	Normalized Web Area
	in.	*in.*	*in.*	*in.*	*in.*	$In.^2/ft^2$
1	5.64	7.62	15.57	1.17	1.25	34.6
2	5.65	7.65	15.62	1.17	1.24	34.3
3	5.63	7.62	15.59	1.17	1.23	34.2
Average	**5.64**	**7.63**	**15.59**	**1.17**	**1.24**	**34.4**

Specimen No.	Received Wt, W_R**	Immersed Wt, W_I	Saturated Wt, W_S	Oven-Dry Wt, W_D	Absorption		Density	Net Volume	Net Area	Percent Solid	Moisture Content** % of total absorption
	lb	*lb*	*lb*	*lb*	*pcf*	*%*	*pcf*	ft^3	in^2	*%*	
1	28.83	16.92	30.83	28.45	10.7	8.4	127.6	0.2228	50.74	57.6	
2	28.92	16.94	31.08	28.57	11.1	8.8	126.1	0.2265	50.51	58.0	
3	28.18	16.53	30.34	27.79	11.5	9.2	125.6	0.2212	50.74	57.2	
Average	**28.64**	**16.80**	**30.75**	**28.27**	**11.1**	**8.8**	**126.4**	**0.2235**	**50.66**	**57.6**	

**Received weight determined at the time of unit delivery to the job site or from units sampled at that time and delivered to the laboratory in sealed containers for moisture content determination.

Remarks: The units were tested according to ASTM C140. This set meets the absorption and compressive strength requirements of ASTM C90
NCMA 7-1C Fire Rating = 1.4 hours, based on the client supplied mix design.
This report shall not be reproduced, except in full, without prior written approval from Pennoni. The above results relate only to the items tested.
Samples were obtained and delivered to the lab by the client.

Chas M. Snyder, PE
Laboratory Manager

Pennoni
PENNONI ASSOCIATES INC.
CONSULTING ENGINEERS

Project No.: **YORKX-19001**

Report Date: **January 15, 2022**

Client: **York Building Products Company**
Address: **Sam Cooke**
950 Smile Way
York, PA 17404

Project Name: **York Building Products**

Date Received: **December 16, 2021**

Date of Compression Testing: **January 14, 2022**

Date of Absorption Testing: **January 13, 2022**

Unit Specification: **ASTM C90**

Unit Designation and Description: **Concrete Masonry Unit**
4 x 8 x 16", Hollow, Normal Weight
Frederick Plant

Testing Technician: **A S Konte**

Laboratory Number: **10- 196425**

Summary of Test Results

Physical Property	Specification Values	Average Test Results		Physical Property	Specification Values	Average Test Results	
Net Compressive Strength (min.)	2000	**2010**	*psi*	Min. Faceshell Thickness (FST)	0.75	**1.07**	*in.*
Gross Compressive Strength		**1390**	*psi*	Min. Web Thickness (WT)	0.750	**1.02**	*in.*
Density		**127.7**	*pcf*	Equivalent Web Thickness		**2.37**	*in.*
Absorption (max.)	13	**11.3**	*pcf*	Equivalent Thickness		**2.53**	*in.*
Percent Solid		**69.6**	*%*	Normalized Web Area	6.5	**28.4**	$in.^2/ft.^2$
Net Cross-Sectional Area		**39.41**	$in.^2$	Max. Var. From Spec. Dimensions			*in.*
Gross Cross-Sectional Area		**56.62**	$in.^2$	Moisture Content			*%*

Individual Unit Test Results

Compression Units

Specimen No.	Received Wt, W_R	Cross-Sectional Area		Max. Load	Compressive Strength	
		Gross	Net*		Gross	Net
	lb.	$in.^2$	$in.^2$	*lb*	*psi*	*psi*
4	22.26	56.60	39.47	77695	1370	1960
5	22.94	56.69	39.19	82015	1440	2090
6	22.72	56.56	39.55	78550	1380	1980
Average	**22.64**	**56.62**	**39.41**	**79420**	**1390**	**2010**

* Net area determined from absorption specimens unless solid units are used.

Absorption Units

Specimen No.	Average Width	Average Height	Average Length	Average Min. FST	Average Min. WT	Normalized Web Area
	in.	*in.*	*in.*	*in.*	*in.*	$In.^2/ft^2$
1	3.64	7.68	15.57	1.08	1.04	28.9
2	3.64	7.60	15.54	1.05	1.03	28.5
3	3.64	7.64	15.57	1.08	1.00	27.8
Average	**3.64**	**7.64**	**15.56**	**1.07**	**1.02**	**28.4**

Specimen No.	Received Wt, W_R**	Immersed Wt, W_I	Saturated Wt, W_S	Oven-Dry Wt, W_D	Absorption		Density	Net Volume	Net Area	Percent Solid	Moisture Content** % of total absorption
	lb	*lb*	*lb*	*lb*	*pcf*	*%*	*pcf*	ft^3	in^2	*%*	
1	22.81	13.59	24.53	22.63	10.8	8.4	129.1	0.1753	39.22	69.7	
2	21.95	13.04	23.74	21.74	11.7	9.2	126.8	0.1714	39.63	68.9	
3	22.57	13.41	24.38	22.35	11.5	9.1	127.1	0.1757	39.40	70.2	
Average	**22.44**	**13.35**	**24.22**	**22.24**	**11.3**	**8.9**	**127.7**	**0.1741**	**39.41**	**69.6**	

**Received weight determined at the time of unit delivery to the job site or from units sampled at that time and delivered to the laboratory in sealed containers for moisture content determination.

Remarks: The units were tested according to ASTM C140. This set meets the absorption and compressive strength requirements of ASTM C90
NCMA 7-1C Fire Rating = 0.9 hours, based on the client supplied mix design.
This report shall not be reproduced, except in full, without prior written approval from Pennoni. The above results relate only to the items tested.
Samples were obtained and delivered to the lab by the client.

Chas M. Snyder, PE
Laboratory Manager

Pennoni
PENNONI ASSOCIATES INC.
CONSULTING ENGINEERS

Project No.: **YORKX-19001**

Report Date: **October 29, 2021**

Client: **York Building Products Company**
Address: **Sam Cooke**
950 Smile Way
York, PA 17404

Project Name: **York Building Products Company**

Date Received: **October 6, 2021**

Date of Compression Testing: **October 29, 2021**

Date of Absorption Testing: **October 27, 2021**

Unit Specification: **ASTM C90**

Unit Designation and Description: **Concrete Masonry Unit**
8" x 8" x 16", Hollow, Normal Weight
Frederick Plant

Testing Technician: **A S Konte**

Laboratory Number:**10- 194880**

Summary of Test Results

Physical Property	Specification Values	Average Test Results		Physical Property	Specification Values	Average Test Results	
Net Compressive Strength (min.)	2000	**2520**	*psi*	Min. Faceshell Thickness (FST)	1.25	**1.30**	*in.*
Gross Compressive Strength		**1250**	*psi*	Min. Web Thickness (WT)	0.750	**1.22**	*in.*
Density		**128.2**	*pcf*	Equivalent Web Thickness		**2.80**	*in.*
Absorption (max.)	13	**10.4**	*pcf*	Equivalent Thickness		**3.83**	*in.*
Percent Solid		**50.0**	*%*	Normalized Web Area	6.5	**33.6**	$in.^2/ft.^2$
Net Cross-Sectional Area		**59.90**	$in.^2$	Max. Var. From Spec. Dimensions			*in.*
Gross Cross-Sectional Area		**119.75**	$in.^2$	Moisture Content			*%*

Individual Unit Test Results

Compression Units

Specimen No.	Received Wt, W_R	Cross-Sectional Area		Max. Load	Compressive Strength	
		Gross	Net*		Gross	Net
	lb.	$in.^2$	$in.^2$	*lb*	*psi*	*psi*
4	35.16	120.15	59.71	149580	1240	2500
5	33.98	119.38	59.82	153090	1280	2550
6	34.47	119.73	59.63	150000	1250	2510
Average	**34.54**	**119.75**	**59.72**	**150890**	**1250**	**2520**

* Net area determined from absorption specimens unless solid units are used.

Absorption Units

Specimen No.	Average Width	Average Height	Average Length	Average Min. FST	Average Min. WT	Normalized Web Area
	in.	*in.*	*in.*	*in.*	*in.*	$In.^2/ft^2$
1	7.66	7.68	15.63	1.31	1.22	33.6
2	7.64	7.65	15.63	1.29	1.21	33.5
3	7.65	7.67	15.63	1.31	1.22	33.7
Average	**7.65**	**7.67**	**15.63**	**1.30**	**1.22**	**33.6**

Specimen No.	Received Wt, W_R**	Immersed Wt, W_I	Saturated Wt, W_S	Oven-Dry Wt, W_D	Absorption		Density	Net Volume	Net Area	Percent Solid	Moisture Content** % of total absorption
	lb	*lb*	*lb*	*lb*	*pcf*	*%*	*pcf*	ft^3	in^2	*%*	
1	34.72	20.47	37.09	34.43	10.0	7.7	129.3	0.2663	59.75	50.1	
2	33.69	19.82	36.33	33.40	11.1	8.8	126.2	0.2645	59.94	50.0	
3	34.51	20.39	36.94	34.26	10.1	7.8	129.2	0.2651	59.78	50.0	
Average	**34.31**	**20.23**	**36.79**	**34.03**	**10.4**	**8.1**	**128.2**	**0.2653**	**59.82**	**50.0**	

**Received weight determined at the time of unit delivery to the job site or from units sampled at that time and delivered to the laboratory in sealed containers for moisture content determination.

Remarks: The units were tested according to ASTM C140. This set meets the absorption and compressive strength requirements of ASTM C90
NCMA 7-1C Fire Rating = 1.9 hours, based on the client supplied mix design.
This report shall not be reproduced, except in full, without prior written approval from Pennoni. The above results relate only to the items tested.
Samples were obtained and delivered to the lab by the client.

Chas M. Snyder, PE
Laboratory Manager

Heidelberg Materials

Union Bridge Plant
675 Quaker Hill Rd
Union Bridge, Md 21791

Mt St Mary's COAD Science Bldg. Addition
Robert W. Sheckles, Inc (masonry contractor)
Spec Section: 042000
Material Submitted: mortar for std cmu

03/15/2023

YORK BUILDING PRODUCTS CO INC

Job: Mt St Mary's COAD Science Building
Contractor: JEM Group
Masonry: RW Sheckles Inc.
Architect: Stantec

Subject: Cement Certification

Dear Heidelberg Materials Customer,

Heidelberg Materials certifies that at time of shipment, masonry cement designated as Type S manufactured at the Union Bridge, Maryland plant conforms to the standard physical requirements of the current Standard Specification for Masonry Cement of ASTM C 91 for Type S masonry cement.

Accordingly, the designated cements may be used in preparation of ASTM C 270 Type S mortar without further addition of cements or hydrated lime.

This certification is limited to the language above and carries no other express or implied warranties or representations. This certification is applicable for the calendar year 2023.

Yours Truly,

Kagan Hoffman
Quality Control Manager

LEHIGH
HEIDELBERGCEMENT Group

Mill Test Certificate Report

Type: Masonry S

Test Period: **08-Jan-2022**
To: **28-Mar-2022**

Certification

Lehigh Cement Company, LLC certifies that at time of shipment, masonry cement designated as Type S manufactured at the Union Bridge, Maryland plant conforms to the standard physical requirements of the current Standard Specification for Masonry Cement of ASTM C 91 for Type S masonry cement. This certification carries no other express or implied warranties and Lehigh Cement Company LLC, is not responsible for improper use or workmanship of the described cement.

General Information

Supplier:	Lehigh Cement Company LLC	**Source Location:**	Union Bridge Plant
Address:	675 Quaker Hill Rd.	**Contact:**	Customer Service
	Union Bridge, Md. 21791	**Telephone:**	800-638-1716

Test Data on ASTM Physical Requirements

Item	Limit	Result
Fineness, residue on a 45 µm (No. 325) sieve, %	not more than 24	1
Autoclave Expansion, %	not more than 1.0	0.1
Initial time of setting by Gillmore, minutes	not less than 90, not more than 1000	264
Compressive Strengths, MPa		
7 days, MPa	not less than 9.0	11.7
28 days, MPa	not less than 14.5	15.2
Compressive Strengths, psi		
7 days, psi	not less than 1300	1,695
28 days, psi	not less than 2100	2,205
Air Content of Mortar, %	not less than 8, not more than 19	16
Water Retention Value, % of original flow	not less than 70	84

Notes

05/10/22
Date

Brandon Eckard

Quality Control Manager: Brandon Eckard

Mt St Mary's COAD Science Bldg. Addition
Robert W. Sheckles, Inc (masonry contractor)
Spec Section: 042000 – 2.1 & Dwg S000-Ivany.1
Material Submitted: cmu - ivany

March 15, 2023

Robert W Sheckles, Inc
4608 Wedgewood Blvd
Frederick, MD 21703

CERTIFICATION

PROJECT: Mt St Mary's COAD Science Building

ARCHITECT: Stantec

GENERAL CONTRACTOR: JEM Group

MASONRY CONTRACTOR: Robert W Sheckles, Inc

We herewith certify that "Ivany" Open End Concrete Masonry units to be supplied for the above referenced project are made from crushed limestone aggregate meeting requirements of ASTM C-33, and that minimum compressive strength of units is 3,000 psi net. Ivany block comply fully with the ASTM designations as follow:

C90-11b: Specification for Load Bearing Concrete Masonry Units
Product: Ivany Open End Concrete Masonry Units

Respectfully submitted,
YORK BUILDING PRODUCTS CO., INC.

Brian Reilly
Sales Representative

950 Smile Way, York PA 17404
Phone: 717-848-2831 FAX: 717-854-9156
www.yorkbuilding.com

Pennoni
PENNONI ASSOCIATES INC.
CONSULTING ENGINEERS

Project No.: **YORKX-19001**

Report Date: **April 23, 2020**

Client: **York Building Products Company**
Address: **Sam Cooke**
950 Smile Way
York, PA 17404

Project Name: **York Building Products**

Date Received: **March 5, 2020**

Date of Compression Testing: **April 23, 2020**

Date of Absorption Testing: **March 19, 2020**

Unit Specification: **ASTM C90**

Unit Designation and Description: **Concrete Masonry Unit**
8x8x16" Ivany, Normal Weight
Loucks Mill Plant

Testing Technician: **TRex**

Laboratory Number: **10- 180139**

Summary of Test Results

Physical Property	Specification Values	Average Test Results		Physical Property	Specification Values	Average Test Results	
Net Compressive Strength (min.)	2000	**4260**	*psi*	Min. Faceshell Thickness (FST)	1.25	**1.32**	*in.*
Gross Compressive Strength		**2100**	*psi*	Min. Web Thickness (WT)	0.750	**1.38**	*in.*
Density		**130.0**	*pcf*	Equivalent Web Thickness		**3.18**	*in.*
Absorption (max.)	13	**10.0**	*pcf*	Equivalent Thickness		**3.66**	*in.*
Percent Solid	3900 TMS 602	**47.8**	*%*	Normalized Web Area	6.5	**25.4**	$in.^2/ft.^2$
Net Cross-Sectional Area		**57.18**	$in.^2$	Max. Var. From Spec. Dimensions			*in.*
Gross Cross-Sectional Area		**119.64**	$in.^2$	Moisture Content			*%*

Individual Unit Test Results **Tests conducted on reduced size units.**

Compression Units

Specimen No.	Received Wt, W_R	Cross-Sectional Area Gross	Cross-Sectional Area Net*	Max. Load	Compressive Strength Gross	Compressive Strength Net
	lb.	$in.^2$	$in.^2$	*lb*	*psi*	*psi*
4		119.53	59.37	248175	2070	4170
5		119.80	59.00	273910	2280	4640
6		119.57	59.11	235435	1960	3980
Average		**119.64**	**59.16**	**252510**	**2100**	**4260**

* Net area determined from absorption specimens unless solid units are used.

Absorption Units

Specimen No.	Average Width	Average Height	Average Length	Average Min. FST	Average Min. WT	Normalized Web Area
	in.	*in.*	*in.*	*in.*	*in.*	$In.^2/ft^2$
1	7.66	5.43	15.60	1.32	1.36	25.1
2	7.65	5.53	15.62	1.32	1.39	25.6
3	7.66	5.60	15.62	1.31	1.39	25.5
Average	**7.66**	**5.52**	**15.61**	**1.32**	**1.38**	**25.4**

Specimen No.	Received Wt, W_R**	Immersed Wt, W_I	Saturated Wt, W_S	Oven-Dry Wt, W_D	Absorption		Density	Net Volume	Net Area	Percent Solid	Moisture Content** % of total absorption
	lb	*lb*	*lb*	*lb*	*pcf*	*%*	*pcf*	ft^3	in^2	*%*	
1	33.26	14.06	25.44	23.62	10.0	7.7	129.5	0.1823	60.47	48.0	
2	33.95	14.84	26.81	24.88	10.1	7.8	129.7	0.1918	59.37	48.4	
3	32.85	15.30	27.49	25.53	10.0	7.7	130.7	0.1953	58.58	47.0	
Average	**33.35**	**14.73**	**26.58**	**24.68**	**10.0**	**7.7**	**130.0**	**0.1898**	**59.47**	**47.8**	

**Received weight determined at the time of unit delivery to the job site or from units sampled at that time and delivered to the laboratory in sealed containers for moisture content determination.

Remarks: The units were tested according to ASTM C140. This set meets the absorption and compressive strength requirements of ASTM C90
NCMA 7-1C Fire Rating = 1.7 hours, based on the client supplied mix design.
This report shall not be reproduced, except in full, without prior written approval from Pennoni. The above results relate only to the items tested.
Samples were obtained and delivered to the lab by the client.

Chas M. Snyder, PE
Laboratory Manager

Pennoni
PENNONI ASSOCIATES INC.
CONSULTING ENGINEERS

Project No.: **YORKX-19001**

Report Date: **February 6, 2020**

Client: **York Building Products Company**
Address: **Sam Cooke**
950 Smile Way
York, PA 17404

Project Name: **York Buiilding Products**

Date Received: **December 20, 2019**

Date of Compression Testing: **February 6, 2020**

Date of Absorption Testing: **February 6, 2020**

Unit Specification: **ASTM C90**

Unit Designation and Description: **Concrete Masonry Unit**
12x8x16", Ivany, Normal Weight
Loucks Mill

Testing Technician: **TRex**

Laboratory Number: **10- 178324**

Summary of Test Results

Physical Property	Specification Values	Average Test Results		Physical Property	Specification Values	Average Test Results	
Net Compressive Strength (min.)	2000	**4950**	*psi*	Min. Faceshell Thickness (FST)	0.75	**1.26**	*in.*
Gross Compressive Strength		**4680**	*psi*	Min. Web Thickness (WT)	0.750	**1.44**	*in.*
Density		**138.0**	*pcf*	Equivalent Web Thickness		**8.59**	*in.*
Absorption (max.)	13	**7.6**	*pcf*	Equivalent Thickness		**4.68**	*in.*
Percent Solid	3900 TMS 602	**40.2**	*%*	Normalized Web Area	6.5	**26.6**	$in.^2/ft.^2$
Net Cross-Sectional Area		**72.81**	$in.^2$	Max. Var. From Spec. Dimensions			*in.*
Gross Cross-Sectional Area		**181.08**	$in.^2$	Moisture Content			*%*

Individual Unit Test Results **Tests conducted on reduced size units.**

Compression Units

Specimen No.	Received Wt, W_R	Cross-Sectional Area Gross	Cross-Sectional Area Net*	Max. Load	Compressive Strength Gross	Compressive Strength Net
	lb.	$in.^2$	$in.^2$	*lb*	*psi*	*psi*
4	42.53	9.34	8.58	44600	4770	5190
5	42.91	9.36	8.80	42969	4580	4880
6	42.60	9.27	9.14	43749	4710	4780
Average	**42.68**	**9.32**	**8.84**	**43770**	**4680**	**4950**

* Net area determined from absorption specimens unless solid units are used.

Absorption Units

Specimen No.	Average Width	Average Height	Average Length	Average Min. FST	Average Min. WT	Normalized Web Area
	in.	*in.*	*in.*	*in.*	*in.*	$In.^2/ft^2$
1	1.53	2.88	6.01	1.20	1.40	25.9
2	1.54	2.97	6.02	1.29	1.46	27.0
3	1.53	3.09	6.04	1.29	1.45	26.8
Average	**1.53**	**2.98**	**6.02**	**1.26**	**1.44**	**26.6**

Specimen No.	Received Wt, W_R**	Immersed Wt, W_I	Saturated Wt, W_S	Oven-Dry Wt, W_D	Absorption		Density	Net Volume	Net Area	Percent Solid	Moisture Content** % of total absorption
	lb	*lb*	*lb*	*lb*	*pcf*	*%*	*pcf*	ft^3	in^2	*%*	
1	42.72	1.24	2.16	2.05	7.5	5.4	139.0	0.0147	9.26	39.0	
2	42.74	1.30	2.28	2.16	7.6	5.6	137.5	0.0157	8.98	42.7	
3	42.13	1.31	2.30	2.18	7.6	5.5	137.4	0.0159	8.65	38.9	
Average	**42.53**	**1.28**	**2.25**	**2.13**	**7.6**	**5.5**	**138.0**	**0.0154**	**8.96**	**40.2**	

**Received weight determined at the time of unit delivery to the job site or from units sampled at that time and delivered to the laboratory in sealed containers for moisture content determination.

Remarks: The units were tested according to ASTM C140. This set meets the absorption and compressive strength requirements of ASTM C90
NCMA 7-1C Fire Rating = 2.6 hours, based on the client supplied mix design.
This report shall not be reproduced, except in full, without prior written approval from Pennoni. The above results relate only to the items tested.
Samples were obtained and delivered to the lab by the client.

Chas M. Snyder, PE
Laboratory Manager

Pennoni

PENNONI ASSOCIATES INC.
CONSULTING ENGINEERS

Project No.: **YORKX-19001**

Report Date: **April 16, 2020**

Client: **York Building Products Company**
Address: **Sam Cooke**
950 Smile Way
York, PA 17404

Project Name: **York Building Products**

Date Received: **March 5, 2020**

Date of Compression Testing: **April 15, 2020**

Unit Specification: **ASTM C90**

Date of Absorption Testing: **March 19, 2020**

Unit Designation and Description: **Concrete Masonry Unit**
16x8x16" Ivany, Normal Weight
Loucks Mill Plant

Testing Technician: **TRex**

Laboratory Number: **10- 180140**

Summary of Test Results

Physical Property	Specification Values	Average Test Results		Physical Property	Specification Values	Average Test Results	
Net Compressive Strength (min.)	2000	**4520**	*psi*	Min. Faceshell Thickness (FST)	0.75	**1.56**	*in.*
Gross Compressive Strength		**3310**	*psi*	Min. Web Thickness (WT)	0.750	**1.41**	*in.*
Density		**135.4**	*pcf*	Equivalent Web Thickness		**6.08**	*in.*
Absorption (max.)	13	**8.2**	*pcf*	Equivalent Thickness		**5.64**	*in.*
Percent Solid		**71.7**	*%*	Normalized Web Area	6.5	**25.9**	$in.^2/ft.^2$
Net Cross-Sectional Area	[test coupon]	**8.99**	$in.^2$	Max. Var. From Spec. Dimensions			*in.*
Gross Cross-Sectional Area	[test coupon]	**12.54**	$in.^2$	Moisture Content			*%*

3900 TMS 602

Individual Unit Test Results **Tests conducted on reduced size units.**

Compression Units

Specimen No.	Received Wt, W_R	Cross-Sectional Area Gross	Cross-Sectional Area Net*	Max. Load	Compressive Strength Gross	Compressive Strength Net
	lb.	$in.^2$	$in.^2$	*lb*	*psi*	*psi*
4		12.41	9.43	40678	3270	4310
5		12.35	8.88	42791	3460	4810
6		12.85	9.25	41155	3200	4450
Average		**12.54**	**9.18**	**41540**	**3310**	**4520**

* Net area determined from absorption specimens unless solid units are used.

Absorption Units

Specimen No.	Average Width	Average Height	Average Length	Average Min. FST	Average Min. WT	Normalized Web Area
	in.	*in.*	*in.*	*in.*	*in.*	$In.^2/ft^2$
1	1.60	2.95	8.39	1.56	1.41	25.9
2	1.51	2.86	8.28	1.56	1.42	26.1
3	1.47	3.02	8.29	1.56	1.40	25.8
Average	**1.53**	**2.94**	**8.32**	**1.56**	**1.41**	**25.9**

Specimen No.	Received Wt, W_R**	Immersed Wt, W_I	Saturated Wt, W_S	Oven-Dry Wt, W_D	Absorption		Density	Net Volume	Net Area	Percent Solid	Moisture Content** % of total absorption
	lb	*lb*	*lb*	*lb*	*pcf*	*%*	*pcf*	ft^3	in^2	*%*	
1	52.60	1.29	2.30	2.16	8.6	6.5	133.4	0.0162	9.07	70.8	
2	51.22	1.20	2.12	2.00	8.1	6.0	135.7	0.0147	9.36	71.3	
3	51.53	1.28	2.25	2.13	7.7	5.6	137.0	0.0155	8.88	73.1	
Average	**51.78**	**1.26**	**2.22**	**2.10**	**8.2**	**6.0**	**135.4**	**0.0155**	**9.10**	**71.7**	

**Received weight determined at the time of unit delivery to the job site or from units sampled at that time and delivered to the laboratory in sealed containers for moisture content determination.

Remarks: The units were tested according to ASTM C140. This set meets the absorption and compressive strength requirements of ASTM C90
NCMA 7-1C Fire Rating = 3.7 hours, based on the client supplied mix design.
This report shall not be reproduced, except in full, without prior written approval from Pennoni. The above results relate only to the items tested.
Samples were obtained and delivered to the lab by the client.

Chas M. Snyder, PE
Laboratory Manager

Heidelberg Materials

Evansville Plant
537 Evansville Rd.
Fleetwood, PA 19522

Mt St Mary's COAD Science Bldg. Addition
Robert W. Sheckles, Inc (masonry contractor)
Spec Section: 042000 – Dwg S000 – Ivany.4
Material Submitted: mortar for ivany cmu

03/15/2023

YORK BUILDING PRODUCTS CO INC

Job: Mt St Mary's COAD Science Building
Contractor: JEM Group
Masonry: RW Sheckles Inc
Architect: Stantec

Subject: Cement Certification

Dear Heidelberg Materials Customer,

Heidelberg Materials certifies that at time of shipment, masonry cement designated as Type M manufactured at the Evansville, Pa. plant conforms to the standard physical requirements of the current Standard Specification for Masonry Cement of ASTM C 91 for Type M masonry cement.

Accordingly, the designated cements may be used in preparation of ASTM C 270 Type M mortar without further addition of cements or hydrated lime.

This certification is limited to the language above and carries no other express or implied warranties or representations. This certification is applicable for the calendar year 2023.

Yours Truly,

John Di Sepio
Quality Control Manager

LEHIGH
HEIDELBERGCEMENT Group

Mill Test Certificate Report

Type: Masonry M

Test Period: 01-Apr-2021

To: 01-May-2022

Certification

Lehigh Cement Company, LLC certifies that at time of shipment, masonry cement designated as Type M manufactured at the Evnasville, Pennslyvania plant conforms to the standard physical requirements of the current Standard Specification for Masonry Cement of ASTM C 91 for Type M masonry cement. This certification carries no other express or implied warranties and Lehigh Cement Company LLC, is not responsible for improper use or workmanship of the described cement.

General Information

Supplier: Lehigh Cement Company LLC

Address: 537 Evansville Road

Fleetwood, PA 19522

Telephone: 610-926-1024

Source Location: Evansville Plant

Contact: Sales Office

Tests Data on ASTM "Standard" Physical Requirements

Item	Limit (%)	Result (%)	Item	Limit	Result
Fineness:			Compressive Strength:		
r45 µm (No. 325) Sieve (%)	24 max	0.30	7 Day (MPa)	12.4 min	20.6
Autoclave Expansion (%)	1.0 max	0.057	28 Day (MPa)	20.0 min	24.5
Gillmore Setting Time:			Compressive Strength:		
Initial Set (minutes)	not less than 90	250	7 Day (Psi)	1800 min	2985
			28 Day (Psi)	2900 min	3548
			Air Content of Mortar (%)	8 min / 19 max	13.6
			Water Retention Value (% of original flow)	70 min	75

Notes

05/01/22
Date

Quality Control Manager:

Mt St Mary's COAD Science Bldg. Addition
Robert W. Sheckles, Inc (masonry contractor)
Spec Section: 042000 – Dwg S000 – Ivany.5
Material Submitted: masonry grout (tower)

SPEC MIX®

Product Certification Letter

February 1, 2022

Product Description: 80 lb / 3000 lb SPEC MIX® CF-02 Core Fill Grout / Coarse
Item Number: 19002 / SM19002

To: Whom It May Concern

This letter certifies that SPEC MIX® CF-02 Core Fill Grout / Coarse will meet the specifications for ASTM C476, *Standard Specification for Grout for Masonry*, with compressive strength of 3000 PSI at 28 days when sampled and tested in accordance with ASTM C1019, *Standard Test Method for Sampling and Testing Grout for Masonry*, in standard laboratory conditions.

The raw materials used in this product formulation meeting the standard specifications may include: Portland Cement meeting ASTM C150, *Standard Specification for Portland Cement*, Blended Cement meeting ASTM C595, *Standard Specification for Blended Hydraulic Cement*, Aggregates meeting ASTM C404, *Standard Specification for Aggregates for Masonry Grout* ***with the exception*** that minimal quantities of +1/2" material may be present in the coarse aggregate, Fly Ash meeting ASTM C618, *Standard Specification for Coal Fly Ash and Raw or Calcined Natural Pozzolan for use in Concrete,* and Hydrated Lime meeting ASTM C207, *Standard Specification for Hydrated Lime for Masonry Purposes*.

We are pleased to be of service to you. If you have any questions, please let us know.

Certified by:

THE QUIKRETE® COMPANIES, LLC
Technical and Engineering Center
500 Marathon Parkway
Lawrenceville, GA 30046
770.216.9580 • www.quikrete.com
651.994.7120 • www.specmix.com

SPEC MIX®

Material Test Report

Product Description:	SPEC MIX® CF-02 Core Fill Grout / Coarse
Item Number:	19002 / SM19002
Manufacturing Plant:	QUIKRETE® - Perryville

Sample Identification

Test Complete:	2/18/2022
Lab Code:	21-2770

Initial Testing

Test	Specification	Result
Water (%)	As required	12
Consistency (in)	8 - 11 slump	8
Unit Weight (lb/cu ft)	>125	137.1

Strength Testing

Test	Compressive Strength (PSI)	
Age	**Specification**	**Result**
7 day	1	3350
28 day	3000	3970

Other Testing

Test	Specification	Result
% retained 1/2 in sieve	*	7.0

(1) A value of 1 indicates that the property is being measured but no minimum value has been set
*** Record**

Certified by:

THE QUIKRETE® COMPANIES, LLC
Technical and Engineering Center
500 Marathon Parkway
Lawrenceville, GA 30046
770.216.9580 • www.quikrete.com
651.994.7120 • www.specmix.com

SPEC MIX®

04 DIVISION MORTAR

CORE FILL
MASONRY GROUT

High Strength. Structural Integrity.

In reinforced masonry, SPEC MIX® Core Fill Grout is used to fill cells of concrete masonry units and horizontal bond beams as well as the cavities of composite masonry construction. SPEC MIX Core Fill Grout is available in both Fine and Coarse designs to meet various project specifications. The Core Fill Grouts are dry, preblended products containing cementitious materials and dried aggregates formulated for superior flow to fill masonry voids and achieve required compressive strength while meeting ASTM C 476 and CSA A179 requirements for reinforced masonry construction. It is designed as a fluid, cohesive, cementitious material used to bond together adjacent masonry units and steel reinforcement to the masonry assemblage, or to fill reinforced bond beams. Using SPEC MIX Core Fill Grout in conjunction with existing structurally sound reinforcement will produce a structurally sound final wall system for reinforced masonry construction.

SPEC MIX Core Fill Grout is produced under strict manufacturing standards, and complete quality control measures are implemented with each batch. A digital printout displaying the proper proportions per batch may be kept as a permanent record. Submittals are available upon request for certification to applicable ASTM, TMS, and CSA standards.

TYPICAL MATERIALS

PORTLAND CEMENT
POZZOLANS
AGGREGATES

COARSE (CF-02)
FINE (CF-03)

6917098

SPEC MIX

CORE FILL MASONRY GROUT

INSTALLATION/APPLICATION

SPEC MIX® Core Fill Grout may be used in both low-lift and high-lift applications. Special consideration should be used in selecting the type of grout used for a particular application. Core Fill Grout may be placed by hand or by mechanical delivery. It should be consolidated upon placement and reconsolidated before initial set. Always check project specifications and structural notes to assure proper product selection has been made.

SPEC MIX Core Fill Grouts must be kept dry, covered and protected from weather and other damage.

SIZES AND EQUIPMENT

SPEC MIX Core Fill Grout is available in 80 lb (36.2 kg) packages for easy hand loading as well as in 3,000 lb (1,360.7 kg) reusable bulk bags to be used with the various SPEC MIX silo systems. When using the silo system, once the bulk bags of grout are delivered to the project site, the portable silo is loaded with a jobsite forklift and the product is dispensed into a mechanical batch mixer. (See silo operations manual.)

MIXING INSTRUCTIONS

WEAR IMPERVIOUS GLOVES, such as nitrile.

1. Use a mechanical batch mixer to ensure optimal workability and performance. Hand mixing grout should be permitted only with written approval by the specifier who should outline hand-mixing procedures.
2. Add the dry Core Fill Grout material to enough clean, potable water to obtain a flowable 8 in to 11 in (200 mm to 275 mm) slump complying with ASTM C 476 and local building codes.
3. When using a continuous mixing system, follow the mixer manufacturer's recommendations. An 8 in to 11 in (200 mm to 275 mm) slump must be achieved.
4. Mixing times should remain consistent batch to batch.
5. In general, mix only the amount of material that can be used within one hour of initial mixing.

LIMITATIONS

SPEC MIX Core Fill Grout should be installed in accordance with the provisions of the local building code and applicable ASTM, TMS, and CSA standards. Good workmanship coupled with proper detailing and design assures durable, functional, watertight construction.

ASTM C 476 PROPERTY SPECIFICATIONS (LABORATORY PREPARED)

	Slump	Strength (28 days Min)
Coarse	8 in to 11 in (200 mm to 275 mm)	3,000 PSI (20.6 MPa)
Fine	8 in to 11 in (200 mm to 275 mm)	3,000 PSI (20.6 MPa)

CSA A179 PROPERTY SPECIFICATIONS (LABORATORY PREPARED)

	Slump	Strength (28 days Min)
Coarse	8 in to 11 in (200 mm to 275 mm)	3,000 PSI (20.6 MPa)
Fine	8 in to 11 in (200 mm to 275 mm)	3,000 PSI (20.6 MPa)

ESTIMATED YIELDS PER 80 lb (36.2 kg) BAG

Unit Size	Blocks Filled	Cores Filled
6 in (150 mm) Block	3.4 to 3.8	6.8 to 7.6
8 in (200 mm) Block	2.5 to 2.9	5.0 to 5.8
10 in (250 mm) Block	2.1 to 2.3	4.2 to 4.6
12 in (300 mm) Block	1.7 to 1.9	3.4 to 3.8

ESTIMATED YIELDS PER 3,000 lb (1,360.7 kg) BULK BAG

Unit Size	Blocks Filled	Cores Filled
6 in (150 mm) Block	125 to 142	255 to 285
8 in (200 mm) Block	93 to 110	185 to 218
10 in (250 mm) Block	78 to 85	155 to 170
12 in (300 mm) Block	63 to 70	128 to 140

Note: The yields given above are approximate and depend on labor practices, site conditions and design of work. Yields include typical waste. Please contact your local representative for more specific yield information in your area.

Grout Type [1]	Max. grout pour height ft (m)	Min. width of grout space [2,3] in. (mm)	Min. grout space dimensions for grouting cells of hollow unites [3,4] in. x in. (mm x mm)
Fine	1 (0.30)	3/4 (19.1)	1 1/2 x 2 (38.1 x 50.8)
Fine	5 (1.52)	2 (50.8)	2 x 3 (50.8 x 76.2)
Fine	12 (3.66)	2 1/2 (63.5)	2 1/2 x 3 (63.5 x 76.2)
Fine	24 (7.32)	3 (76.2)	3 x 3 (76.2 x 76.2)
Coarse	1 (0.30)	3/4 (19.1)	1 1/2 x 3 (38.1 x 76.2)
Coarse	5 (1.52)	2 (50.8)	2 1/2 x 3 (63.5 x 76.2)
Coarse	12 (3.66)	2 1/2 (63.5)	3 x 3 (76.2 x 76.2)
Coarse	24 (7.32)	3 (76.2)	3 x 4 (76.2 x 102)

1. Fine and coarse grouts are defined in ASTM C 476
2. For grouting between masonry wythes
3. Grout space dimension is the clear dimension between any masonry protrusion and shall be increased by the diameters of the horizontal bars within the cross sectrion of the grout space.
4. Area of vertical reinforcement shall not exceed 6 percent of the area of the grout space.

Follow proper cold-weather and hot-weather masonry procedures at temperatures below 40 °F (4 °C) or above 100 °F (38 °C) respectively.

LIMITED PRODUCT WARRANTY

IN THE UNITED STATES

NOTICE: Obtain the applicable LIMITED WARRANTY at www.specmix.com/product-warranty or send a written request to SPEC MIX, LLC, Five Concourse Parkway, Atlanta, GA 30328, USA.

AVISO: Obtenga la GARANTÍA LIMITADA correspondiente en www.specmix.com/product-warranty o envíe una solicitud por escrito a SPEC MIX, LLC, Five Concourse Parkway, Atlanta, GA 30328, USA.

IN CANADA

NOTICE: Obtain the applicable LIMITED WARRANTY at www.specmix.com/product-warranty. Or send a written request to SPEC MIX, LLC, Five Concourse Parkway, Atlanta, GA 30328, USA.

AVIS: Obtenez la GARANTIE LIMITÉE applicable sur www.specmix.com/produit-garantie/. Ou envoyez une demande écrite à SPEC MIX, LLC, Five Concourse Parkway, Atlanta, GA 30328, USA.

TECHNICAL SUPPORT

- CONTACT YOUR LOCAL SPEC MIX® MANUFACTURER
- VISIT WWW.SPECMIX.COM
- CONTACT SPEC MIX®
  PHONE: 888-773-2649 FAX: 651-454-5315

SPEC MIX PRODUCTS ARE PRODUCED BY ITS MANUFACTURING FACILITIES THROUGHOUT THE U.S. AND CANADA. EACH MANUFACTURER ADHERES TO A STRICT QUALITY ASSURANCE PROGRAM TO ENSURE COMPLETE QUALITY CONTROL IN EVERY BATCH.
© 2020 SPEC MIX

Mt St Mary's COAD Science Bldg. Addition
Robert W. Sheckles, Inc (masonry contractor)
Spec Section: 042000 – Dwg S000 – Ivany.5
Material Submitted: masonry grout (truck)

Schuster Concrete Ready Mix, LLC

REQUIRED FORMAT FOR PRODUCERS' SUBMITTAL CONCRETE MIX DESIGN

Date	01/07/22		
Contractor	RW Sheckles		
Project	Various Locations - 2022		
Use	BLOCK FILL	**PSI @ 28 days**	3000
Mix Code	30A2T3P	**Descriptors**	3000 AE PG PT HR 2P BF
Max.W/C	0.54	**Max.Water/lbs**	325
Slump/in.	6.0 +/- 2.0	**Total Air %**	5.0 +/- 1.5

MATERIALS	PROPORTIONING			SOURCE OF SUPPLY	
30A2T3P	**SATURATED SURFACE DRY WEIGHT IN LBS**	**YIELD CUBIC FEET**	**SPECIFIC GRAVITY (BULK S.S.D.)**	**SEE ATTACHED CERTIFICATES OF CONFORMANCE**	
ASTM C-150 Cement	450	2.29	3.15	Portland Type I/II	
ASTM C-989 GGBFS	150	0.82	2.92	Slag / Grade 120	
Total Cementitious Material	*600*		*Cement 75%*	*Slag 25%*	*FlyAsh 0%*
ASTM C-33 Pea Gravel	1050	6.52	2.58	Coarse Aggregate	
ASTM C-33 Sand	1765	10.88	2.60	Fine Aggregate	
ASTM C-94 Water	325	5.21	1.00	Potable	
AIR CONTENT		1.35			
ADMIXTURES			**PRODUCT NAME**	**ADMIXTURE SUPPLIER**	
ASTM C-260 Entrained Air	plant adjusted		AEA 14	Sika	
ASTM C-494 Type A WR	4.0 oz./cwt.		Plastocrete 250	Sika	
ASTM C-494 Type F WR	3.0 oz./cwt.		ViscoCrete 2100	Sika	
	TOTAL	27.07			

Producer / Plant	Schuster Concrete Ready Mix, LLC
Submitted By:	Brian Thompson

Compressive Strength of Laboratory Prepared Concrete

Description: Portland Cement/ Ground Granulated Blast Furnace Slag RAM
Air Entrained

Laboratory trial batches performed under the supervision of Rodney Meyers, P.E. (Maryland No. 19549)

1.0 Standards and Documents

ASTM C 192 Practice for Making and Curing Concrete Test Specimens in the Laboratory
ASTM C 39 Compressive Strength of Cylindrical Concrete Specimens

2.0 Source of Materials

Portland Cement, Type I/II, ASTM C 150
Ground Granulated Blast Furnace Slag, ASTM C 989
Fine Aggregate, ASTM C 33
Coarse Aggregate, Gravel, ASTM C 33
Type A Admixture, ASTM C 494
Air Entraining Admixture, ASTM C 260

3.0 Proportions of Constituent Materials, Plastic Properties and Compressive Strength

		Mix A	Mix B	Mix C
Proportions of constituent materials, per cubic yard				
Portland Cement	lb-dry	275	367	458
GGBFS	lb-dry	148	197	247
Total Cement	lb-dry	423	564	705
Concrete Sand	lb-ssd	1,380	1,274	1,164
Gravel	lb-ssd	1,625	1,625	1,625
Water	lb	280	283	285
Air Entrain. Admix	oz/100#	0.25	0.5	0.6
Type A, WR	oz/100#	5.0	5.0	5.0
Plastic properties				
Slump	inches	4.50	4.75	4.75
Air Content	%	6.00	6.50	6.50
Concrete Temp.	F	76	74	76
Water/cement	by wt	0.662	0.502	0.404
Compressive Strength Data				
7-day compressive strength				
Specimen 1	psi	2,030	3,700	5,330
Specimen 2	psi	1,990	3,500	4,940
Average	psi	2,010	3,600	5,170
28-day compressive strength				
Specimen 1	psi	2,790	4,700	6,210
Specimen 2	psi	2,950	4,660	5,970
Specimen 3	psi	2,790	4,820	6,690
Average	psi	2,840	4,730	6,290

Rodney Meyers, P.E., CDT

Description: Portland Cement/ Ground Granulated Blast Furnace Slag
Air Entrained

4.0 Compressive Strength vrs Ratio of Water-Cementitious Materials

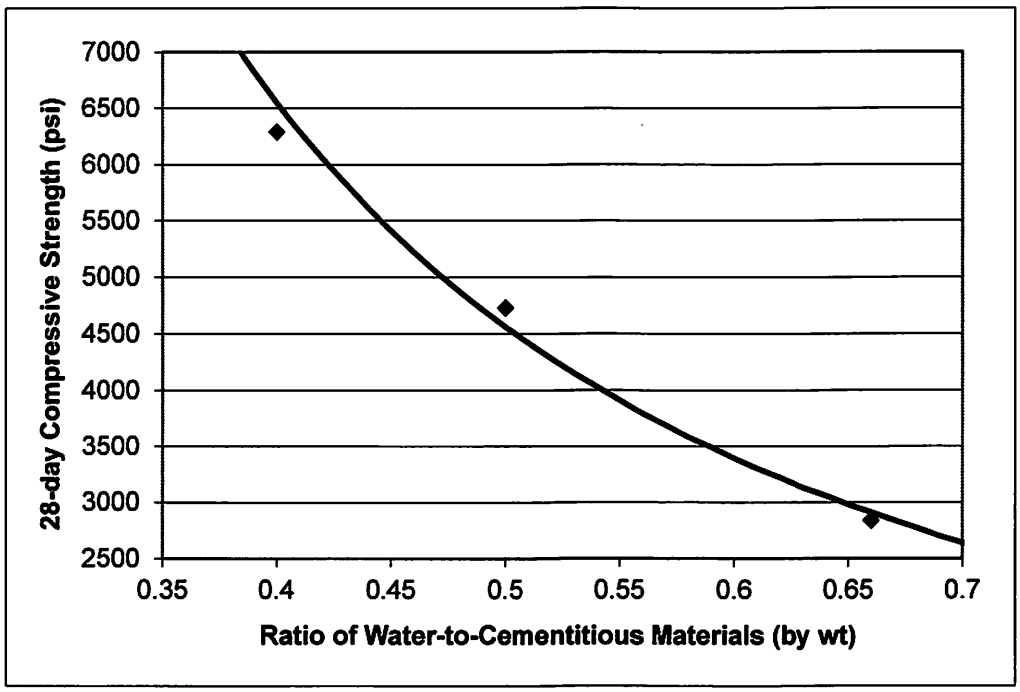

5.0 Best-Fit Equation for 28-day Compressive Strength As Function of w/cm

$f_c = A * (w/cm)^b$

A= 1480.8393 f_c = compressive strength, psi

b= -1.6230219 w/cm = water-to-cementitious materials, by wt

6.0 Maximum Ratios of Water-to-Cementitious Materials

f'_c = 28-day specified compressive strength

f'_{cr} = 28-day required average strength

f'_c	f'_{cr}	Max w/cm
2,500	3,500	0.650
3,000	4,200	0.650
3,500	4,700	0.491
4,000	5,200	0.461
4,500	5,700	0.436
5,000	6,200	0.414

Required average strength, f'_{cr}, from ACI 301, Table 5.3.2.2

f'_c, psi	f'_{cr}, psi
Less than 3000	f'_c + 1,000
3000 to 5000	f'_c + 1,200
Over 5000	1.1 * f'_c + 700

Rodney Meyers, P.E., CDT

Schuster Concrete Ready Mix, LLC

REQUIRED FORMAT FOR PRODUCERS' SUBMITTAL CONCRETE MIX DESIGN

Date	01/07/22		
Contractor	RW Sheckles		
Project	Various Locations - 2022		
Use	Block Fill	**PSI @ 28 days**	3000
Mix Code	30N2S3P	**Descriptors**	3000 NA PG PS WR HR 2P
Max.W/C	0.55	**Max.Water/lbs**	350
Slump/in.	8.0+/-2.0	**Total Air %**	2.0+/-1.5

MATERIALS	**PROPORTIONING**			**SOURCE OF SUPPLY**	
30N2S3P	**SATURATED SURFACE DRY WEIGHT IN LBS**	**YIELD CUBIC FEET**	**SPECIFIC GRAVITY (BULK S.S.D.)**	**SEE ATTACHED CERTIFICATES OF CONFORMANCE**	
ASTM C-150 Cement	375	1.91	3.15	Portland Type I/II	
ASTM C-989 GGBFS	125	0.69	2.92		
ASTM C-618 Fly Ash	125	0.91	2.20		
Total Cementitious Material	*800*		*Cement 60%*	*Slag 20%*	*FlyAsh 20%*
ASTM C-33 Pea Gravel	1000	6.21	2.58	Coarse Aggregate	
ASTM C-33 Sand	1900	11.71	2.60	Fine Aggregate	
ASTM C-94 Water	325	5.21	1.00	Potable	
AIR CONTENT		0.54			
ADMIXTURES			**PRODUCT NAME**	**ADMIXTURE SUPPLIER**	
ASTM C-494 Type A WR	3.0 oz./cwt.		Plastocrete 161	Sika	
ASTM C-494 Type F HR	3.0 oz./cwt.		ViscoCrete 2100	Sika	
	TOTAL	27.18			

Producer / Plant Schuster Concrete Ready Mix, LLC / Hagerstown and Jessup Plants

Submitted By: Brian Thompson

Grout for Unit Masonry

1.0 Mix Design

Constituent Material	Unit per cubic yard	Batch weight	parts
Portland Cement	**lb-dry**	**300**	
GGBFS	**lb-dry**	**150**	
Fly Ash	**lb-dry**	**150**	
Total Cement	**lb-dry**	**600**	**1.0**
Sand	**lb-ssd**	**1840**	**2.6**
No. 8 Coarse Aggregate	**lb-ssd**	**800**	**1.2**
Water	**lb**	**450**	
HRWRA	**oz/100#c**	**6.0**	

2.0 Proportioning Requirements

ASTM C 476 Standard Specifications for Grout for Masonry

Proportions – Table 1

ASTM C1019 28-day Compressive Strength: 2,000 psi*

ASTM C143 Slump: 8 to 11 inches

Permitted by ASTM C476 Section 3.0, the grout is proportioned with Type I/II portland cement (3.1.1.1) meeting the requirements of ASTM C150, fly ash (3.1.1.5) meeting the requirements of ASTM C618, and ground granulated blast furnace slag meeting the requirements of ASTM C989 (3.1.1.6). Due inventory and production limitations associated with the production of ready mixed concrete, the aggregates conform to ASTM C33.

C 476 – 09

TABLE 1 Conventional Grout Proportions by Volume

Type	Parts by Volume of Portland Cement or Blended Cement	Parts by Volume of Hydrated Lime or Lime Putty	Aggregate, Measured in a Damp, Loose Condition	
			Fine	Coarse
Fine grout	1	0–1/10	2¼ –3 times the sum of the volumes of the cementitious materials	. . .
Coarse grout	1	0–1/10	2¼ –3 times the sum of the volumes of the cementitious materials	1–2 times the sum of the volumes of the cementitious materials

RE: Masonry Grout for Filling Cores in Masonry Walls

3.0 Laboratory Test Data

Constituent material	per cu yd	Batch weight	parts
Portland cement	lb-dry	280	
GGBFS	lb-dry	140	
Fly ash	lb-dry	140	
Total cement		560	1.0
Sand	lb-ssd	1890	2.8
No. 8 coarse aggregate	lb-ssd	750	1.2
Water	lb	450	
HRWRA	oz/100#c	5.5	
Plastic Properties			
Slump C143	inches	11.0	
Air content	%	1.5	
ASTM C1019 Compressive Strength			
7-day			
Specimen 1	psi	2,390	
Specimen 2	psi	2,500	
Specimen 3	psi	2,470	
Average	psi	2,350	
28-day			
Specimen 1	psi	3,790	
Specimen 2	psi	3,440	
Specimen 3	psi	3,860	
Average	psi	3,700	

Rod Meyers, P.E., 8/22/13

RE: Masonry Grout for Filling Cores in Masonry Walls

ASTM C143 Slump: 11.0 inches

Grout molds for compressive strength testing with concrete masonry units.
Specimen mold: 3 inch. square, minimum.
Lined with permeable material (paper towels).

RE: Masonry Grout for Filling Cores in Masonry Walls

Mold filled in two layers. Each layer rodded 15 times.
Topped off within 20 to 30 minutes.

Specimens covered with moisture retaining material.
Specimens removed from molds between 24 to 48 hours.
Transported to lab within 8 hours. Moist cured until time of test.
A test is the average of three specimens, three at 7-days, three at 28-days.

LEHIGH
HEIDELBERGCEMENT Group

Lehigh Cement Company, LLC
675 Quaker Hill Road
Union Bridge, MD 21791
Phone: 1-800-638-1716
Fax: (410) 386-6316
www.lehighhanson.com

January 26, 2021

Schuster Concrete Ready Mix, LLC.
3717 Crondall Lane Suite B
Owings Mills, MD 21117

JOB:
GENERAL CONTRACTOR:
MASONRY CONTRACTOR:
ARCHITECT:

To whom it may concern:

Lehigh Cement Company, LLC certifies that at time of shipment, the portland cement designated as **Type I-II** manufactured at the **Union Bridge, Maryland** plant conforms to the **standard** composition and physical requirements of the current Standard Specification for Portland Cement of ASTM C-150 and AASHTO M85 for **Type I** and **Type II** portland cement.

This certification is limited to the language above and carries no other express or implied warranties or representations. This certification is applicable for the calendar year 2021.

Yours Truly,

Brandon Eckard
Quality Control Manager

CC: Files
Union Bridge Sales Office

LEHIGH
HEIDELBERGCEMENT Group

Mill Test Certificate Report

Type: I/II ASTM, I/II AASHTO

Grind Number: February-20

Test Period: 02/01/20 to: 02/29/20

Certification

Lehigh Cement Company, LLC certifies that at time of shipment, the portland cement designated as Type I – II manufactured at the Union Bridge, Maryland plant conforms to the standard composition and physical requirements of the current Standard Specification for Portland Cement of ASTM C 150 and AASHTO M85 for both Type I and Type II portland cement. This certification carries no other express or implied warranties and Lehigh Cement Company LLC, is not responsible for improper use or workmanship of the described cement.

General Information

Supplier: Lehigh Cement Company LLC
Address: 675 Quaker Hill Rd.
Union Bridge, MD 21791
Telephone: 800-638-1716

Source Location: Union Bridge Plant
Contact: Sales Office

Test Data on ASTM "Standard" Requirements

Chemical Requirements (ASTM C-150, Table 1)			Physical Requirements (ASTM C-150, Table 3)		
Item	Limit	Results	Item	Limit	Results
SiO_2	A	19.42	Fineness:		
Al_2O_3	6.0 Max	4.75	% Passing 45µm (No. 325)	A	96.99
Fe_2O_3	6.0 Max	3.19	Blaine Fineness (m^2/Kg)	260 min	375
CaO	A	62.50			
MgO	6.0 max	2.40	Autoclave Expansion (%)	0.8 max	0.05
SO_3	D	2.90	Vicat Setting Time:		
Loss on Ignition	3.5 max	3.16	Initial Set (minutes)	45 min	154
Na_2O	A	0.13			
K_2O	A	0.65	Air Content (%)	12 max	8.2
Insoluble Residue	1.5 max	0.45	Compressive Strengths Mpa:		
CO_2	A	1.85	1-Day	A	15.18
Limestone %	5.0 max	4.61	3-Day	12.0 min	26.54
$CaCO_3$ in Limestone	70% Min	91.3	7-Day	19.0 min	32.62
			28-Day	A	41.13
Potential Compounds:		Adjusted	Compressive Strengths, PSI:		
C_3S	A	56.59	1-Day	A	2201
C_2S	A	11.96	3-Day	1450 min	3849
C_3A	8 max	7.08	7-Day	2470 min	4730
C_4AF	A	9.64	28-Day	A	5964
$C_3S+4.75*C_3A$	<100	90	Mortar Bar Expansion, C-1038, %	Max 0.020	0.0035

Test Data on ASTM Optional Requirement

Chemical Requirements (ASTM C-150, Table 2)			Physical Requirements (ASTM C-150, Table 4)		
Item	Limit	Results	Item	Limit	Result
Equivalent Alkalies		0.55	False Set	Min 50	77
Chlorides, %		0.019	Heat of Hydration, C-1702 at 3-day, cal/g		75.4

Additional Data

Item	Limestone	Inorganic Processing Addition	Base Cement Phase Composition	Result
Amount	4.63	N/A	C_3S	59.34
SiO_2	7.41	N/A	C_2S	12.54
Al_2O_3	1.01	N/A	C_3A	7.42
Fe_2O_3	0.36	N/A	C_4AF	10.11
CaO	46.69	N/A		
SO_3	0.37	N/A		

Notes

Footnotes:
A: no limit applicable
D: if SO3 exceeds 3.0%, C-1038 shall not be more than 0.020%

Brandon Eckard

March 16, 2020
Date

Quality Control Manager: Brandon Eckard

January 4, 2021

Attention: SEFA Customer

Re: 2021 Certification

The SEFA Group certifies through this letter that the fly ash from our Keystone Generating Station located in Shelocta, PA complies with the requirements set forth in ASTM C 618, Class F, when sampled and tested in accordance with ASTM C 311. Unless you receive written notification regarding a change in status from The SEFA Group, this certification will apply to any and all phases on construction projects.

Fly ash is a 100% recycled material, made in the USA. It is the by-product of burning pulverized coal in an electrical generating station. The Environmental Protection Agency (EPA) under Section 6002 (e) of the Resource Conservation and Recovery Act (RCRA) of 1976 targeted a number of recovered materials, including fly ash. The EPA recognizes that fly ash can be used in concrete to lessen the solid waste problem and that fly ash has technical advantages in cementitious materials. Fly ash is considered a Post- Industrial, Pre-Consumer recycled product.

The SEFA Group offers full field service with the purchases of our product. Our technical representatives are available to aid you with field-testing and quality control.

Thank you for your interest in our product. If you need further assistance, please call our administrative office at (888) 339-7332.

Sincerely,

Bert Nunn
Vice President, Sales

SGS TEC SERVICES
Testing • Engineering • Consulting

Client: Mr. Ross Gorman
SEFA
217 Cedar Road
Lexington, SC 29073

Date: March 10, 2021
TEC Services I.D.: TEC 06-0509
Lab No.: 21-034-KEY

REPORT OF FLY ASH TESTS

Sample I.D. No.: KEY123020 — Date Sampled: December 30, 2020
Manufacturer: Keystone Station, Shelocta, PA — Date Received: January 13, 2021

Chemical Analysis	Results (wt%)	Specification (Class F) ASTM C618-19	Specification (Class F) AASHTO M295-19
Silicon Dioxide (SiO_2)	**49.2**	----	----
Aluminum Oxide (Al_2O_3)	**23.3**	---	----
Iron Oxide (Fe_2O_3)	**16.73**	----	----
Sum of Silicon Dioxide, Iron Oxide & Aluminum Oxide (SiO_2+Al_2O_3+Fe_2O_3)	**89.2**	50.0 % min.	50.0 % min.
Calcium Oxide (CaO)	**2.2**	18.0 % max.	18.0 % max.
Magnesium Oxide (MgO)	**1.6**	----	----
Sodium Oxide (Na_2O)	**0.37**	----	----
Potassium Oxide (K_2O)	**2.25**	---	----
"Sodium Oxide Equivalent (Na_2O+0.658K_2O)"	**1.85**	----	----
Sulfur Trioxide (SO_3)	**0.34**	5.0 % max.	5.0 % max.
Loss on Ignition	**3.2**	6.0 % max.	5.0 % max.
Moisture Content	**0.1**	3.0 % max.	3.0 % max.
Total Chlorides	**0.005**		
Available Alkalies			
Sodium Oxide (Na_2O) as Available Alkalies	**0.17**	----	----
Potassium Oxide (K_2O) as Available Alkalies	**1.16**	----	----
Available Alkalies as "Sodium Oxide Equivalent (Na_2O+0.658K_2O)"	**0.93**	----	1.5 % max.*
Physical Analysis			
Fineness (Amount Retained on #325 Sieve)	**20.4%**	34 % max.	34 % max.
Strength Activity Index (Using Lehigh Leeds Alabama Portland Cement)			
At 7 Days: Control Average, psi: 4890; Test Average, psi: 3970	**81%**	75 % min.† (of control)	75 % min.† (of control)
At 28 Days: Control Average, psi: 6290; Test Average, psi: 5390	**86%**	75 % min.† (of control)	75 % min.† (of control)
Water Requirements (Test H_2O/Control H_2O) Control, mls: 242; Test, mls: 234	**97%**	105% max.† (of control)	105% max.† (of control)
Autoclave Expansion:	**-0.02%**	± 0.8 % max.	± 0.8 % max.
Uniformity Requirements	**Variation**		
Specific Gravity: **2.35** Average: **2.39**	**-1.8%**	5 % max. from average	5 % max. from average
% Retained #325 Sieve: **20.4** Average: **19.3**	**1.0%**	5 % max. from average	5 % max. from average

† Meeting the 7 day or 28 day strength activity index will indicate specification compliance
* Optional

The results of our testing indicate that this sample complies with ASTM C618-19 and AASHTO M295-19 specifications for Class F pozzolans.

Respectfully Submitted,
SGS TEC Services

Dean Roosa
Project Manager

Shawn McCormick
Laboratory Principal

LAFARGE
Building better cities™

2021 NEWCEM CERTIFICATION

This is to certify that all NEWCEM Ground Granulated Blast Furnace Slag produced and distributed by Lafarge North America, from our Sparrows Point plant complies with the current chemical and physical requirements of ASTM C989 grade 120 and AASHTO M 302 grade 120 at time of shipment

Sincerely,

David Johns

David Johns
Technical Services Engineer
LafargeHolcim

Material Certification Report

Brand: NewCem®
Material: Slag Cement
Type: Grade 120

Test Period: 01-Jan-2021 to 31-Jan-2021
Lot Number: Multiple Lots

Certification

This cement meets the specifications of ASTM C989 and AASHTO M 302 for Grade 120 slag cement.

General Information

Supplier:	Holcim (US) Inc. d/b/a LafargeHolcim US	Source Location:	**Sparrows Point Plant**
Address:	8700 West Bryn Mawr Ave Chicago, IL 60631		2001 Wharf Road Baltimore, MD 21219
Contact:		Contact:	Brian Borowski (630) 561-1198

The following is based on average test data during the test period. The data is typical of product shipped from this source; individual shipments may vary.

Test Data on ASTM Standard Requirements

Chemical			Physical		
Item	**Limit [1]**	**Result**	**Item**	**Limit [1]**	**Result**
Sulfide Sulfur (S) (%)	2.5 max	0.6	+45 µm (No. 325) Sieve (%)	20 max	1.4
			Blaine Fineness (m^2/kg)	-	599
Sulfate Sulfur (as SO_3) [2] (%)	-	0.5	Air Content (%)	12 max	4.3
Aluminum Oxide (as Al_2O_3) (%)	-	12.5			
			Slag Activity Index (%)		
			Avg 7 Day Index	-	86.1
Chloride (Cl) (%)	-	0.009	Avg 28 Day Index (previous month's data)	115 min	122.6
Equivalent Alkalies (%)	-	0.6	Compressive Strength MPa (psi)		
			Slag + Reference Cement		
			7 Day	-	24.3 (3530)
			28 Day (previous month's data)	-	46.7 (6770)

Test Data on Reference Cement

Chemical			Physical		
Item	**Limit [1]**	**Result**	**Item**	**Limit [1]**	**Result**
Equivalent Alkalies (%)	0.60 - 0.90	0.78	7 Day	-	28.3 (4110)
			28 Day (previous month's data)	5000 min	38.3 (5560)

Notes (*1-5)

1 - Dashes in the limits columns means Not Applicable
2 - If calcium sulfate is added to slag cement, measure in accordance with Test Method C1038/C1038M. Slag cement with added calcium sulfate will not develop expansion exceeding 0.020% at 14 days.
3 - Information on Reference Cement test data available upon request.
4 - Specific Gravity: 2.90
5 - This data may have been reported on previous Material Certification Reports. It is typical of the cement being currently shipped.

Date Issued: 2/18/2021

Brian Borowski
Quality Manager, US MPC

Sloan Materials, LLC

Sieve Analysis Report ASTM D448

24770 Maypole Rd.
Leonardtown, MD 20650
PH.# (301)475-3651
FAX# (301)475-3668
slomat66@emypeople.net

Report date: *04/07/20*
Sample date: *04/06/20*
Material: *Washed Pea Gravel*
Operator: *Daryl*
Sample taken: Stockpile ✓ Belt____
Sample time: *4:00 PM*
Test No. *1*

SIEVE SIZE	WEIGHT	% PASSING	SPECIFICATION
½"	726	100	100
⅜"	726	100	85-100
4	77	10.6	10-30
8	3	.4	0-10

© 2019 Sloan Materials, LLC

Sloan Materials, LLC

Sieve Analysis Report ASTM C-33

24770 Maypole Rd.
Leonardtown, MD 20650
PH.# (301)475-3651
FAX# (301)475-3668
office@sloanmaterials.net

Report date: *01/18/21*
Sample date: *01/18/21*
Material: *Concrete sand*
Operator: *Daryl*
Sample taken: Stockpile ✓ Belt____
Sample time: *9:00 AM*
Test No. *1*

SIEVE SIZE	WEIGHT	% PASSING	VA SPEC	MD SPEC
	481			
3/8"	477	100	100	100
#4	474	99	95-100	95-100
#8	396	83	80-100	
#16	312	65	50-85	45-85
#30	212	44	25-60	20-65
#50	66	14	5-30	8-30
#100	6	1	0-10	0-6
#200	4	0.8		0-3

F.M. = 2.94

©2020 Sloan Materials, LLC

Schuster/17

BUILDING TRUST

Sika Corporation · 201 Polito Avenue · Lyndhurst, NJ 07071 · USA

Schuster Concrete Ready Mix, LLC

CONTACT

Nathaniel Artman
Concrete Specialist
Phone: +1.330.495.0109
Mobile: +1.330.495.0109
artman.nathaniel@us.sika.com

RE: CERTIFICATE OF COMPLIANCE - SIKA PLASTOCRETE-250 January 26, 2021

This is to confirm that Sika Plastocrete-250, water reducing admixture, conforms to the requirements of ASTM C 494/AASHTO M 194, Type A, B & D.

Sika Plastocrete-250 is manufactured under quality control conditions by Sika Corporation. Sika Plastocrete-250 exhibits the typical physical properties as stated in the current data sheet for the product found at Sika's website www.usa.sika.com when used as directed within the product's shelf life for one year from the date of installation. **Always read the current applicable product data sheet, safety data sheet and label prior to use.**

Results may differ based upon statistical variations depending upon mix design, mixing methods and equipment, temperature, application methods, test methods, actual site conditions and curing conditions.

NO OTHER WARRANTIES, EXPRESS OR IMPLIED, SHALL APPLY INCLUDING ANY WARRANTY OF MERCHANTIBILITY OR FITNESS FOR A PARTICULAR PURPOSE. SIKA SHALL NOT BE LIABLE UNDER ANY LEGAL THEORY FOR SPECIAL OR CONSEQUENTIAL DAMAGES OF ANY KIND. SIKA SHALL NOT BE RESPONSIBLE FOR THE USE OF THIS PRODUCT IN A MANNER TO INFRINGE ON ANY PATENT OR ANY OTHER INTELLECTUAL PROPERTY RIGHTS HELD BY OTHERS.

Sincerely,

Nathaniel Artman, EI
Concrete Specialist

BUILDING TRUST

PRODUCT DATA SHEET

Sika® Plastocrete®-250

WATER REDUCING ADMIXTURE

PRODUCT DESCRIPTION

Sika® Plastocrete®-250 is a new generation water reducing admixture. Sika® Plastocrete®-250 meets the requirements of ASTM C-494 Type A, B and D.

USES

Sika® Plastocrete®-250 is recommended for use in the production of conventional ready mixed concrete, whenever increased plasticity and higher ultimate strengths are desired.

CHARACTERISTICS / ADVANTAGES

The use of Sika® Plastocrete®-250 provides the following benefits in concrete:

- Improved workability
- Improved compressive and flexural strength
- Allows optimization of cement content
- Improved finishability
- Improved durability

Sika® Plastocrete®-250 does not contain intentionally added chlorides and will not initiate nor promote the corrosion of steel in the concrete.

PRODUCT INFORMATION

Packaging	Sika® Plastocrete®-250 is available in 55 gallon drums (208 liters), 275 gallon totes (1040 liters) and bulk delivery.
Appearance / Color	Dark Brown / Black Liquid
Shelf Life	Shelf life when stored in dry warehouse conditions between 40 °F and 80 °F (5–27 °C) is one year.
Storage Conditions	Sika® Plastocrete®-250 should be stored at above 40 °F (5 °C). If frozen, thaw and agitate thoroughly to return to normal state. Protect from direct sunlight.
Specific gravity	Approx. 1.06

APPLICATION INFORMATION

Recommended Dosage	Dosage rates will vary depending on the material used, ambient conditions and the requirements of a specific project. For general concreting applications, Sika recommends a dosage rate between 2–5 fl.oz./100 lbs. (130–330 ml/100 kg) of cementitious materials for normal water reduction and setting characteristics. Dosage rates of 5-9 fl.oz./100 lbs. (330-590 ml/100 kg) of cementitious materials are recommended for applications where higher water reduction is needed as well as extended workability and prolonged setting times. Dosage rates outside the recommended range may be used where specialized materials such as microsilica are specified, extreme ambient conditions are encountered or unusual project conditions require special consideration. In this case please contact your local regional Sika office or Sika technical service department at 1-800-933-7452 for further information.
Mixing	For best plasticizing results, Sika® Plastocrete®-250 should be added directly to freshly mixed concrete in the concrete mixer at the end of the batching cycle. Sika® Plastocrete®-250 may also be dispensed as an integral material during the regular admixture batching cycle, or into freshly mixed concrete in a Ready-Mix truck at the concrete plant or job site. To optimize the plasticizing effect, Sika recommends that the combined materials be mixed for 80-100 revolutions, either in the concrete mixer or in the Ready-Mix truck. **Combination with other Admixtures:** Sika® Plastocrete®-250 is highly effective as a single admixture or in combination with other admixtures. When used in combination with other admixtures, dispense each admixture separately into the concrete. Do not mix with dry cement. Please contact your local regional office or Technical Service Department at 1-800-933-7452 for further information. **Combination with Pozzolanic Materials**: Sika® Plastocrete®-250 can be successfully used in mix designs utilizing pozzolanic materials such as fly ash and GGBFS.

BASIS OF PRODUCT DATA

Results may differ based upon statistical variations depending upon mixing methods and equipment, temperature, application methods, test methods, actual site conditions and curing conditions.

ENVIRONMENTAL, HEALTH AND SAFETY

For further information and advice regarding transportation, handling, storage and disposal of chemical products, user should refer to the actual Safety Data Sheets containing physical, environmental, toxicological and other safety related data. User must read the current actual Safety Data Sheets before using any products. In case of an emergency, call CHEMTREC at 1-800-424-9300, International 703-527-3887.

OTHER RESTRICTIONS

See Legal Disclaimer.

LEGAL DISCLAIMER

- **KEEP CONTAINER TIGHTLY CLOSED**
- **KEEP OUT OF REACH OF CHILDREN**
- **NOT FOR INTERNAL CONSUMPTION**
- **FOR INDUSTRIAL USE ONLY**
- **FOR PROFESSIONAL USE ONLY**

Prior to each use of any product of Sika Corporation, its subsidiaries or affiliates ("SIKA"), the user must always read and follow the warnings and instructions on the product's most current product label, Product Data Sheet and Safety Data Sheet which are available at usa.sika.com or by calling SIKA's Technical Service Department at 1-800-933-7452. Nothing contained in any SIKA literature or materials relieves the user of the obligation to read and follow the warnings and instructions for each SIKA product as set forth in the current product label, Product Data Sheet and Safety Data Sheet prior to use of the SIKA product.

SIKA warrants this product for one year from date of installation to be free from manufacturing defects and to meet the technical properties on the current Product Data Sheet if used as directed within the product's shelf life. User determines suitability of product for intended use and assumes all risks. User's and/or buyer's sole remedy shall be limited to the purchase price or replacement of this product exclusive of any labor costs. **NO OTHER WARRANTIES EXPRESS OR IMPLIED SHALL APPLY INCLUDING ANY WARRANTY OF MERCHANTABILITY OR FITNESS FOR A PARTICULAR PURPOSE. SIKA SHALL NOT BE LIABLE UNDER ANY LEGAL THEORY FOR SPECIAL OR CONSEQUENTIAL DAMAGES. SIKA SHALL NOT BE RESPONSIBLE FOR THE USE OF THIS PRODUCT IN A MANNER TO INFRINGE ON ANY PATENT OR ANY OTHER INTELLECTUAL PROPERTY RIGHTS HELD BY OTHERS.**

Sale of SIKA products are subject to the Terms and Conditions of Sale which are available at https://usa.sika.com/en/group/SikaCorp/termsandconditions.html or by calling 1-800-933-7452.

Sika Corporation
201 Polito Avenue
Lyndhurst, NJ 07071
Phone: +1-800-933-7452
Fax: +1-201-933-6225
usa.sika.com

Sika Mexicana S.A. de C.V.
Carretera Libre Celaya Km. 8.5
Fracc. Industrial Balvanera
Corregidora, Queretaro
C.P. 76920
Phone: 52 442 2385800
Fax: 52 442 2250537

Schuster/21

BUILDING TRUST

Sika Corporation · 201 Polito Avenue · Lyndhurst, NJ 07071 · USA

Schuster Concrete Ready Mix, LLC

CONTACT

Nathaniel Artman
Concrete Specialist
Phone: +1.330.495.0109
Mobile: +1.330.495.0109
artman.nathaniel@us.sika.com

RE: CERTIFICATE OF COMPLIANCE - SIKA AEA-14

January 26, 2021

This is to confirm that Sika AEA-14, air entraining admixture, conforms to the requirements of ASTM C 260/AASHTO M 154.

Sika AEA-14 is manufactured under quality control conditions by Sika Corporation. Sika AEA-14 exhibits the typical physical properties as stated in the current data sheet for the product found at Sika's website www.usa.sika.com when used as directed within the product's shelf life for one year from the date of installation. **Always read the current applicable product data sheet, safety data sheet and label prior to use.**

Results may differ based upon statistical variations depending upon mix design, mixing methods and equipment, temperature, application methods, test methods, actual site conditions and curing conditions.

NO OTHER WARRANTIES, EXPRESS OR IMPLIED, SHALL APPLY INCLUDING ANY WARRANTY OF MERCHANTIBILITY OR FITNESS FOR A PARTICULAR PURPOSE. SIKA SHALL NOT BE LIABLE UNDER ANY LEGAL THEORY FOR SPECIAL OR CONSEQUENTIAL DAMAGES OF ANY KIND. SIKA SHALL NOT BE RESPONSIBLE FOR THE USE OF THIS PRODUCT IN A MANNER TO INFRINGE ON ANY PATENT OR ANY OTHER INTELLECTUAL PROPERTY RIGHTS HELD BY OTHERS.

Sincerely,

Nathaniel Artman, EI
Concrete Specialist

BUILDING TRUST

PRODUCT DATA SHEET
Sika® AEA-14

AIR ENTRAINING ADMIXTURE

PRODUCT DESCRIPTION

Sika® AEA-14 admixture is an aqueous solution of organic materials. Sika® AEA-14 meets the requirements of ASTM C-260 for air entraining admixtures.

USES

Sika® AEA-14 is recommended for use whenever air entrained concrete is desired. Ready-mix, precast and block producers can achieve predictable and uniform entrained air contents in concrete, even where harsh lean mixes are used or fly-ash is added to the concrete.

CHARACTERISTICS / ADVANTAGES

Durability:

- Air entrainment is recognized as the most effective prevention against concrete scaling in exposed environments. Air entrained concrete delivers particular benefits in the form of increased concrete durability. This is important in colder climates where frost and freeze-thaw cycles can cause scaling and damage to the concrete surface.
- Air entraining agents help to prevent scaling by creating microscopic air voids that water trapped in the concrete can expand into when the concrete freezes, thus preventing cracks caused by the natural expansion. Entrained air voids in the concrete will also increase durability in harsh environments where concrete is exposed to deicing salts, marine salts and sulfates.
- Workability and placeability are also improved by the lubricating action of the microscopic bubbles in the concrete. Concrete flows better, and bleeding and shrinkage is reduced because less water is needed to obtain the desired workability.

PRODUCT INFORMATION

Packaging	Sika® AEA-14 is available in 55 gallon drums (208 liters), 275 gallon totes (1040 liters) and bulk delivery.
Appearance / Color	Dark Brown Liquid The presence of cloudiness/turbidity is a natural occurrence and does not affect the performance of Sika® AEA-14.
Shelf Life	Shelf life when stored in dry warehouse conditions between 50 °F and 80 °F (10–27 °C) is 1 year.
Storage Conditions	Sika® AEA-14 should be stored at above 40 °F (5 °C). If frozen, thaw and agitate thoroughly to return to normal state.

Specific Gravity	Approx. 1.01	Schuster/23

APPLICATION INFORMATION

Recommended Dosage	Dosage rates for Sika® AEA-14 will typically fall between 1 and 3 fl. oz. per 100 lbs. (65–195 ml/100 kg) of cement to entrain between 4 and 6 percent air. Higher air contents may be obtained by increasing the dosage rate. Dosage rates will vary depending on the air content required for a particular project. Typically air contents will be specified in the range of 4 to 8 percent by volume. Other factors that may affect the amount of air entrained into the concrete include, but are not limited to: total cementitious content, type of pozzolanic materials, sand gradation, temperature and water content. Sika recommends that trial mixes be performed whenever material or any other changes are made that may affect the amount of entrained air.
Mixing	Measure the required quantity per batch manually or with automatic dispenser equipment. Add Sika® AEA-14 to mixing water or sand. Do not mix with dry cement. When used in combination with other admixtures, care must be taken to dispense each admixture separately into the mix. **Combination with Other Admixtures:** Combination with other admixtures, particularly water reducers and retarders, may increase the amount of entrained air in the mix. Air contents should be checked with an air-meter after batching and dosage adjustments made at the concrete plant.

BASIS OF PRODUCT DATA

Results may differ based upon statistical variations depending upon mixing methods and equipment, temperature, application methods, test methods, actual site conditions and curing conditions.

OTHER RESTRICTIONS

See Legal Disclaimer.

ENVIRONMENTAL, HEALTH AND SAFETY

For further information and advice regarding transportation, handling, storage and disposal of chemical products, user should refer to the actual Safety Data Sheets containing physical, environmental, toxicological and other safety related data. User must read the current actual Safety Data Sheets before using any products. In case of an emergency, call CHEMTREC at 1-800-424-9300, International 703-527-3887.

LEGAL DISCLAIMER

- **KEEP CONTAINER TIGHTLY CLOSED**
- **KEEP OUT OF REACH OF CHILDREN**
- **NOT FOR INTERNAL CONSUMPTION**
- **FOR INDUSTRIAL USE ONLY**
- **FOR PROFESSIONAL USE ONLY**

Prior to each use of any product of Sika Corporation, its subsidiaries or affiliates ("SIKA"), the user must always read and follow the warnings and instructions on the product's most current product label, Product Data Sheet and Safety Data Sheet which are available at usa.sika.com or by calling SIKA's Technical Service Department at 1-800-933-7452. Nothing contained in any SIKA literature or materials relieves the user of the obligation to read and follow the warnings and instructions for each SIKA product as set forth in the current product label, Product Data Sheet and Safety Data Sheet prior to use of the SIKA product.

SIKA warrants this product for one year from date of installation to be free from manufacturing defects and to meet the technical properties on the current Product Data Sheet if used as directed within the product's shelf life. User determines suitability of product for intended use and assumes all risks. User's and/or buyer's sole remedy shall be limited to the purchase price or replacement of this product exclusive of any labor costs. **NO OTHER WARRANTIES EXPRESS OR IMPLIED SHALL APPLY INCLUDING ANY WARRANTY OF MERCHANTABILITY OR FITNESS FOR A PARTICULAR PURPOSE. SIKA SHALL NOT BE LIABLE UNDER ANY**

LEGAL THEORY FOR SPECIAL OR CONSEQUENTIAL DAMAGES. SIKA SHALL NOT BE RESPONSIBLE FOR THE USE OF THIS PRODUCT IN A MANNER TO INFRINGE ON ANY PATENT OR ANY OTHER INTELLECTUAL PROPERTY RIGHTS HELD BY OTHERS.

Sale of SIKA products are subject to the Terms and Conditions of Sale which are available at https://usa.sika.com/en/group/SikaCorp/termsandconditions.html or by calling 1-800-933-7452.

Sika Corporation
201 Polito Avenue
Lyndhurst, NJ 07071
Phone: +1-800-933-7452
Fax: +1-201-933-6225
usa.sika.com

Sika Mexicana S.A. de C.V.
Carretera Libre Celaya Km. 8.5
Fracc. Industrial Balvanera
Corregidora, Queretaro
C.P. 76920
Phone: 52 442 2385800
Fax: 52 442 2250537

HOHMANN & BARNARD, INC.

Joint Reinforcement

220 Ladder Mesh Reinforcement

Mt St Mary's COAD Science Bldg. Addition
Robert W. Sheckles, Inc (masonry contractor)
Spec Section: 042000 – 2.3 A
Material Submitted: reinforcement wire (for std cmu)

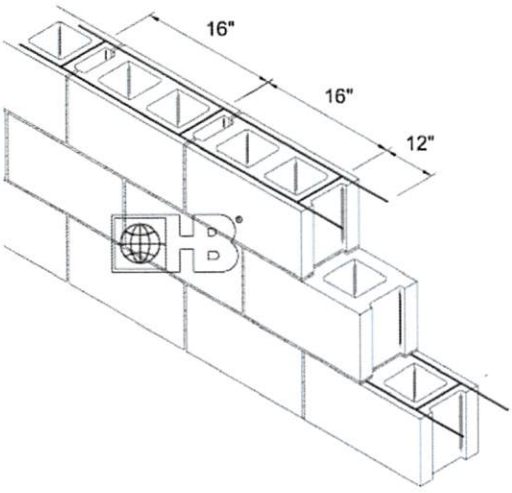

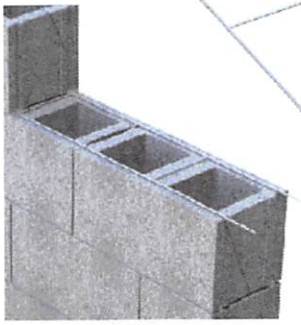

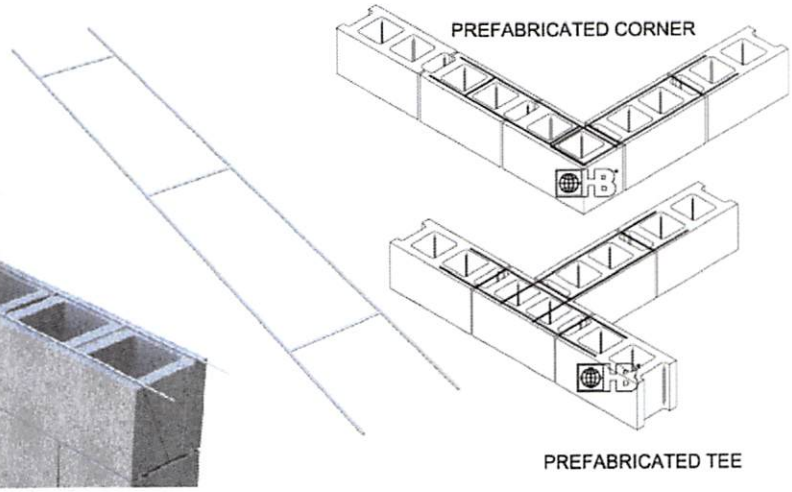

DRAWINGS FOR ILLUSTRATIVE PURPOSES ONLY

220 Ladder-Mesh:

- Continuous lengths ladder-type joint reinforcement with two longitudinal rods
- Embedded into the horizontal mortar joints of the masonry walls

Wire (Carbon Steel): Cold-drawn steel wire conforming to ASTM A1064/A1064M: Tensile Strength - 80,000 psi | Yield Point - 70,000 psi min.

Hot-Dip Galvanized after fabrication: ASTM A153/A153M-B2 (1.5 oz/ft²)

Mill Galvanized coating: ASTM A641/A641M (0.1 oz/ft²)

Special order for 0.4 oz/ft² and 0.8 oz/ft² coating thickness

Note: Hohmann & Barnard will certify to a minimum of 2.0 oz/ft²

Wire (Stainless Steel): ASTM A580/ASTM A580M - AISI Type 304 and Type 316

Conforms to:

- ASTM A951/A951M (Standard Specification for Steel Wire for Masonry Joint Reinforcement)
- ACI / ASCE 530 (Building Code Requirements for Masonry Structures)

SIZES:

- 10' length standard, custom length available special order

GAUGES:

- Standard Weight (SH): 9 Gauge Side Rods x 9 Gauge Cross Rods
- Extra Heavy (EH): 3/16"Ø Side Rods x 9 Gauge Cross Rods
- Super Heavy Duty (SHD): 3/16"Ø Side Rods x 3/16"Ø Cross Rods

NOTE:

- State overall wall size and block thickness when ordering.

Wire Size	Standard
Nominal Backup Width	4", 6", 8", 10", 12", 14", 16"
Finish	Hot Dip Galvanized

IMPORTANT: Since each construction project is unique, the appropriate selection and use of any product contained herein must be determined by competent architects, engineers and other appropriate professionals who are familiar with the specific requirements of the project in question.

Project Information

Project Name:	Mt St Mary's COAD Science Building
Project Location:	, Emmitsburg MD 21727
General Contractor:	JEM Group
Subcontractor:	Robert W Sheckles, Inc
Project Number:	
Supplier	York Building Products

HOHMANN & BARNARD, INC.

Rebar Positioners

RB Rebar Positioners

Mt St Mary's COAD Science Bldg. Addition
Robert W. Sheckles, Inc (masonry contractor)
Spec Section: 042000
Material Submitted: rebar positioners

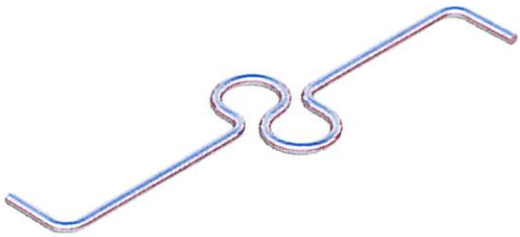

DRAWINGS FOR ILLUSTRATIVE PURPOSES ONLY

Horizontal Length	4", 6", 8", 10"
Finish	Hot Dip Galvanized

IMPORTANT: Since each construction project is unique, the appropriate selection and use of any product contained herein must be determined by competent architects, engineers and other appropriate professionals who are familiar with the specific requirements of the project in question.

RB Rebar Positioners position two rebar in center of block, the simple Z-shaped wire bridges the cell of the block while bends rest on the shell.

AVAILABLE FINISHES:

Mill Galvanized

Hot Dip Galvanized

Stainless Steel

DIMENSIONS/GAUGES:

9 gauge wire

Available for 6", 8", 10" or 12" block

Project Information

Project Name:	Mt St Mary's COAD Science Building
Project Location:	, Emmitsburg MD 21727
General Contractor:	JEM Group
Subcontractor:	Robert W Sheckles, Inc
Project Number:	
Supplier	York Building Products

HOHMANN & BARNARD, Inc.
CORPORATE HEADQUARTERS
30 Rasons Court | Hauppauge, NY 11788
T: 800.645.0616 F: 631.234.0683
www.h-b.com

Branch/Subsidiary Locations:
ALABAMA - ARIZONA - ILLINOIS
MARYLAND - NEW YORK - PENNSYLVANIA
TEXAS - UTAH - CANADA

HOHMANN & BARNARD, INC.

Rebar Positioners

RB-Twin Rebar Positioner

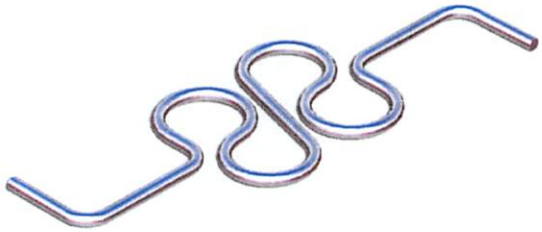

DRAWINGS FOR ILLUSTRATIVE PURPOSES ONLY

Wire Size	9 ga
Horizontal Length	4", 6", 8", 10"
Finish	Hot Dip Galvanized

IMPORTANT: Since each construction project is unique, the appropriate selection and use of any product contained herein must be determined by competent architects, engineers and other appropriate professionals who are familiar with the specific requirements of the project in question.

RB-Twin Rebar Positioners have double loops to hold four rebar in the center of the block, the simple Z-shaped wire bridges the cell of block while the bends rest on shell.

AVAILABLE FINISHES:

Mill Galvanized

Hot Dip Galvanized

Stainless Steel

DIMENSIONS/GAUGES:

9 gauge wire

Available for 6", 8", 10" or 12" block

Project Information

Project Name:	Mt St Mary's COAD Science Building
Project Location:	, Emmitsburg MD 21727
General Contractor:	JEM Group
Subcontractor:	Robert W Sheckles, Inc
Project Number:	
Supplier	York Building Products

HOHMANN & BARNARD, Inc.
CORPORATE HEADQUARTERS
30 Rasons Court | Hauppauge, NY 11788
T: 800.645.0616 F: 631.234.0683
www.h-b.com

Branch/Subsidiary Locations:
ALABAMA - ARIZONA - ILLINOIS
MARYLAND - NEW YORK - PENNSYLVANIA
TEXAS - UTAH - CANADA