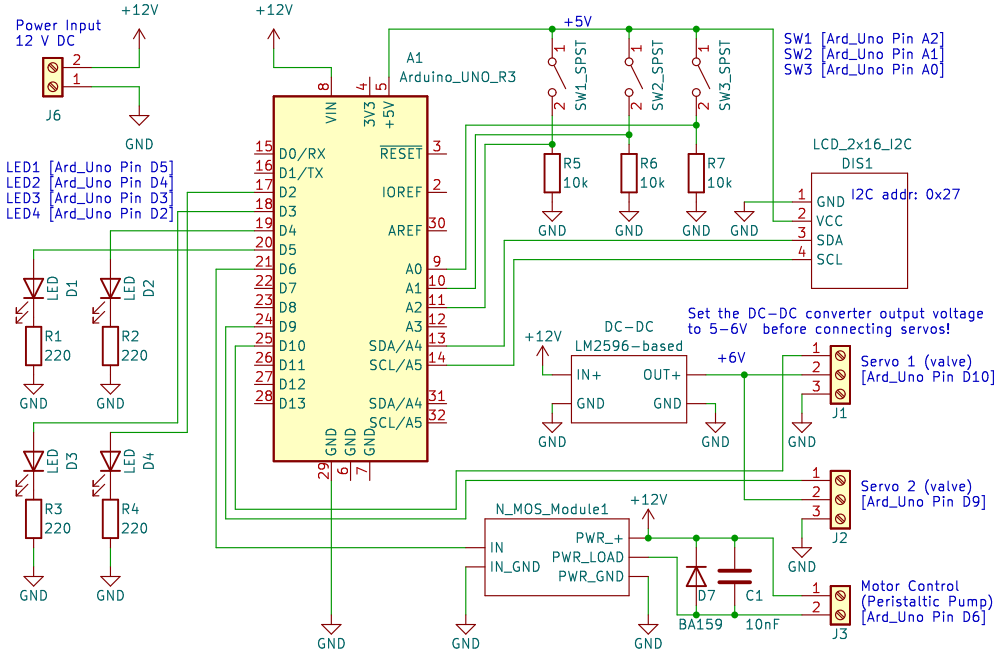
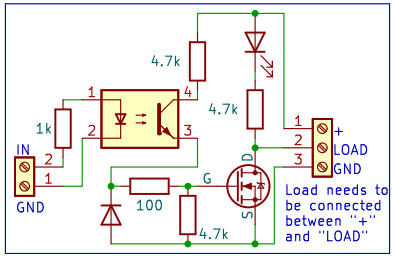
Possible schematic of N_MOS_Module