SEMARAK ILMU PUBLISHING

Journal of Advanced Research in Applied Sciences and Engineering Technology

Journal homepage:
https://semarakilmu.com.my/journals/index.php/applied_sciences_eng_tech/index
ISSN: 2462-1943

Design of Adaptive RFID RC522 on IoT Platform with Different Types Passive Tag Based on Self-Service Library Management System (SSLMS)

Kharudin Ali[1,*], Damhuji Rifai[1], Afizullah Abdullah[1], Muhammad Luqman Muhd Zain[1], Ahmad Joraimee[1], Ahmed N Abdallah[2], Nur Amalina Awang[3], Jian Ding Tan[4], Johnny Koh Siaw Paw[5], Chong Tak Yaw[5]

[1] Faculty of Engineering Technology (Electrical Automation), University College TATI, 24000 Kemaman, Terengganu, Malaysia
[2] Faculty of Electronic Information Engineering, Huaiyin Institute of Technology, Huai'an Jiangsu, China
[3] Akademi Pengajian Bahasa, UiTM Cawangan Kelantan, Bukit Ilmu, 18500, Machang, Kelantan, Malaysia
[4] School of Electrical Engineering and Artificial Intelligence, Xiamen University Malaysia, 43900 Sepang, Selangor, Malaysia
[5] Institute of Sustainable Energy, Universiti Tenanga Nasional, Jalan IKRAM-UNITEN, 43000 Kajang, Selangor, Malaysia

ARTICLE INFO

Article history:
Received 24 May 2023
Received in revised form 23 September 2023
Accepted 2 October 2023
Available online 18 October 2023

Keywords:
RFID; passive tag; IoT; Library Management System

ABSTRACT

Radio Frequency Identification (RFID) refers to a wireless system comprising two components: tags and readers. The reader is a device with one or more antennas that emit radio waves and receive signals from the RFID tag. This system is available on most systems applications especially involving security systems, including house/office access systems, toll systems, and library systems. The accessing data is made stand-alone or data-based through the existing conventional RFID system on the market, especially in library systems. Also, the tag provided is only limited to the same type, either cards or stickers. From that, it will produce problems in monitoring the status of books, especially for loans or returns. At the same time, the difference in detection sensitivity will be the effect of the detection range for the types of tag used. Through this research, the development of adaptive RFID on IoT platforms with different types of passive tag library systems highly emphasized monitoring the status of books besides maximum range detection by using different types of passive tag and at the same time increasing the security by implementing the book status detection on the gate of the library. The tag sticker used can be read/written in the 13.56 MHz frequency with the High Frequency (HF) band due to its affordability and ease of implementation. RFID tags are embedded in all books and activated; it triggers the alarm system if the status return gets captured on the memory of the RFID tag. The alarm accuracy is almost 100%. The result showed that within the acceptable range of 5 cm, the RFID reader works efficiently in detecting books. It shows that the card tag gives 90% sensitivity of range detection, followed by the sticker and keychain tag at 70%, and, lastly, the transparent card tags at 40%.

* *Corresponding author.*
E-mail address: kharudin@uctati.edu.my

https://doi.org/10.37934/araset.33.1.163174

1. Introduction

Entry and exit registration for a library can be made automatically based on the latest technology. This can simultaneously save manpower and focus library staff on important work that can be carried out well. Based on the latest library management technology, the RFID-based system is the latest technology that is used for efficiency and at the same time reduces management costs [1-4]. In addition, the RFID system offers a variety of functions compared to the bar code system that has been used over the years [5,6]. The advantage of using the RFID system is to be able to read several IDs for the book at a time compared to a barcode system that can only read an ID at a time. By installing a separate sorting machine, which will read the tag information from the returned items and sort them into the corresponding cart, it is possible to make the check-in unit more intelligent. It also saves time in book management, where library staff can directly manage the books that have been sent to the library without having to worry about the book return data. In addition, with the use of the RFID system, visitors and library members can perform the process of returning and organizing books in a self-service arrangement based on the ID that has been written in the book [1,7-10]. Naturally, this method works best if a user has only a few items to return. Straying and missing objects is a very common problem in libraries. It is also a problem that RFID can be used to make things easier. Using portable scanners, a librarian can easily verify if a tablet has missing or misplaced items, making inventory control much quicker. It could also be done so that the shelves themselves contain an RFID scanner that will automatically update the information to staff. In this way, it becomes possible to quickly check the condition of each tablet from the computer without having to check each tablet individually. With barcode-based systems, when a new book arrives at a library it needs to be labeled with a barcode and also with an electromagnetic tag that is used for anti-theft purposes [11,12]. In contrast, only one RFID tag may be used for both traffic management and anti-theft purposes. This allows new books to be processed and ready to be distributed much more quickly. In this way, RFID also makes safety more efficient [13-16].

The RFID system used in a library has a long history. The first application of radio frequency identification technology was fully deployed in Bukit Batok Community Library in Singapore in 1998, afterwards, countries like the United States, Australia, the Netherlands, and Malaysia, started using this technology to construct the automated library system [17]. According to Checkpoint statistics, more than 440 libraries around the world used RFID technology in 2005, and that number increased to 2,000 in 2007 and 3,000 at the end of 2009. Furthermore, the growth rate for major libraries worldwide using RFID technology is 30% of annual rates [18].

Finland's data model sets the national standard and regulations for Finland. HF tape is now widely accepted for library applications in Finland. The advantages of the HF library app include;

i. Excellent immunity to ambient noise and electrical interferences.
ii. Reliability of bulk tag reading, of tags in various orientations
iii. Not affected by the shielding of the human body, making it more suitable for EAS security
iv. features.
v. Small tag size
vi. Appropriate reading range
vii. Low-cost tags and readers
viii. Easier for overall applications because of the harmonized regulatory environment.
ix. Ideal for item-level tracking
x. Supported by numerous RFID label and reader vendors.

It has become clear that RFID offers many advantages in the use of libraries, but there are problems with each technology. From the client's perspective, the most disturbing issue is the protection of personal information. Although an RFID tag does not contain personal information, the tag itself makes it possible to "follow up" and "hot listing" [19]. Tracking, as the name implies, means tracking the movements of an RFID-embedded item by using tag readers. This, together with the "hot listing", a way to create a database of items and their corresponding label identification numbers, creates a rather serious confidentiality problem [20,21]. The main financial barrier is the cost. While costs are coming down, the cost of a library management system based on RFID is even more than a system based on bar codes and electromagnetic labels. Since the amount of money needed to update the TOSI is high, it is not known whether the return on investment is high enough to cover the costs [22-25]. While RFID facilitates the implementation of safety measures over electromagnetic tags, some issues undermine this benefit. Depending on the strength of an RFID reader it is possible to either greatly hinder or completely block the tag signal by wrapping an item, embedded with an RFID tag, with several layers of aluminium or tin foil. This, combined with the not always so well-performing gate sensors, makes the risk of items getting stolen quite high. From here the standalone RFID system should be developed to ensure it will operate effectively if the internet or database not updating or in a server-down situation. Also, the different type of tag was analyzed to know the good types of tag that will be giving high distance detection on RFID reader.

2. Methodology

2.1 Overall System Architecture

RFID technology is involved in various modules in libraries. For example, the tagging station to tag the RFID label on each library material and anti-theft security gates ensure the items are checked out before leaving the library. This measure works by detecting the RFID tags attached to the item and therefore activated. Besides, RFID technology is also prevalent in shelf management, such as the patrons can track by searching the items that were mis-shelved by using an RFID handheld reader. Figure 1 shows the overall system architecture of this project, SSLMS.

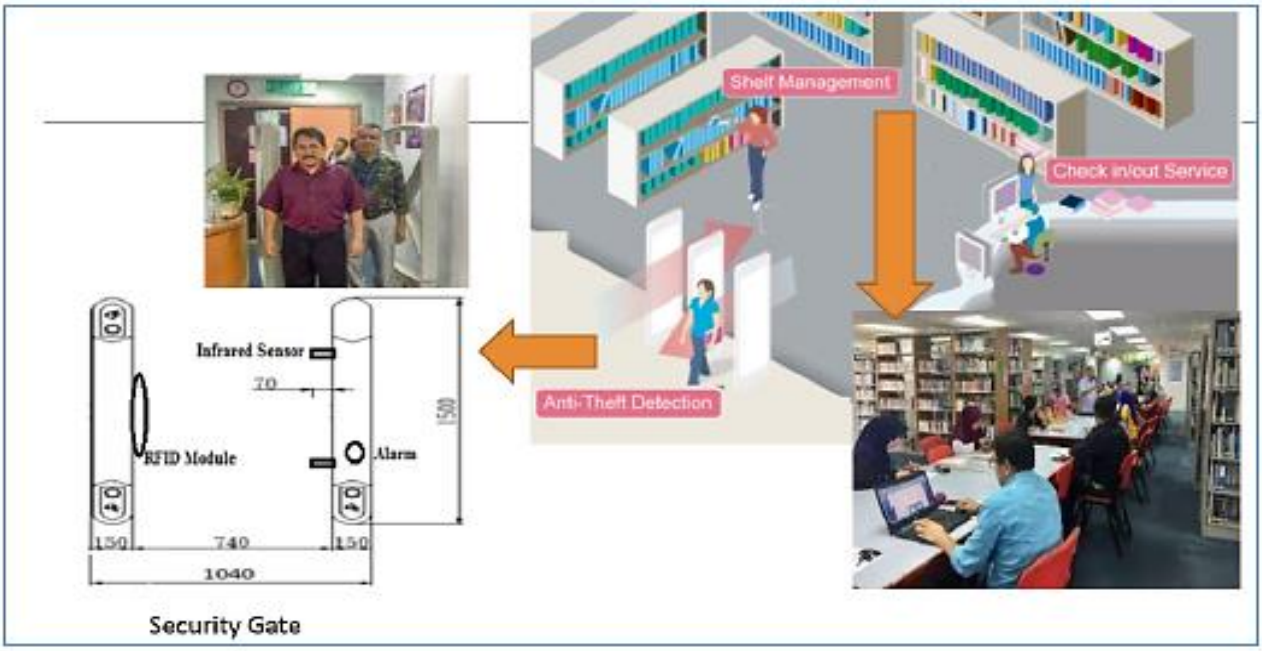

Fig. 1. Overall system architecture

2.2 Principal of Operation

A basic RFID system consists of three modules: Tags, Readers, and Antennas. An RFID tag comprises a coupling element and a chip; each tag has a unique electronic code attached to the object used to identify the target. RFID readers are devices used to retrieve and write information on RFID tags. There are two types of RFID tags primarily used in the market that are active and passive. Active RFID tags have a transmitter and power source (typically a battery). The power source is used to run the microchip's circuitry and broadcast a signal to a reader (how a cell phone transmits signals to a base station). Passive tags have no battery. This project uses the passive type.

There are handheld readers and fixed readers. Handheld readers are designed to act like handheld barcode scanners, and fixed readers are mounted to read tags automatically as items pass nearby. The antenna emits radio signals to activate the tag and read and write data. In this system, there are two parts: the self-check reader (loan and return) and book reader devices. Figure 2 shows that the self-check devices used for writing memory from RFID cards are embedded in the book, and the book's status will change from the return to the loan. According to the self-check device, the data and book ID will transfer and record by wireless to the IoT platform. Authorized persons can only access the IoT platform. According to data in the IoT platform, the user's name and the book ID loan will be recorded for authorized person reference.

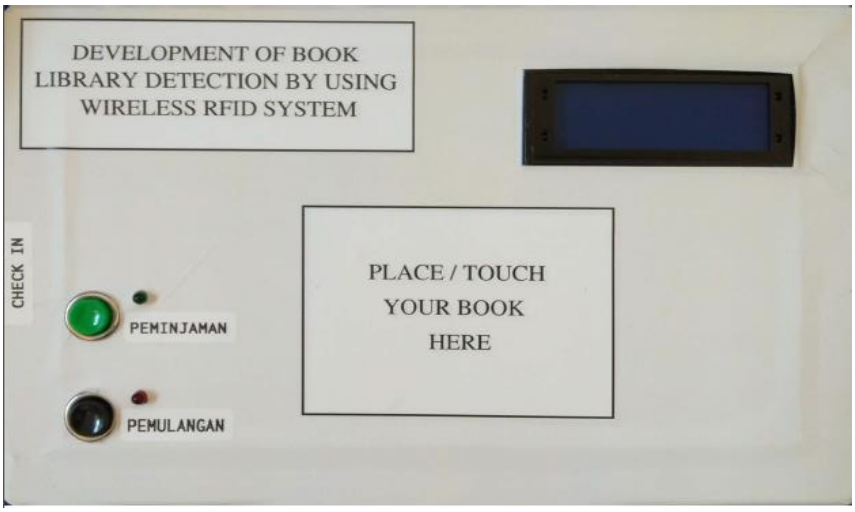

Fig. 2. RFID writer and reader

Figure 3(a) shows that a reader transfers energy to the transponder by emitting electromagnetic waves through the air. A transponder uses RF energy to charge up and receive data signals and respond accordingly. The reader receives a transponder response and sends it to a host computer or external devices through its control lines. The application of this project is on the in and out access gate. From here, the RFID receiver module will be applied. Besides, the alarm lamp and buzzer for the book indicator will be applied together. These systems are integrated into each other for complete system functioning. Figure 3(b) shows the illustration of the system diagram, and Figure 3(c) shows the reader/receiver RFID gate.

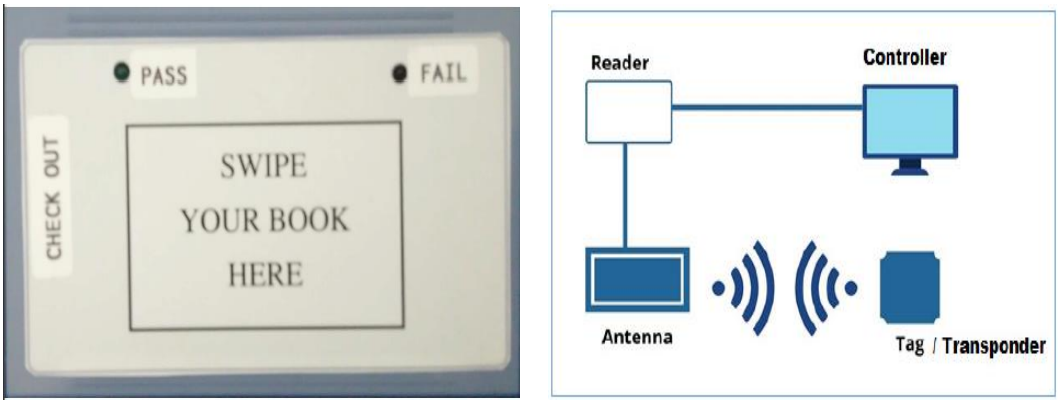

(a) (b)

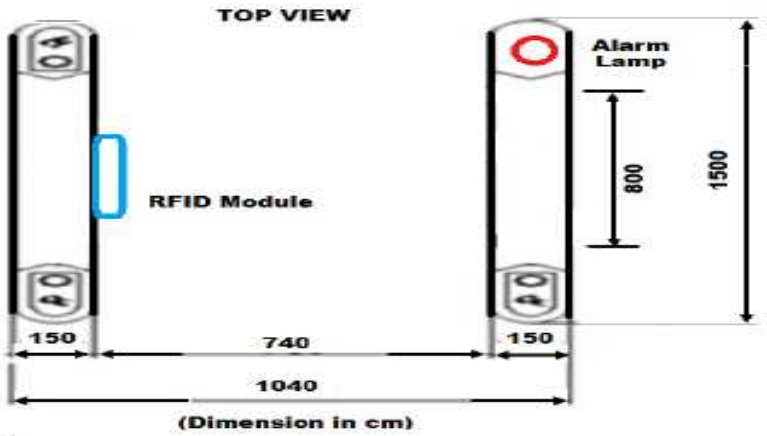

(c)

Fig. 3. Overall system devices (a) Reader (b) Concept of system (c) Receiver diagram

2.3 Flow Chart

Flowcharts are used in designing and documenting simple processes or programs SSLMS. Like other types of diagrams, they help visualize what is going on and thereby help understand a process of work or project. As shown in Figure 4, the flowchart shows the book issuing or loan and return process workflow. Books must be recorded at the user desk counter for loan and return conditions. Here the RFID reader/writer will detect the tag that has been attached to the book. Then the librarian will push the "PEMINJAMAN" pushbutton to write the tag's memory which is for loan condition, and the memory of the RFID transmitter/card will be recording the “Pinjaman_Buku_Li" status; otherwise, the status of the book is recorded the "Pulangan_Buku_Li “. In addition, the user ID and ID book will be recorded in the IoT cloud platform for monitoring. When the book is taken to cross the security gate, the RFID reader at the gate will detect whether the book has been recorded for loan condition “Pinjaman_Buku_Li” or return condition “Pulangan_Buku_Li". The alarm and buzzer at the security gate will activate once the RFID reader triggers the return condition "Pulangan_Buku_Li" condition. The alarm will be disabled after 5 seconds activates.

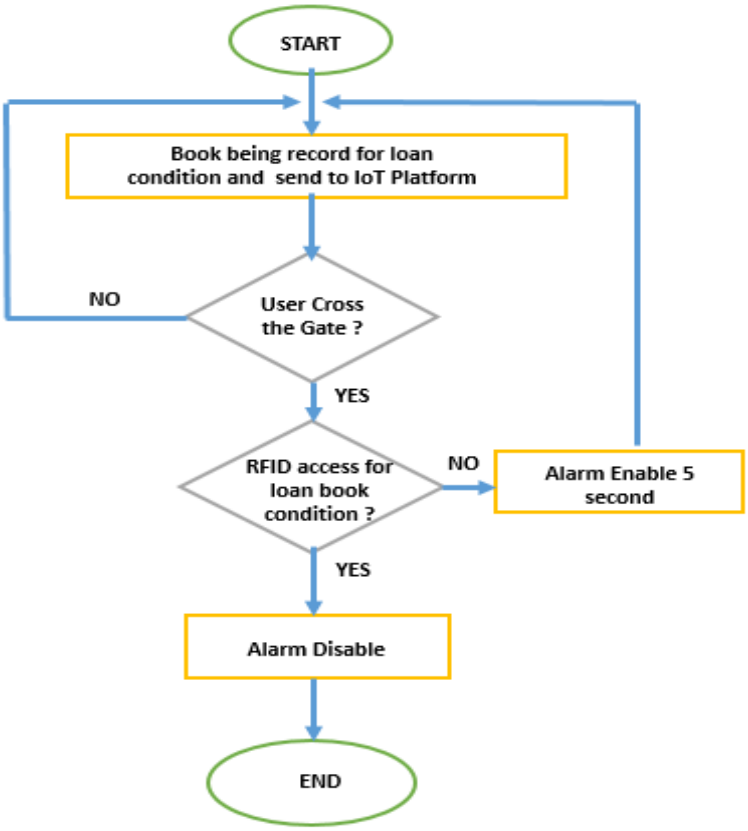

Fig. 4. Flow Chart for the overall process

2.4 Schematic Diagram

In RFID system development, two primary circuits have been built to ensure that the SSLMS can function very well. It includes the read/write circuit and reader circuit. The read/write circuit development was made for recording the user and book ID in the IoT platform and changing the book's status in RFID memory, either return or loan. Figure 5 shows the read/write circuit for changing the book's status on the memory of the RFID sticker. The read/write circuit consists of five parts, i.e., Microcontroller, RC522 module, LEDs, Button Selector, and LCD. RC522 module functions to read or write the id RFID sticker/card. The user should swipe the two stickers/cards. The first card is a user ID card, and the next is an RFID sticker in the book for ID recording. The book's status recording can be selected either for loan "PINJAMAN" or return "PULANGAN". The LED will be lit according to the "loan – Green LED" or "return - red LED" status button. Lastly, the LCD will display the book's status selected, and at the same time, all will be sent to the IoT platform for recording.

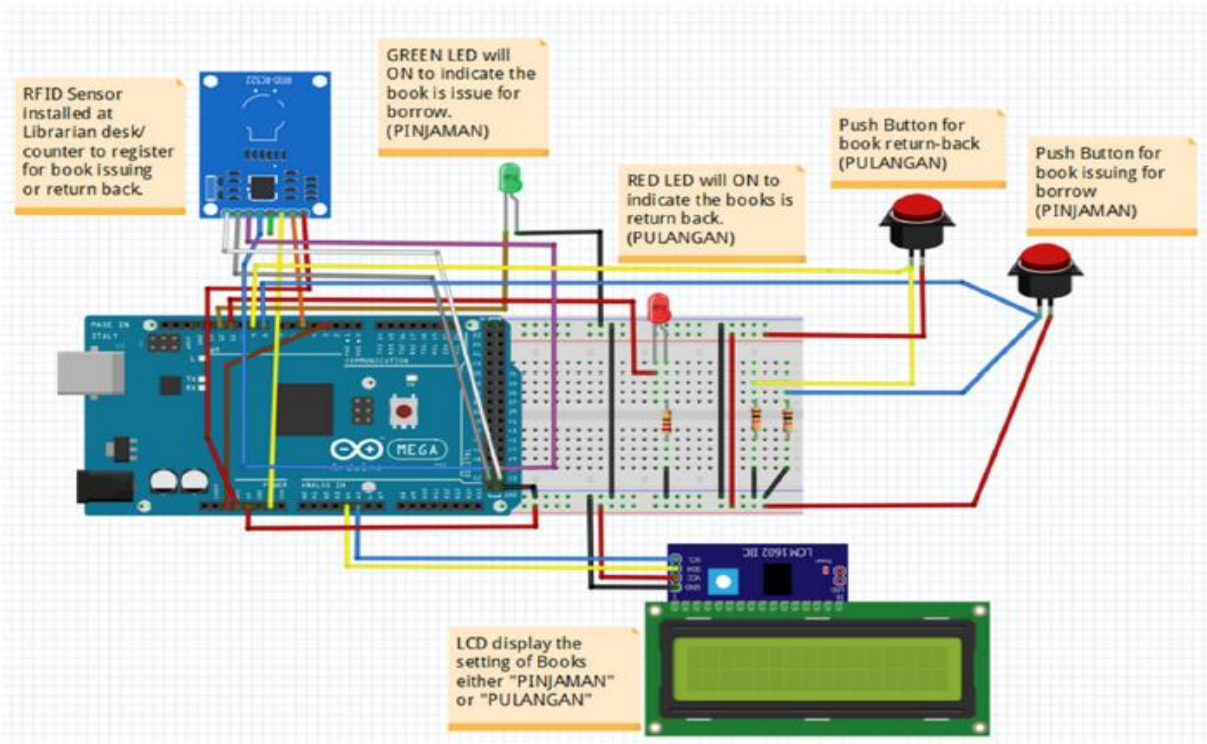

Fig. 5. Sketch wiring circuit module 1; RFID system at counter

The sketch shows a second schematic circuit that functions as a reader for reading the memory in the RFID sticker attached to the book. It then triggers the alarm when the status book is not in loan condition. Figure 6 shows the reader circuit that has been built. Here are four parts, i.e., microcontroller, RFID reader, LEDs, and buzzer. The RFID reader functions to read the book's RFID sticker/card status. If the RFID sticker/card is in status loan, the green LED will be lit in 2 seconds; otherwise, the red LED will be lit in 2 seconds, followed by the buzzer sound.

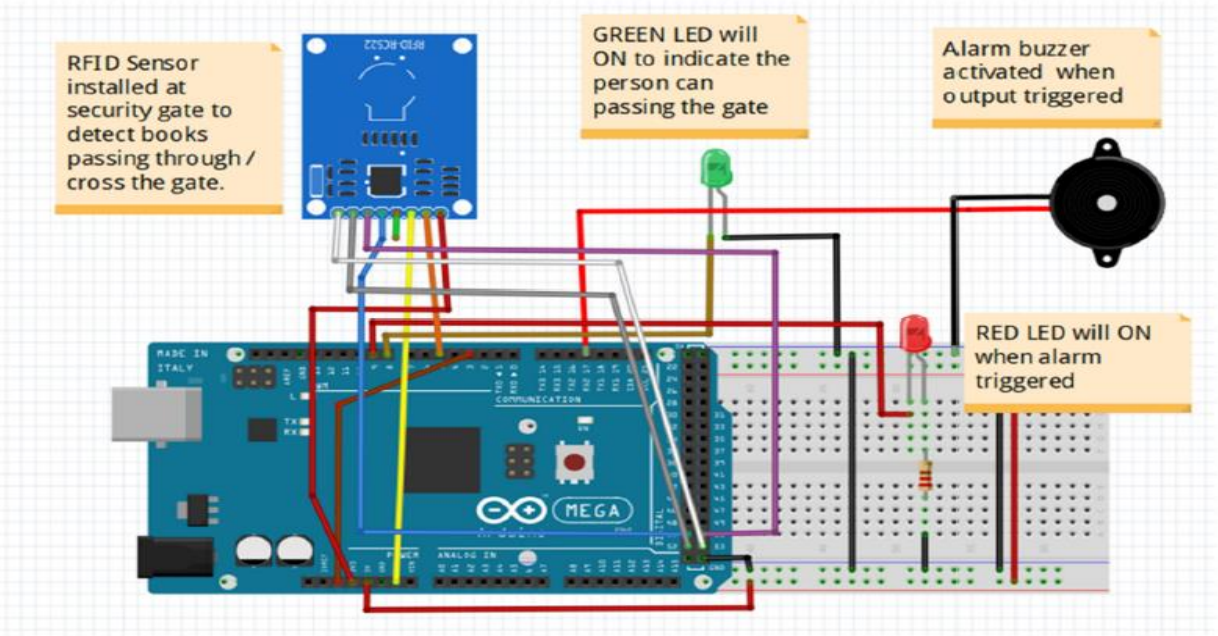

Fig. 6. Sketch wiring circuit module 2; RFID system at security

To ensure that the monitoring of incoming and outgoing books can be done, then the application of the IoT system has been built. The Blynk IoT platform has been used in recording the user ID and book ID, including the time, and all data were recorded in the Blynk cloud. The librarian / authorized person can monitor the number of books incoming and outgoing every day by using a smartphone or PC. The report of incoming and outgoing books in the Blynk IoT platform in CSV format can be transferred to a PC and can be opened by using Excel. Figure 7 shows the IoT Blynk platform used in this research for id-data collection.

Fig. 7. IoT Blynk platform

3. Results

The distance range detection is tested and verified by marking and testing the level of distance in cm with 4 different types of RFID tags. The range distance can be accurately obtained, and the data can be recorded for analysis. An ID RFID tag will be shown through the serial monitor, and from here, the distance range can be identified. Figure 8 shows the verification test conducted to get the correct distance range and the distance range being incremented by 0.5cm.

Fig. 8. Memory access for book conditioning

Table 1 shows that the sensitivity detection ranges between the RFID readers and different types of tags. The four types of RFID tags were used, i.e., card, sticker, keychain, and transparent card. The detection range is set to only 5cm according to the maximum sensitivity of detection on the reader. Each type of card was tested ten times using the sampling test. Based on the results, the card tag types indicated a higher detection range up to 90%. Sticker and keychain types followed suit with 70%, and lastly, the transparent card recorded a 40% detection range. According to the observation, the effect of material and thickness of the tag has a high effect on range detection in RFID systems.

Table 1
Data range detection from RFID reader and transmitter

Types of Card		Detection Distance (cm)									
		0.5	1.0	1.5	2.0	2.5	3.0	3.5	4.0	4.5	5.0
Card	(1)	YES	YES	YES	YES	YES	YES	YES	YES	YES	NO
Sticker	(2)	YES	YES	YES	YES	YES	YES	YES	NO	NO	NO
Keychain	(3)	YES	YES	YES	YES	YES	YES	YES	NO	NO	NO
Transparent Card	(4)	YES	YES	YES	YES	NO	NO	NO	NO	NO	NO

To prove that all parameters and data collected are significant, then the Design of Expert (DOE) software is used. The response surface with the Central Composite type is used to identify the optimum range detection of RFID based on the two inputs, i.e., distance and types of RFID. The ANOVA result shows that the range detection in Table 2 and all parameters used are significant. The significant value can be identified when the value of Prob>F is less than 0.05. The table below shows the value of Prob>F for A-Types of RFID and B-Distance, respectively 0.0006 and <0.0001. The Model F-value of 24.26298 indicates that the model is statistically significant. Due to noise, there is only a 0.01 percent chance that a "Model F-value" this large will occur. Model terms are significant when "Prob > F" is less than 0.0500. A and B are essential to model terms in this scenario. Values greater than 0.1000 indicate that the model terms are not significant. Model reduction may improve the model if there are many inconsequential model terms (not including those required to support hierarchy).

Table 2
ANOVA for response surface quadratic model analysis of variance table [Partial sum of squares - Type III]

Source	Sum of Squares	df	Mean Square	F Value	p-value Prob > F	
Model	5.871212	3	1.957071	24.26298	< 0.0001	significant
A-Types RFID	1.125	1	1.125	13.9473	0.0006	
B-Distance	4.261364	1	4.261364	52.83068	< 0.0001	
B^2	0.484848	1	0.484848	6.010957	0.0192	
Residual	2.903788	36	0.080661			
Cor Total	8.775	39				

The relation between distance, types of RFID, and detection can be translated in the 3D graph below in Figure 9. The red color represents the maximum or optimum value and the blue color for the minimum value. According to the figure below, the maximum detection can be found using RFID type 1 (Card type), which can be reached until a 4.5cm distance range detection. The sensitivity of detection is low after passing the 4.5cm range distance. The lower or minimum distance detection is shown using RFID type 4 (transparent card), which can only achieve up to 2.75cm, representing a green color. The higher detection can be found when the distance RFID tag near the reader means that the distance range is lower than 0.5cm.

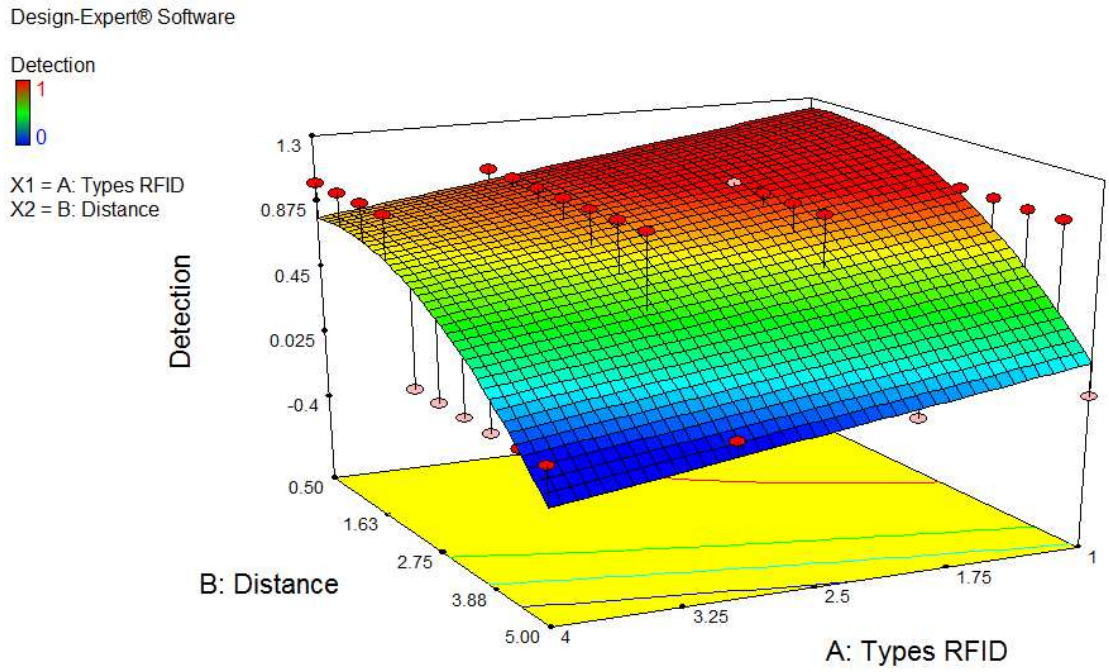

Fig. 9. 3D surface graph for detection condition, types of RFID, and distance range detection

Based on the sampling data analysis from ANOVA, the mathematical modeling is shown in Eq. (1) and Eq. (2) for the relationship between distance and types of tag RFID and the resulting detection sensitivity. Where A represents the Types of RFID and B is the distance range.

Final Equation in Terms of Coded Factors:

$$\text{Detection} = (+0.80) - (0.23*A) - (0.51*B) - (0.31*B^2) \quad (1)$$

Final Equation in Terms of Actual Factors:

$$\text{Detection} = (+1.34167) - (0.15000*\text{Types RFID}) + (0.10606*\text{Distance}) - (0.060606*\text{Distance}^2) \quad (2)$$

4. Conclusions

Finally, this work has successfully developed and characterized the design of an adaptive RFID RC522 on an IoT platform with different types of passive tags based on self-service library management systems. In this project, the RFID RC522 reader is used, which has several characteristics to boost performance and energy-saving, and power optimization. With card tag kinds, the maximum distance that the RFID reader can obtain after the analysis is 4.5cm, and the reader can also identify the book even when barriers are present. The proposed library system solution improves user management by lowering the number of librarians at the counter. Future researchers can improve the technology to enhance the RFID system's detecting range. For example, instead of utilizing an RC series RFID reader (RC522), a PN series RFID reader (PN532, PN5180) can be used because of its reliable range detection of up to 10 meters.

Acknowledgement
We would like to express our gratitude to UC TATI for the Short Term Grant (STG) 9001-2106 SP, facilities, and equipment provided for this research. The authors also hope that more collaborative research between UC TATI and the library can be carried out in the future to promote academic development while contributing to the development of technology in the country.

References
[1] Biswas, Alamgir. "Applicability and usability of RFID technology in library." *Learning Community-An International Journal of Educational and Social Development* 7, no. 1 (2016): 53-59. https://doi.org/10.5958/2231-458X.2016.00006.3
[2] Pandey, Prabhat, and K. D. Mahajan. "Application of RFID technology in libraries and role of librarian." In *12th MANLIBNET Convention*, pp. 22-24. 2010.
[3] Jaafar, Nurulaini, Siti Rohani Mohd Nor, Siti Mariam Norrulashikin, Nur Arina Bazilah Kamisan, and Ahmad Qushairi Mohamad. "Increase Students' Understanding of Mathematics Learning Using the Technology-Based Learning." *International Journal of Advanced Research in Future Ready Learning and Education* 28, no. 1 (2022): 24-29.
[4] Bukova, Bibiana, Jiri Tengler, Eva Brumercikova, Frantisek Brumercik, and Olga Kissova. "Environmental Burden Case Study of RFID Technology in Logistics Centre." *Sensors* 23, no. 3 (2023): 1268. https://doi.org/10.3390/s23031268
[5] Alsumaidaee, Yaseen Ahmed Mohammed, Chong Tak Yaw, Siaw Paw Koh, Sieh Kiong Tiong, Chai Phing Chen, and Kharudin Ali. "Review of Medium-Voltage Switchgear Fault Detection in a Condition-Based Monitoring System by Using Deep Learning." *Energies* 15, no. 18 (2022): 6762. https://doi.org/10.3390/en15186762
[6] Casella, Giorgia, Barbara Bigliardi, and Eleonora Bottani. "The evolution of RFID technology in the logistics field: a review." *Procedia Computer Science* 200 (2022): 1582-1592. https://doi.org/10.1016/j.procs.2022.01.359
[7] Jadhav, Chethan J., Shivani S. Jadhav, Vijay M. Sancheti, and Shailesh S. Hajare. "Smart library management system using rfid technology." *International Research Journal of Engineering and Technology* 4, no. 5 (2017): 2831-2834.
[8] Lum, Kin Yun, and Tian Swee Tan. "Improved Transfer Efficiency of Wireless Power Transmission System featuring Coil-Size Disparity." *Progress in Energy and Environment* 2 (2017): 9-16.
[9] Abcouwer, Kasper, and Emiel van Loon. "Library inventory using a RFID wand: contribution of tag and book specific factors on the read rate." *Library Hi Tech* 39, no. 2 (2021): 368-379. https://doi.org/10.1108/LHT-06-2019-0129
[10] Huo, Hai'E., Yanhong Ji, Kuihua Xie, and Yu Lu. "Design and Application of Intelligent Construction Quality Inspection System Based on BIM-RFID." *Advances in Civil Engineering* 2023 (2023). https://doi.org/10.1155/2023/5638265
[11] Radhakrishna, Kavinesh, Khairul Najmy Abdul Rani, Alawiyah Abdul Wahab, Siti Julia Rosli, Hasliza A. Rahim, Lee Yeng Seng, Mohd Hafizi Omar, and Khairul Affendi Rosli. "Design of A 20-Bit Chipless RFID Tag Utilizing Multiple Resonators in UWB Frequency Range." *Journal of Advanced Research in Applied Sciences and Engineering Technology* 29, no. 2 (2023): 25-37. https://doi.org/10.37934/araset.29.2.2537
[12] Zhang, Xiaoqiang, and Manos Tentzeris. "Applications of fast-moving RFID tags in high-speed railway

systems." *International journal of engineering business management* 3, no. 1. (2011): 27-31. https://doi.org/10.5772/45676

[13] Pattanaik, Bibhuti-Bhusan, and Babita Pattnaik. "RFID: the security for library." (2007): 219-231.

[14] Singh, Neeraj Kumar, and Preeti Mahajan. "Application of RFID technology in libraries." *International Journal of Library and Information Studies* 4, no. 2 (2014): 1-9.

[15] Yusof, Mohd Kamir, and Md Yazid Saman. "The adoption and implementation of RFID: a literature survey." *LIBRES: Library and Information Science Research Electronic Journal* 26, no. 1 (2016): 31. https://doi.org/10.32655/LIBRES.2016.1.3

[16] Kunju, Aju John Kunju, Manju Abraham, and Thomaskutty Mathew. "SRR loaded compact UHF RFID tag for broadband operation." *Progress In Electromagnetics Research C* 70 (2016): 175-182. https://doi.org/10.2528/PIERC16090506

[17] Sungkur, Yash Gupta, Azhar MS Ozeer, and Soulakshmee D. Nagowah. "Development of an IoT-enabled smart library system for a university campus." *Journal of Telecommunication, Electronic and Computer Engineering (JTEC)* 13, no. 1 (2021): 27-36.

[18] Jie, Ng Xin, and Intan Farahana Binti Kamsin. "Self-Checkout Service with RFID Technology in Supermarket." In *3rd International Conference on Integrated Intelligent Computing Communication & Security (ICIIC 2021)*, pp. 495-502. Atlantis Press, 2021. https://doi.org/10.2991/ahis.k.210913.062

[19] Ali, Kharudin, Ahmad Joraimee Mohamad, Damhuji Rifai, Mohd Badrulhaswan Besar, M. Amirul Ikhmal, Nor Hana Mamat, Raja Siti Nur Adiimah Raja Aris, Johnny Koh Siaw Paw, and Ahmed N. Abdalla. "IoT System Design of Thermoelectric Generator for Harvesting Motorcycle Exhaust Heat Energy." In *Control, Instrumentation and Mechatronics: Theory and Practice*, pp. 213-226. Singapore: Springer Nature Singapore, 2022. https://doi.org/10.1007/978-981-19-3923-5_19

[20] Hormia-Poutanen, Kristiina, Minna-Liisa Kivinen, Nina Hyvönen, Maria Virtanen, and Osma Suominen. "Renewing the Library System Environment in Finland–What We Have and What We Need." *Bibliothek Forschung und Praxis* 40, no. 3 (2016): 319-327. https://doi.org/10.1515/bfp-2016-0066

[21] Choe, Wcc, Yh Teh, Yw Low, T. Eltaif, Kn Minhad, Jd Tan, And Mas Bhuiyan. "Design Of Attendance Information System Using Rfid." *Journal of Engineering Science and Technology* 18, no. 1 (2023): 257-275.

[22] Khairul Azizan, Suda, and Abdul Rani Nazatul Shima. "Radio frequency identification for efficient library management." *International Journal of Business and Social Science* 4, no. 15 (2013).

[23] Charris, Daniela, Diego Gomez, Angie Rincon Ortega, Mauricio Carmona, and Mauricio Pardo. "A thermoelectric energy harvesting scheme with passive cooling for outdoor IoT sensors." *Energies* 13, no. 11 (2020): 2782. https://doi.org/10.3390/en13112782

[24] Wahab, Norhaliza Abdul, and Zaharuddin Mohamed, eds. *Control, Instrumentation and Mechatronics: Theory and Practice*. Vol. 921. Springer Nature, 2022. https://doi.org/10.1007/978-981-19-3923-5

[25] Koppikar, Unnati, Shobha Hiremath, Akshata Shiralkar, Akshata Rajoor, and V. P. Baligar. "IoT based smart attendance monitoring system using RFID." In *2019 1st International Conference on advances in information technology (ICAIT)*, pp. 193-197. IEEE, 2019. https://doi.org/10.1109/ICAIT47043.2019.8987263