ResearchGate

See discussions, stats, and author profiles for this publication at: https://www.researchgate.net/publication/372639042

Radio Frequency Identification (RFID) Based Library Management System

Article *in* International Journal of Technology and Systems · July 2023

DOI: 10.47604/ijts.2041

CITATIONS
3

READS
374

4 authors, including:

Habeeb Shittu
North Carolina Agricultural and Technical State University

9 PUBLICATIONS **6** CITATIONS

SEE PROFILE

All content following this page was uploaded by Habeeb Shittu on 05 June 2025.

The user has requested enhancement of the downloaded file.

International Journal of
Technology and Systems
(IJTS)

Radio Frequency Identification (RFID) Based Library Management System

Moshood Yusuf, Adigun Akintunde and Shittu Habeeb

International Journal of Technology and Systems
ISSN 2518-881X (Online)
Vol.8, Issue 2, No.2, pp 21 – 35, 2023

www.iprjb.org

Radio Frequency Identification (RFID) Based Library Management System

Moshood Yusuf
College of Engineering: Osun State University, Osogbo, Nigeria
Corresponding Author Email: moshoodyusuf413@gmail.com

Adigun Akintunde
Osun State University, Osogbo, Nigeria

Shittu Habeeb
Osun State University, Osogbo, Nigeria

Adeyinka Quadri
Osun State University, Osogbo, Nigeria

Article History

Received 30th June 2023

Received in Revised Form 15th July 2023

Accepted 25th July 2023

How to cite

Yusuf, M. ., Akintunde, A., Habeeb, S., & Quadri, A. (2023). Radio Frequency Identification (RFID) Based Library Management System. International Journal of Technology and Systems, 8(2), 21–35. https://doi.org/10.47604/ijts.2041

Abstract

Purpose: The aim of this project is to design and build a library management system based on radio frequency identification that will help the librarian manage the shelves with less human involvement.

Methodology: A dc supply at +5volts was connected to the microcontroller, with a voltage of +12volts dc connected to the buzzer, and a step-down transformer was used to convert 220volts to 5volts in this system. This power supply was connected to the switch, and by pressing a switch button, the current passed through the entire circuit. RFID collects all the data from the RFID tag. Using a UART module, the EM-18 RFID reader module was connected to 5v pic microcontrollers. The EM-1 RFID reader will read the tag number from an RFID tag when it is placed in its field of operation and output the information via a TX terminal. In order to signal successful tag detection, the beep terminal will turn low. Once the card is in front of the RFID reader, the student extracts the data from it and compares it to the data that is stored in the microprocessor, which is coded using embedded c language. If the data matches, the information is shown on the LCD.

Finding: A library management system based on radio frequency identification and detection (RFID) was developed in this study to improve library use and management. To efficiently identify and manage the books, it will make use of the RFID reader. The student can search the database and, if the book is available, pick it up from the library because the database displays the book's availability at the library. The main advantages of this project in libraries include time savings, quick access to books, and the elimination of manual errors.

***Unique Contribution to Theory, Practice and* policy:** Every inventive technical design has its limits. This passive RFID-based library management system has some limitations as a technology for precise data collection. This study recommend that the RFID reader should be improved so that it has finger and thumb print access, which is needed to access student data and details. However, it should also include a facial recognition application, which would further strengthen the biometric security of the system and protect it from impersonation by careless students.

Keywords: *Library management system (LMS), RFID Reader, RFID tag, Microcontroller*

INTRODUCTION

The provision of library services like book borrowing, user information tracking, etc. has been worked on over the years with the goal of making them easier. Since the middle of the 1950s, computer-based systems known as library management systems (LMS) have evolved to automate some or all of the functional areas of a typical library (Tirupathi,R., 2014).In later years, LMS has also been called Integrated Library Systems (ILS) to reflect the fact that all operations are controlled by a single database, or what is now known as a solo application, with processes that transparently exchange data between functional components like catalog records and circulation transactions (Moses, K., 2018). Some LMS included interfaces to common tools like Microsoft Excel at the end of the 1990s for the presentation of statistical data.

In the near future, radio-frequency identification (RFID) devices will become more prevalent and have a significant impact on our daily lives. The adoption of RFID technology has seen a phenomenal increase in recent years (Pawar, Shegaonkar, & Udane, 2016). Research and development in this area have made it possible to apply this technology for automated toll collection, supply chain management, attendance tracking, and other applications. RFID is a form of electronic technology that allows a reader to access digital data that has been encoded in an RFID tag. Unlike bar code technology, which requires line-of-sight access to the tag in order to get its data, RFID systems do not. Bar codes will undoubtedly be replaced by passive RFID in library applications. The bar-code technology used in libraries requires a lot of time and labor. The bar-code system used in libraries is very time-consuming and labor-intensive. Using RFID-enabled modules, the RFID-based LMS makes it easy to quickly issue, reissue, and return books. Without the need for manual typing, it directly connects the library management system with information about books and members. Without having to be directed to a different database, the RFID tag can include identifying information that is particular to the item, such as the title or barcode of a book. An RFID reader, which takes the place of the typical barcode reader typically seen at a library's circulation desk, reads the data. In order to automatically identify and track objects, Radio Frequency Identification (RFID) employs radio frequency electromagnetic waves to transmit data from tags affixed to the objects. A Radio-Frequency Identification system consists of a scanning antenna, a transceiver with a decoder to interpret the data, and a transponder, which is an RFID tag that has been programmed with information. The scanning antenna transmits radio-frequency signals over a comparably narrow area.

Statement of problem

Libraries play a crucial role in disseminating knowledge and providing resources to students, researchers, and the community. However, traditional library management systems often encounter various challenges, hindering their efficiency and overall user experience. However, this study seeks to overcome these challenges by providing an efficient, secure, and user-friendly environment for library users and staff. By automating processes, improving inventory management, enhancing security, and offering valuable data insights, the RFID-based system aims to revolutionize the way libraries operate, ultimately enriching the overall library experience for all stakeholders.

Aim

The aim of this project is to design and build a library management system based on radio frequency identification that will help the librarian manage the shelves with less human Involvement.

Objectives

The objectives of this project are to:

- Build a system that can receive input and generate automatically output in easy way and short time.
- Build a monitoring system that is able to monitor and manage all library operations efficiently.
- Be able to enter and preserve details of the various issues and keep a track on their returns.

LITERATURE REVIEW

Using radio waves, Radio Frequency Identification (RFID), a new generation of auto identification and data gathering technology, can identify numerous tagged things, including books, and assist in automating corporate processes. An RFID reader and an RFID tag must cooperate to some degree in order for the technology to work. These technologies' main function is to recognize objects, autonomously gather information about them, and update that information into a computer system without the need for human intervention (Potdar, Wu, & Chang, 2010). RFID is an electromagnetic proximity identification and data transaction system.

Parul Gupta (2016) and Margam Madhusudhan (2016) conducted a literature review from an Indian perspective, highlighting the significant progress of Radio Frequency Identification (RFID) technology in various applications and its potential uses. While RFID has been extensively utilized in logistics, inventory control, aviation security, road, and rail sectors, its adoption in libraries, especially in developing economies like India, is still in its early stages. Librarians, following the fifth law of library science that emphasizes growth, are eager to embrace cutting-edge technologies for better and more efficient services. RFID has indeed revolutionized library services, benefiting both patrons and professionals compared to traditional barcode systems. However, the major hindrance in its widespread implementation in countries like India remains the high cost of setup and maintenance.

According to Ramanathan, Wan, & Ko (2014), the fundamental components of an RFID system typically consist of the following: An RFID tag, an RFID reader equipped with an antenna and transceiver, and a connection to an enterprise system. RFID tag can be categorized into two types: RFID tag with a power supply (battery) and RFID tag without a power supply. The former is known as transponders or "active tags," while the latter is simply referred to as "passive tags." Active tags are more expensive but have a longer life, while passive tags are lighter, smaller, and cheaper. Tags may incorporate read-only memory (ROM), volatile read/write random access memory (RAM), or write once/read many memory (WORM). The RFID antenna acts as a bridge between the RFID tags and the reader, emitting radio waves that activate the tags when they enter

the activation field. Once activated, the antenna facilitates the exchange of information between the RFID reader and the tags.

RFID technology is mostly used to convert the library system from a semi-automated to an entirely automated mode (Chan & Ying, 2005). It offers improved inventory control, reliability, and circulation capabilities (Ayre, 2006). By reducing book or library asset theft, it improves security (Golding and Tennant, 2008). According to Roy & Kumar (2016), patrons are quite happy with the RFID applications in the library. Due to its 24-hour availability, the hostellers were able to return their books even in the evening. The book drop box facility was discovered to be extremely well received by the user group. After the deployment of RFID, self-checkout and self-check-in of books rose as a result of the impact of RFID technology on library services and activities. According to a different study, RFID is more effective at lowering book thefts. The RFID technology had a significant influence on the students' motivation because it made it quicker and easier to obtain the books supplied and returned.

To tackle the issue of non-standardization among public libraries implementing RFID technology, (Butters) suggests adopting standardized practices. This investigation focuses on two vital aspects: the security and privacy concerns related to RFID technology. Molnar and Wagner (2004) conducted research on RFID security to assess the data integrity during transfers between RFID tags and readers. Their findings revealed that the data are not adequately secure, leading them to recommend the implementation of encryption and authentication techniques to enhance security measures.

Historical overview of the research literature

In order to understand the evolution of RFID technology and its usefulness in the public library setting, the author begins the chapter with a review of barcode technology. Although barcodes can be replaced by an RFID solution, barcode technology remains in use in a majority of public libraries (Haley et al., 2007). A barcode is a set of lines read by an optical laser that requires direct line-of-sight. Each barcode is unique and is linked to an item record in the library database. Barcode technology requires that each item be handled physically to be aligned with the optical laser reader.

RFID limitations in the public library environment

Basic RFID systemThe advantages of RFID technology in the setting of a public library are alluring, according to Curran and Porter (2007). But it's also important to take into account the limitations of this technology. Cost increases, security concerns, a lack of standards, and privacy issues are some of the drawbacks of RFID technologies (Boss, 2009). RFID systems are implemented in public libraries by vendors like Bibliotheca, Checkpoint, ID Systems, Libramation, 3M, and TAGSYS. According to D. M. Ward (2007), the implementation costs differ from vendor to vendor and depend on the precise needs indicated by a public library system, such as the quantity and types of documents to be tagged. Every piece of library equipment that will be distributed needs its own RFID tag. Depending on the type of RFID tag chosen, the price for a single tag can range from $0.50 to $1.50 (Ayre, 2006c; Boss, 2009). Costs for typical RFID tags placed inside books range from $0.50 to $0.70. The cost of RFID tags for other types of media,

including CDs, DVDs, and tapes, is between $1.00 and $1.50 (Ayre).

The procurement of new security gates, circulation readers, self-checkout stations, sorting equipment, and inventory wands are additional costs connected with public library RFID installations (Haley et al., 2007). A full-scale public library RFID system is estimated to cost between $70,000 and over $1 million. According to one library, the cost of implementing an RFID system for 500,000 items was $1.1 million (Ayre). A RFID implementation's human resource expenses must also be taken into account (Haley et al.). Every tag and every item that is disseminated must be programmed (Ward). Additionally, the interfaces between the ILS and the RFID system need to be set up (Ward). The costs associated with human resources will vary based on the needs of each participating public library, but they should be taken into account before implementation (Curran and Porter, 2007).

Benefits of RFID technology in a public library setting

RFID technology helps public libraries manage their inventory and provide better customer service. With the implementation of RFID, the patron now assumes responsibility for the checkout function rather than the library staff (Ward, 2007). Because employees are available to patrons while not working at the checkout desk, a reduction in checkout queues at the library caused by patron self-checkout leads to better customer service (Boss, 2009). The circulation staff can manage interlibrary loans, issue new cards, process fines, give directions, and answer inquiries instead of performing routine checkout duties (Yu, 2007). Along with self-checkout, an RFID solution enables an RFID reader to scan numerous things concurrently, allowing for the simultaneous checkout of a stack of patron materials up to 6 inches thick. When compared to library employees who use the single-item checkout process utilized with barcode systems, customers who are familiar with the RFID self-checkout process show faster checkout times for multiple item transactions (Haley et al., 2007).

Basic RFID system

A basic Radio Frequency Identification (RFID) system consists of three components;

An Antenna or coil

The antenna is located inside the reader. An electromagnetic field is produced. A tag becomes activated whenever it is in close contact with an electromagnetic field and is then able to read and write data to the reader by sending out radio signals. An antenna acts as a medium of communication between the reader and the tag.

A Transceiver (with decoder)

The RF energy utilized to activate and power the passive RFID tags comes from the RF transceiver. The reader and RF transmitter could both be housed in the same cabinet, or they could be distinct pieces of technology. The transceiver is frequently referred to as an RF module when it is offered as a separate piece of hardware. The radio frequency that the antenna emits and receives are modulated and controlled by the RF transceiver. The backscatter signal from a passive RFID tag is filtered and amplified by the transceiver.

A Transponder (RF tag)

An antenna for receiving and transmitting the signal, a substrate, and a microchip—an integrated circuit that stores, processes, and modulates information—are the three components that make up an RFID tag. In a non-volatile memory, the tag data is kept. The fixed or programmable logic of the RFID tag is used to process the transmission and sensor data, respectively.

RFID frequency bands

A frequency band is a segment of the spectrum that falls between two limitations, particularly when it comes to communications. A system's frequency range is the range throughout which it is thought to work satisfactorily, such as by producing a meaningful level of signal with acceptable distortion characteristics. In Table 1, the RFID frequency band is shown.

Table 1: Frequency band

Band	Regulations	Range	Data speed
LF:120-150kHz	Unregulated	10cm	Low
HF:13.56MHz	ISM band worldwide	10cm-1m	low to moderate
UHF:860-960MHz	ISM band	10m-15m	Moderate

Principle of operation

The antenna allows the chip to transmit a signal to the reader device so that the object can be remotely recognized by picking up radio waves or electromagnetic energy that is directed at it by the reader device. The reader transforms the radio waves that the object reflects back into digital data that may subsequently be sent to another device for processing.

SYSTEM DESIGN AND METHODOLOGY

Block Diagram

The block diagram of a Radio Frequency Identification (RFID) library management system is shown in Figure 1. This particular application is a low power low frequency (125 kHz) tag reader for identification cards. As shown in Figure 1, the block diagram consists of three main subsystems which are Transceiver, a Decoder and a Display module.

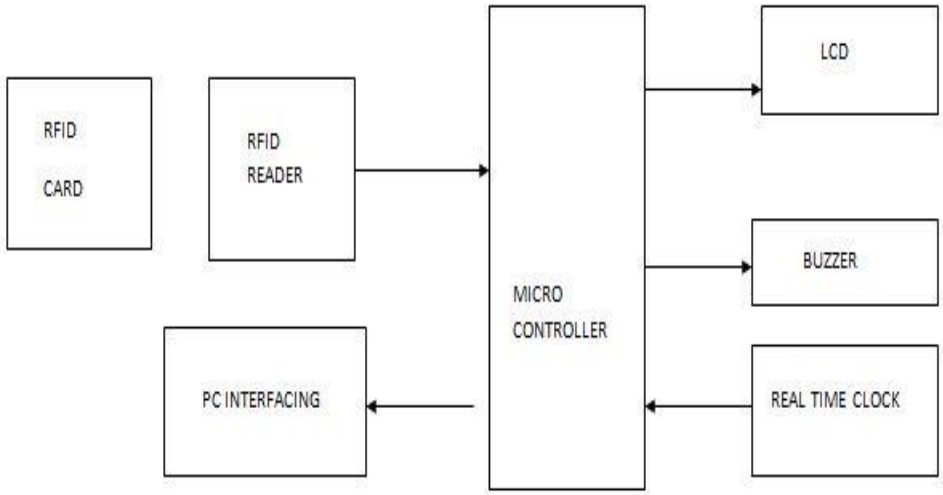

Figure 1: Block diagram description of the block diagram

The following are the various component of the device.

RFID Reader

RFID's complete name is RFID readers and RFID tags communicate using radio frequency identification (RFID). Readers don't need to have a direct line of communication with tags. This means that even with an object in between the reader and the card, the reader can still identify RFID tags. This kind of reader does not attend conclaves. A low frequency (LF), or 125 kHz, was used in our reader as the radio frequency. Serial port was used for the interface between the RFID reader and the microcontroller. When an RFID tag comes into contact with the reader module's rays and an RFID card is detected, the RFID reader will connect with the microcontroller using serial communication. At this point, the RFID reader will broadcast a series of alphanumeric unique codes across the serial port. Therefore, before adding the student card number to the computer memory, we must first record a string of alphanumeric code in the program. The incoming card number will be compared with a special series of codes. The output of the RFID card reader module is provided on the D89 connector port and it needs a volt power source.

RFID Card

The two primary types of RFID cards are passive and active. As mentioned in the introduction, we employed passive RFID in this projects; alternatively, we might have used regular RFID tags, which are the size of a credit card. In addition to using RFID tags that may be connected to key chains, these are rectangular, white, and can be affixed to ID cards.

Microcontroller

It is the primary part of the project. The primary source of device operating control is a microcontroller. The crystal oscillator's 8 MHz external clock frequency is used by the microcontroller to run its circuitry. The embedded peripherals (modules) required for the device's

functionality are present. These peripherals include the Serial Peripheral Interface (SPI) modules and the Enhanced Universal Synchronous Asynchronous Receiver Transmitter (EUART).

Real-time Clock

A real-time clock is a computer clock that records the current time. These clocks are often integrated circuits.

Buzzer

For demonstration purposes, we employed a 12-volt buzzer, which will activate upon the use of an invalid card.

Liquid Crystal Display (LCD)

The project's findings are displayed on the LCD. A 16x2 LCD has two lines, each of which can display 16 characters. On this LCD, each character is displayed using a 5x7 pixel matrix.

Circuit Diagram

To carry out any function, every electronic system and device needs a power source. What is required for each section goes a long way. For the microcontroller, the contact sensor requires a DC supply at +5 volts, and the buzzer needs voltage at +12 volts DC. To convert 220 volts to 5 volts in this system, a step-down transformer was used. This power supply was connected to the switch as shown in figure 2 below and by pressing a switch button, the current is passed through the entire circuit. RFID reader collects all the data from the RFID tag.

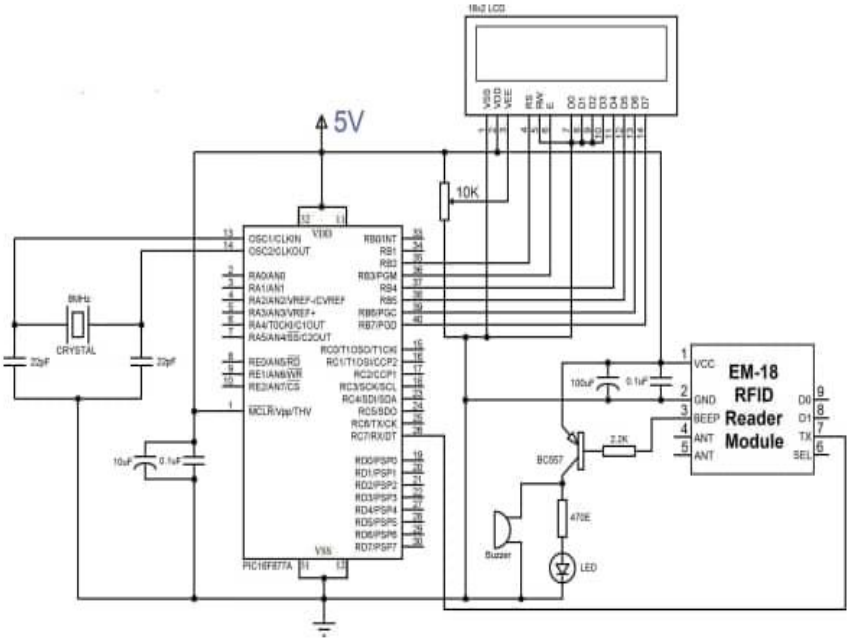

Figure 2: Circuit Diagram

Using a UART module, the EM-18 RFID Reader Module was connected directly to the 5V PIC

Microcontrollers. The EM-1 RFID Reader will read the tag number from an RFID tag when it is placed in its field of operation and output the information via a TX terminal. In order to signal successful tag detection, the BEEP terminal will turn LOW. The identification and attendance of the person are terms used to describe the information included in the tag. Once the card is in front of the RFID reader, the student extracts the data from it and compares it to the data that is stored in the microprocessor, which is coded using embedded C language. If the data matches, the information is shown on the LCD.

Software

The software used in this design are C programming language, visual basic and PC software development

Website

Based on Figure 3 below, each library user can access his or her account, check personal transaction details, and learn about the books that are now available through the website that has been built. As data is automatically uploaded, this cuts down on the amount of time needed for transactions and long lines. Due to the accessibility of the internet, a great number of users, regardless of the variety of devices, may access it.

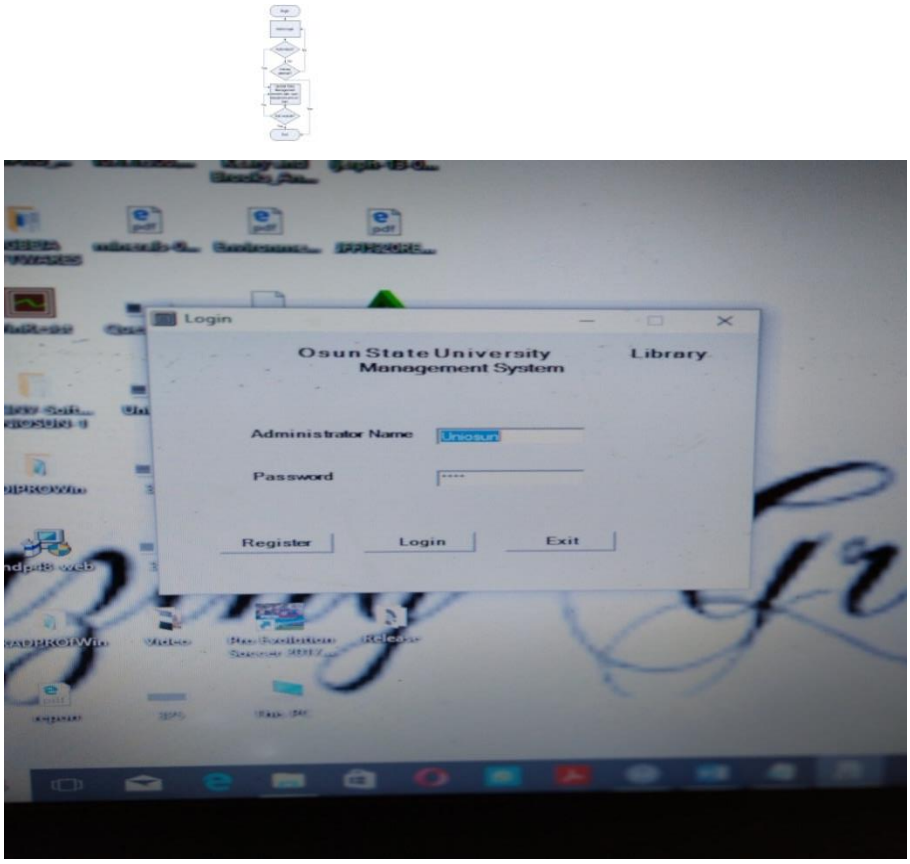

Figure 3: Web Interface

DISCUSSION AND RESULTS

The main reason for this chapter is based on the construction and testing of the project. The result of this design was the use of RFID technology that tracks offenders and identifies the books stolen from the library.

Circuit Board

Before attaching the components to the board, a thorough inspection was performed; each copper trace was checked for continuity and to make sure there were no short circuits between adjacent traces. To make sure the board can be powered for the first time safely, this is necessary. Only the components of the power supply unit were installed on the printed circuit board, as shown in Figure 4 below, and the board was energized prior to the test in order to evaluate the voltages at each terminal before being fed to such delicate and significant components.

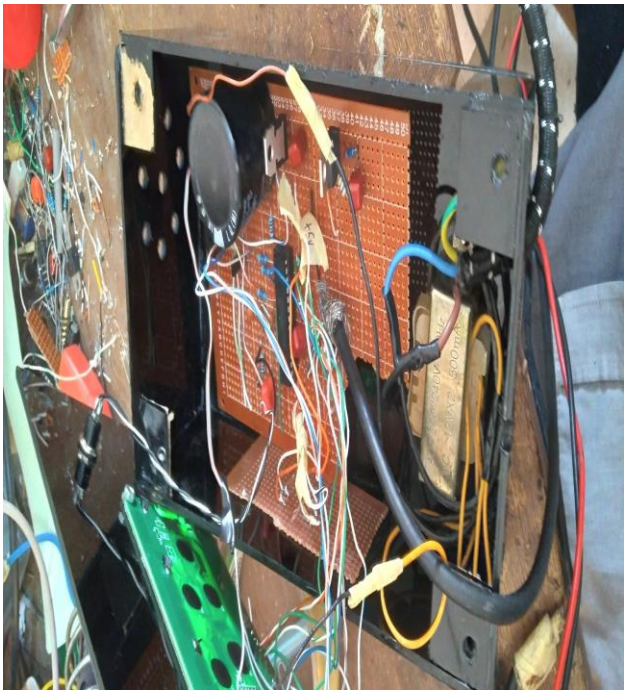

Figure 4: Component Mounted On the Circuit Board.

System Operation

When the library purchases a new book, an RFID tag is affixed to it that contains the necessary information, such as the call number, accession number, book number, etc. The computer database has all the specific information in the book. All of the data about specific library visitors is likewise kept in the computer database. Each customer receives a registered RFID card. Each customer's address, roll number, phone number, and other related information are stored on these cards, along with identity information. For each mobile user, the book database will be supplied to the application in a similar way, allowing him to locate and check whether the book is still available

in the library.

Results

A special system to be used in libraries to manage the books automatically and effectively is an RFID-based library management system. To efficiently identify and manage the books, it will make use of the RFID reader. The main advantages of this project in libraries include time savings, quick access to books, and the elimination of manual errors. The website allows users to view private transactions. The interface designed for the librarian can be used to handle the data. As a result, management and automation have both been put into place. Tag book mapping for students and books is shown in Table 2 and Table 3, respectively.

Table 2: RFID Tag Mapping for Books

Unique tag ID	RESULT
48009B0AD20B	NEW GENERAL MATH MUTIU
4500458F3BB4	CONTROL ENGINEERING DR ALAWODE
4500457E443A	A&B ENGLISH BASHIRU
48009CFC6D45	THEOLOGY IN HUMAN ADEWALE JOHN
46002141CCEA	A IN ENGLISH DELE OGUNDIPE

Table 3: RFID Tag Mapping for Students

INDIVIDUAL STUDENT ID	RESULT
48009AE33203	AKINTUNDE ELECTRICAL 500L
49005713F0FD	YUSUF ELECTRICAL 500L
1100202FC6DA	AKANJI CIVIL ENGINEERING 500L
48009AFO4765	JOSHUA GEOLOGY 400L
48009A7BEB42	AHMED URP 500L

Packaging

A 5 cm adaptable box was used to package the system. On a PCB board, the circuit design is completed. In order for the sound to be audible, the buzzer was fastened inside the box and slightly perforated. Below is the picture of the casing and the components shown in figure 5.

Figure 5: RFID Library Management System

Conclusion and Recommendation

Conclusion

In terms of library security, RFID technology is not only more advanced but also more practical, convenient, and affordable. In library materials, this technology is gradually taking the place of the conventional bar code. The use of RFID in libraries speeds up the processes for borrowing, monitoring, and searching books, freeing up personnel to focus on providing better user service. RFID tags and readers must be of high quality to produce optimum performance. The information that needs to be written in tags is another factor in how effectively technology is used. These programs can improve customer service, reduce book theft, reduce labor expenses significantly, and continuously update records of new book collections.

Recommendation

Every inventive technical design has its limits. This passive RFID-based library management system has some limitations as a technology for precise data collection. As a result, the following crucial suggestion should be taken into account in order to address this design's limitations in the future:

- The RFID reader can be improved so that it has finger and thumb print access, which is needed to access student data and details.
- By including a facial recognition application, which would further strengthen the biometric security of the system and protect it from impersonation by careless students.

References

Ayre, L. (2006c). RFID *backgrounder for library workers*. Retrieved June 11, 2008, from the Galecia Group: http://galecia.com/included/docs/rfid_backgrounder.pdf.

Ayre, L. B. (2006). "RFID Background for Library Workers." Retrieved from www.galecia.com/included/docs/rfid_backgrounder.pdf (accessed on 10 June 2015

Boss, R. (2009). RFID *technology for libraries*. Retrieved December 8, 2009 from http://www.lita.org/ala/mgrps/divs/pla/plapublications/platechnotes/rfid2009.pdf

Butters, A. (2006**).** Radio Frequency Identification: An Introduction for Library Professionals. *Australasian Public Libraries and Information Services***,** 19(4), 164–174.

Chan, P.-Y., & Ying, Z. (2005). "Application of RFID Technology with the Establishment of Book Drop in Library." *Bulletin of Library and Information Science*, Vol. 55, No. 6, pp. 101–8.

Curran, K., & Porter, M. (2007). A primer on radio frequency identification for libraries. *Library Hi Tech***,** 25(4), 595-611.

Golding, P., & Tennant, V. (2008). "Evaluation of a Radio Frequency Identification (RFID) Library System: Preliminary Results." *International Journal of Multimedia and Ubiquitous Engineering*, Vol. 3, No. 1, pp. 1–18.

Haley, C., Jacobsen, L., & Robkin, S. (2007). *Radio frequency identification handbook for librarians.* Westport, CT: Libraries Unlimited.

Molnar, D., & Wagner, D. (2004). "Privacy and security in library RFID: Issues, practices, and architectures." In Proceedings of the 11th ACM Conference on Computer and Communications Security (pp. 210-219). Washington: ACM Press.

Moses, K. (2018). Designing a Library Management System. _The International Journal of Multi-Disciplinary Research_, Conference ID: CFP/685/2018, ISSN: 3471-7102, ISBN: 978-9982-70-318-5.

Pawar, P., Shegaonkar, K., & Udane, A. (2016). Radio Frequency Identification Based Library Management System. In *_Proceedings of the National Conference on Innovative Trends in Engineering & Technology__* (Paper ID: NITETE&TC03). Solapur: A.G.P.I.T. (Published by Novateur Publications).

Potdar, V., Wu, C., & Chang, E. (2010). Automated data capture technologies: RFID. In J. Symonds (Ed.), *Ubiquitous and pervasive computing: Concepts, methodologies, tools, and applications* (pp. 82-111). Hershey, PA: IGI-Global.

Ramanathan, R., Ramanathan, U., Wan, L., & Ko, L. (2014). Adoption of RFID technologies in UK Logistics: Moderating roles of size, barcode experience, and government support. *Expert Systems with Applications*, 41(1), 230-236. Retrieved from http://doi.org/10.1016/j.eswa.2013.07.024.

Roy, P., & Kumar, S. (2016). Application of RFID in Shaheed Rajguru College of Applied Sciences for Women library, University of Delhi, India: Challenges and future prospects.

Qualitative and Quantitative Methods in Libraries, 5(1), 117-130.

V Tirupathi Rao. (November 2014). Emerging Initiatives in Library Management Systems. *International Journal of Emerging Technology in Computer Science & Electronics* (IJETCSE), 11(2), ISSN 0976-1353.

Ward, D. M. (2007). The complete RFID handbook. New York: Neal-Schuman Singh, J., Brar, N., & Fong, C. (2006). *The state of RFID applications in libraries. Information Technology and Libraries*, 25(1), 24-32.

Yu, S. (2007). RFID implementation and benefits in libraries. *The Electronic Library***,** 25(1), 54-64.

View publication stats