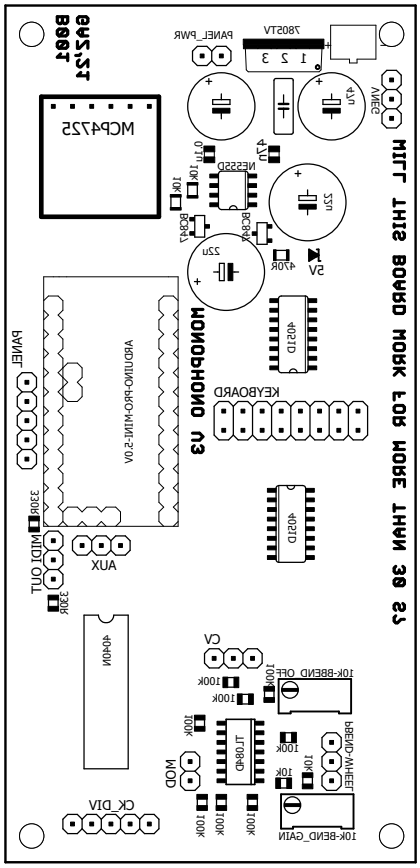
MILT SIHT SIHT DRAOB MORK LOR MORE THAN 30 S2
MONOPHONO V3
KEYBOARD
4051D
4051D
ARDUINO-PRO-MINI-5.0V
PANEL
AUX
MIDI OUT
330R
330R
4040N
CV
100K
100K
10K-BEND_OFF
TL084D
MOD
10K
10K
10K
10K
10K
10K
10K
10K
10K-BEND_GAIN
PEDAL-WHEEL
CK_DIV
MCP4725
NE555D
0.1u
10K
BC847
BC847
22u
22u
4u7
4u7
470R
5V
7805TV
1 2 3
PANEL_PWR
9V
GND
T2V
BOOB