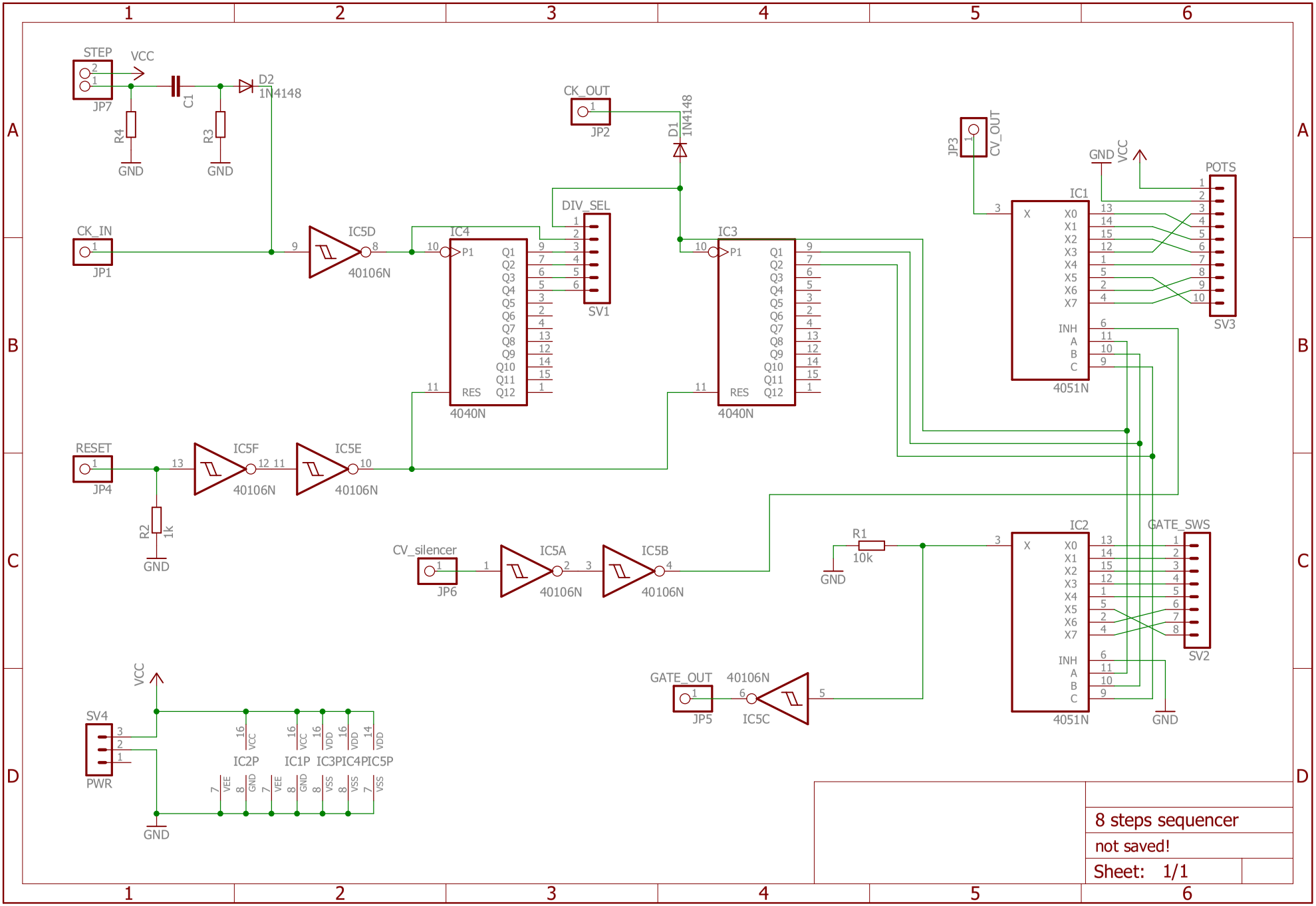
STEP
VCC
JP7
C1
D2
1N4148
R4
R3
GND
GND
CK_OUT
JP2
D1
1N4148
JP3
CV_OUT
GND
VCC
POTS
SV3
CK_IN
JP1
IC5D
40106N
IC4
4040N
DIV_SEL
SV1
IC3
4040N
IC1
4051N
RESET
JP4
IC5F
40106N
IC5E
40106N
R2
1k
GND
CV_silencer
JP6
IC5A
40106N
IC5B
40106N
R1
10k
GND
IC2
4051N
GATE_SWS
SV2
GND
GATE_OUT
JP5
40106N
IC5C
VCC
SV4
PWR
GND
IC2P
IC1P
IC3P
IC4P
IC5P
8 steps sequencer
not saved!
Sheet: 1/1