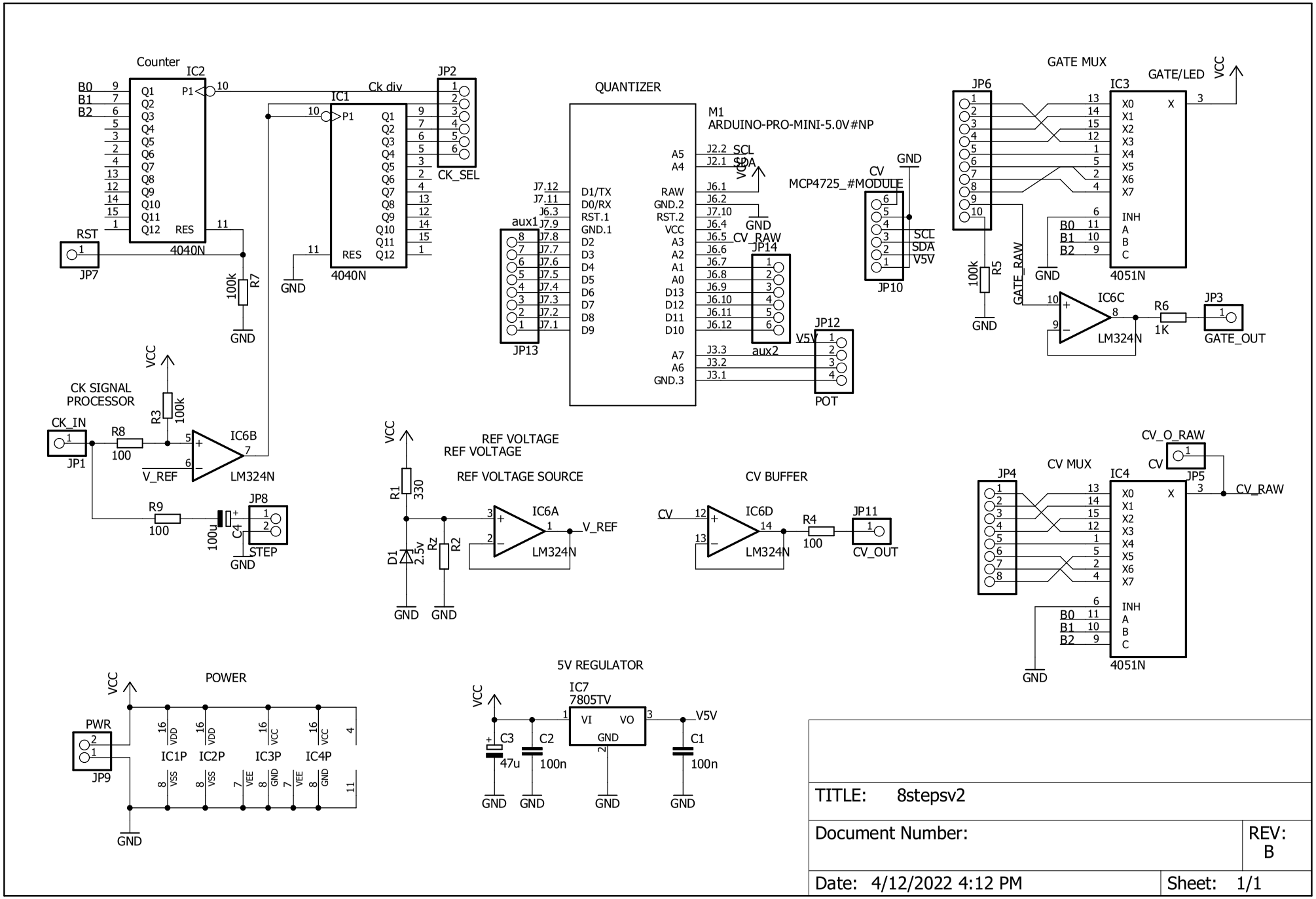
Counter
IC2
4040N
B0
B1
B2
RST
JP7
100k
R7
GND
Ck div
IC1
4040N
JP2
CK_SEL
QUANTIZER
M1
ARDUINO-PRO-MINI-5.0V#NP
D1/TX
D0/RX
RST.1
GND.1
D2
D3
D4
D5
D6
D7
D8
D9
RAW
GND.2
RST.2
VCC
A3
A2
A1
A0
D13
D12
D11
D10
A7
A6
GND.3
A5
A4
J2.2 SCL
J2.1 SDA
J6.1
J6.2
J7.10
J6.4
J6.5 CV_RAW
J6.6
J6.7
J6.8
J6.9
J6.10
J6.11
J6.12
J3.3
J3.2
J3.1
aux1
JP13
JP14
aux2
JP12
V5V
POT
CV
MCP4725_#MODULE
JP10
SCL
SDA
V5V
GATE MUX
JP6
IC3
GATE/LED
4051N
INH
GATE_RAW
R5
IC6C
LM324N
R6
1K
JP3
GATE_OUT
CK SIGNAL
PROCESSOR
CK_IN
JP1
R8
100
R3
100k
IC6B
LM324N
V_REF
R9
100
100u
C4
JP8
STEP
REF VOLTAGE
REF VOLTAGE
REF VOLTAGE SOURCE
R1
330
D1
2.5v
Rz
R2
IC6A
LM324N
CV BUFFER
IC6D
LM324N
R4
100
JP11
CV_OUT
CV_O_RAW
CV MUX
JP4
IC4
JP5
CV_RAW
POWER
PWR
JP9
IC1P
IC2P
IC3P
IC4P
5V REGULATOR
IC7
7805TV
VI
VO
GND
C3
47u
C2
100n
C1
100n
TITLE: 8stepsv2
Document Number:
REV: B
Date: 4/12/2022 4:12 PM
Sheet: 1/1