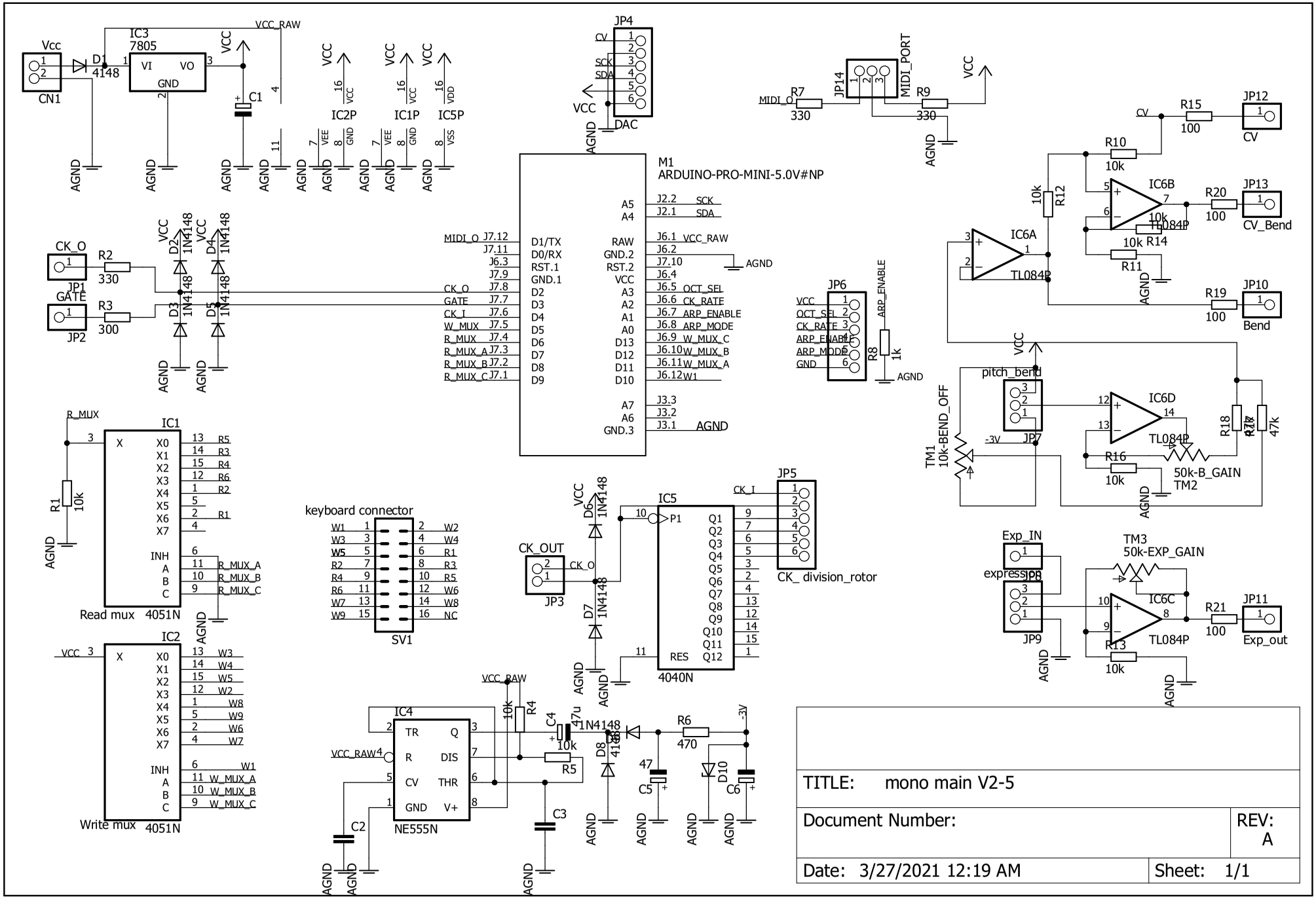
Vcc
CN1
D1
4148
IC3
7805
VI
VO
GND
VCC_RAW
VCC
C1
AGND
IC2P
IC1P
IC5P
VEE
GND
VDD
VSS
JP4
CV
SCK
SDA
DAC
M1
ARDUINO-PRO-MINI-5.0V#NP
D1/TX
D0/RX
RST.1
GND.1
D2
D3
D4
D5
D6
D7
D8
D9
A5
A4
RAW
GND.2
RST.2
VCC
A3
A2
A1
A0
D13
D12
D11
D10
A7
A6
GND.3
MIDI_O
CK_O
GATE
CK_I
W_MUX
R_MUX
R_MUX_A
R_MUX_B
R_MUX_C
SCK
SDA
VCC_RAW
OCT_SEL
CK_RATE
ARP_ENABLE
ARP_MODE
W_MUX_C
W_MUX_B
W_MUX_A
W1
JP14
MIDI_PORT
R7
330
R9
330
JP6
ARP_ENABLE
R8
1k
CK_O
R2
330
JP1
GATE
R3
300
JP2
D2
1N4148
D3
1N4148
D4
1N4148
D5
1N4148
R_MUX
IC1
R1
10k
Read mux 4051N
X0
X1
X2
X3
X4
X5
X6
X7
INH
A
B
C
R5
R3
R4
R6
R2
R1
R_MUX_A
R_MUX_B
R_MUX_C
IC2
VCC
Write mux 4051N
W3
W4
W5
W2
W8
W9
W6
W7
W1
W_MUX_A
W_MUX_B
W_MUX_C
keyboard connector
SV1
W1
W3
W5
R2
R4
R6
W7
W9
W2
W4
R1
R3
R5
W6
W8
NC
CK_OUT
JP3
D6
1N4148
D7
1N4148
IC5
P1
RES
4040N
Q1
Q2
Q3
Q4
Q5
Q6
Q7
Q8
Q9
Q10
Q11
Q12
JP5
CK_ division_rotor
IC4
NE555N
TR
R
CV
GND
Q
DIS
THR
V+
VCC_RAW4
R4
10k
C4
47u
R5
10k
C2
C3
D8
1N4148
R6
470
-3V
C5
47
D10
C6
IC6A
TL084P
IC6B
TL084P
IC6C
TL084P
IC6D
TL084P
R10
10k
R12
10k
R14
10k
R11
R15
100
JP12
CV
R20
100
JP13
CV_Bend
R19
100
JP10
Bend
pitch_bend
JP7
-3V
TM1
10k-BEND_OFF
R16
10k
R18
47k
50k-B_GAIN
TM2
Exp_IN
expressJP8
JP9
TM3
50k-EXP_GAIN
R13
10k
R21
100
JP11
Exp_out
TITLE: mono main V2-5
Document Number:
REV: A
Date: 3/27/2021 12:19 AM
Sheet: 1/1