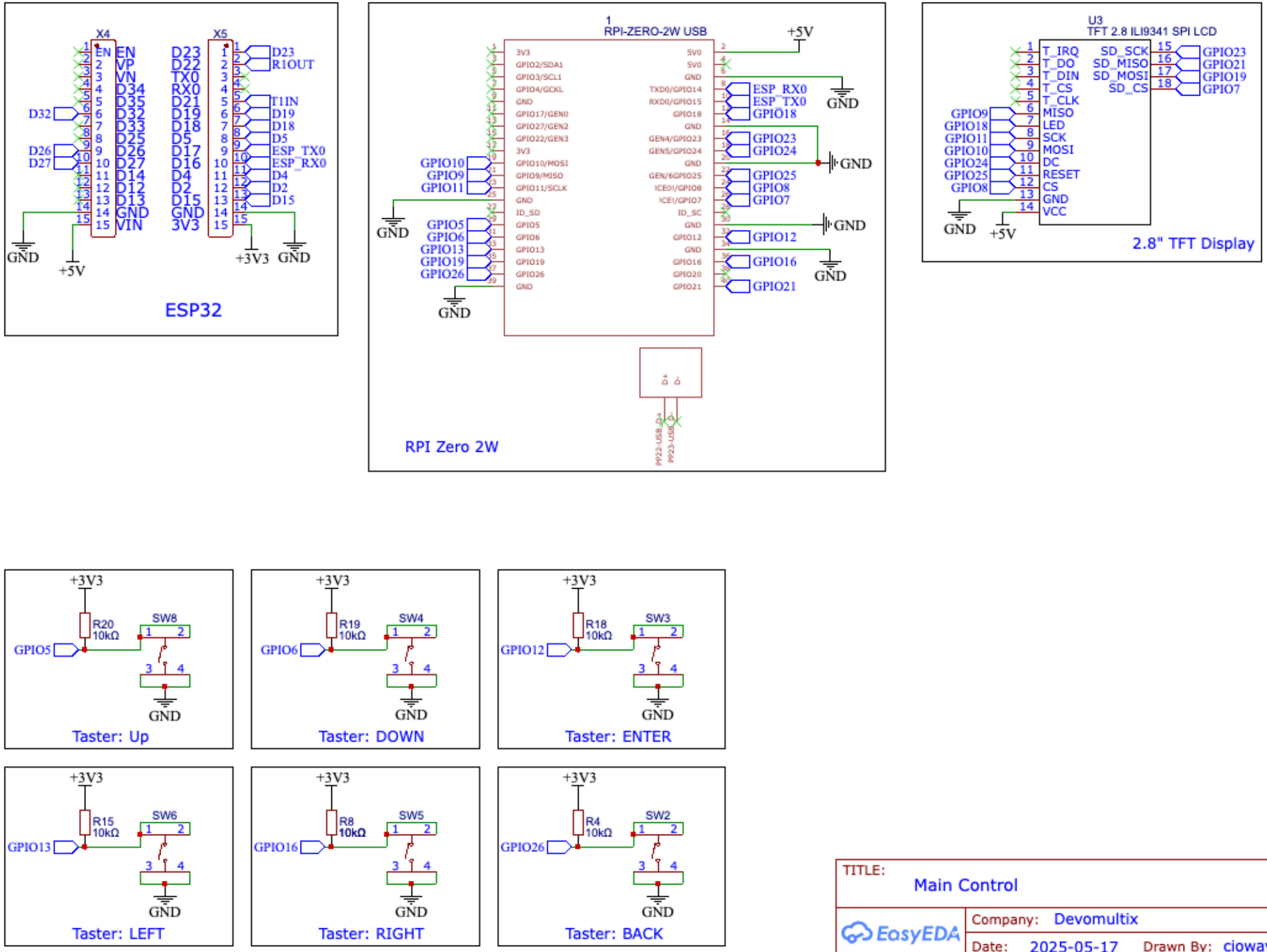
X4
X5
EN
VP
VN
D34
D35
D32
D33
D25
D26
D27
D14
D12
D13
GND
VIN
D23
D22
TX0
RX0
D21
D19
D18
D5
D17
D16
D4
D2
D15
GND
3V3
D23
R1OUT
T1IN
D19
D18
D5
ESP_TX0
ESP_RX0
D4
D2
D15
D32
D26
D27
GND
+5V
+3V3
ESP32
1
RPI-ZERO-2W USB
+5V
3V3
GPIO2/SDA1
GPIO3/SCL1
GPIO4/GCKL
GND
GPIO17/GEN0
GPIO27/GEN2
GPIO22/GEN3
3V3
GPIO10/MOSI
GPIO9/MISO
GPIO11/SCLK
GND
ID_SD
GPIO5
GPIO6
GPIO13
GPIO19
GPIO26
GND
5V0
5V0
GND
TXD0/GPIO14
RXD0/GPIO15
GPIO18
GND
GEN4/GPIO23
GEN5/GPIO24
GND
GEN6/GPIO25
ICE0/GPIO8
ICE1/GPIO7
ID_SC
GND
GPIO12
GND
GPIO16
GPIO20
GPIO21
ESP_RX0
ESP_TX0
GPIO18
GPIO23
GPIO24
GPIO25
GPIO8
GPIO7
GPIO12
GPIO16
GPIO21
GPIO10
GPIO9
GPIO11
GPIO5
GPIO6
GPIO13
GPIO19
GPIO26
GND
RPI Zero 2W
U3
TFT 2.8 ILI9341 SPI LCD
T_IRQ
T_DO
T_DIN
T_CS
T_CLK
MISO
LED
SCK
MOSI
DC
RESET
CS
GND
VCC
SD_SCK
SD_MISO
SD_MOSI
SD_CS
GPIO23
GPIO21
GPIO19
GPIO7
GPIO9
GPIO18
GPIO11
GPIO10
GPIO24
GPIO25
GPIO8
GND
+5V
2.8" TFT Display
+3V3
R20
10kΩ
SW8
GPIO5
GND
Taster: Up
R19
10kΩ
SW4
GPIO6
Taster: DOWN
R18
10kΩ
SW3
GPIO12
Taster: ENTER
R15
10kΩ
SW6
GPIO13
Taster: LEFT
R8
10kΩ
SW5
GPIO16
Taster: RIGHT
R4
10kΩ
SW2
GPIO26
Taster: BACK
TITLE:
Main Control
REV: 1.0
Company: Devomultix
Sheet: 1/1
Date: 2025-05-17
Drawn By: cioways
EasyEDA

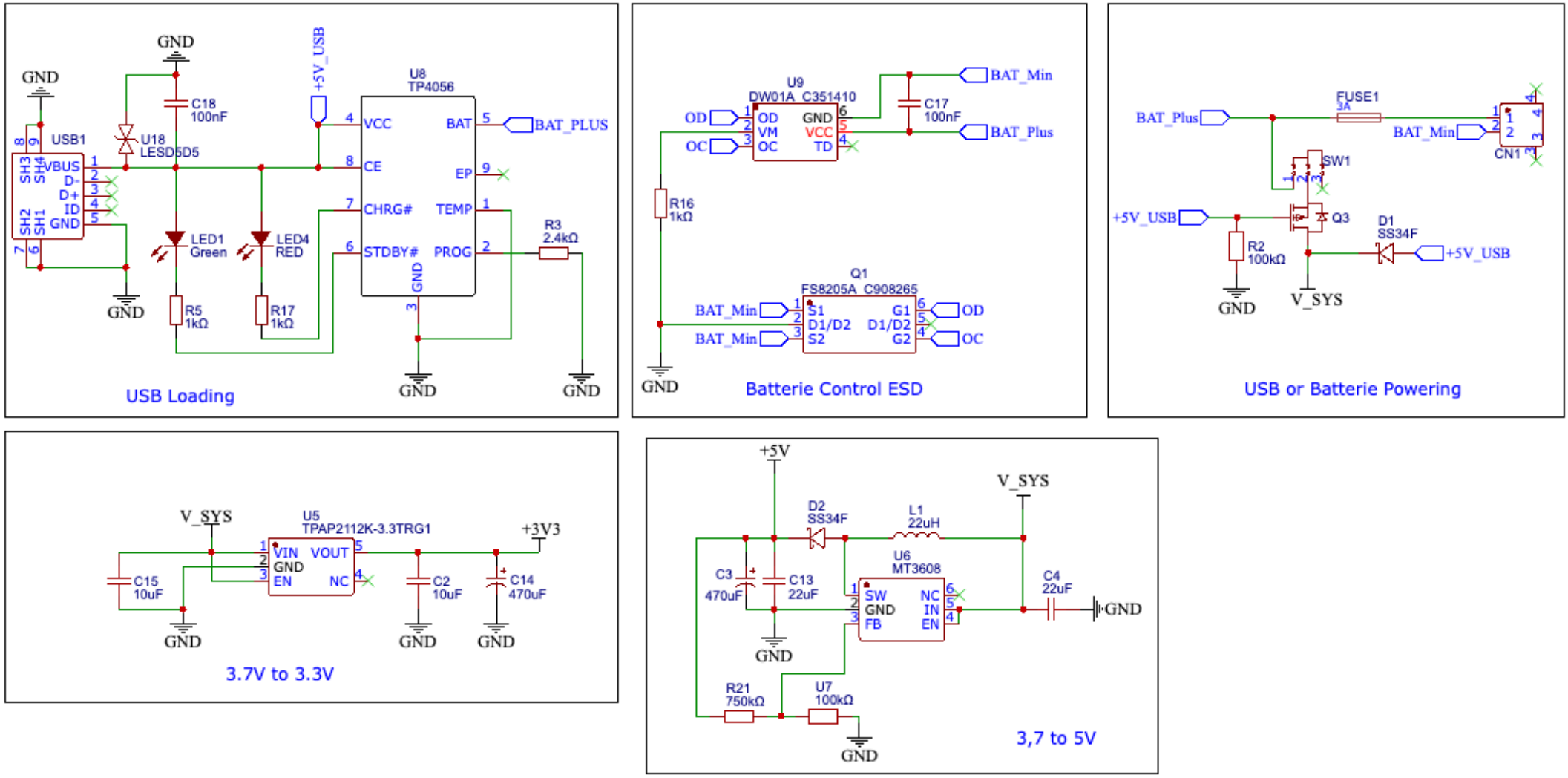

TITLE: Powering	REV: 1.0
EasyEDA	Company: DevoMultiX / Sheet: 1/1
	Date: 2025-06-07 / Drawn By: cioways

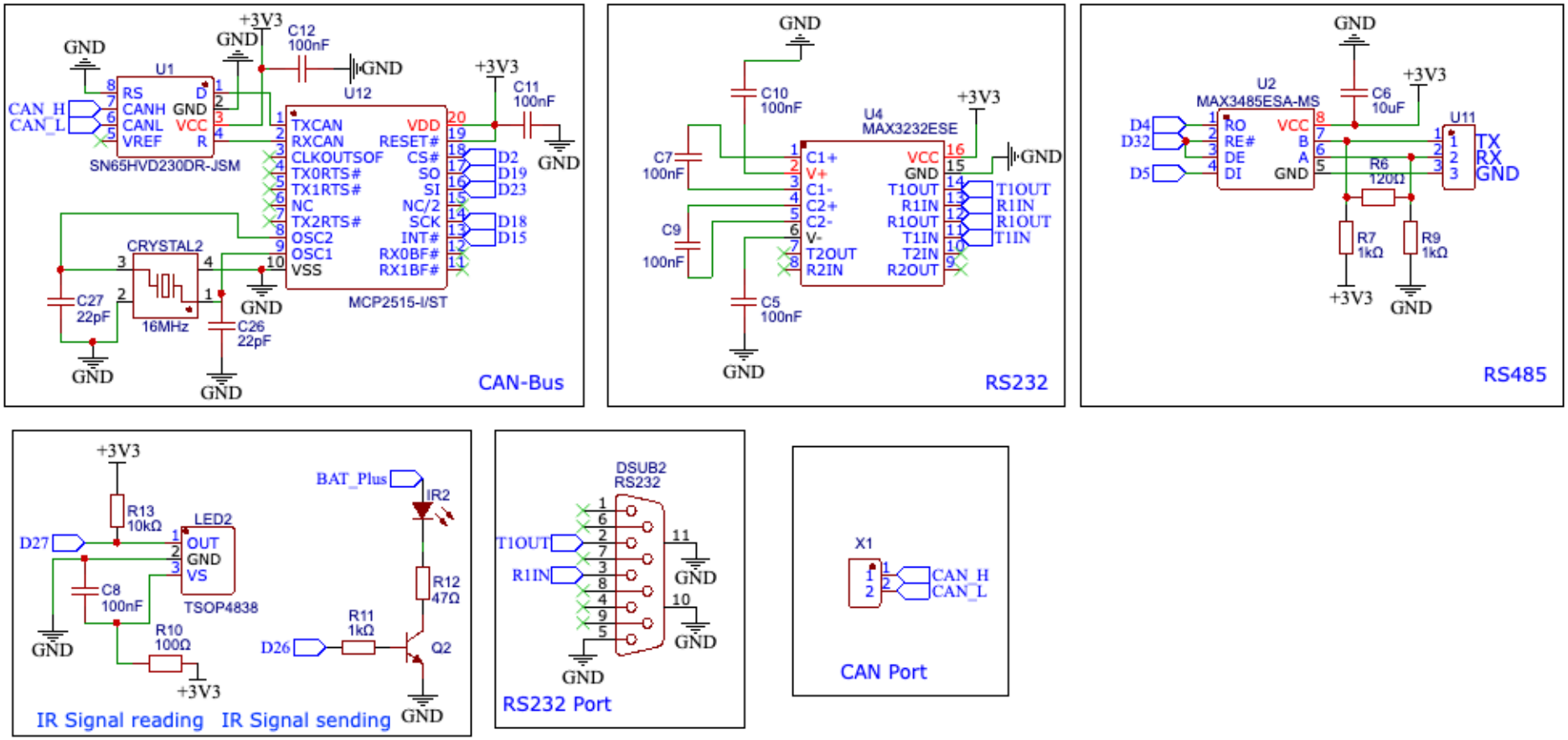

TITLE: Sheet_3	REV: 1.0
EasyEDA	Company: Your Company
	Sheet: 1/1
	Date: 2025-06-14 Drawn By: cioways