Abstract

With the rapid growth of digital communication, the secure transmission of sensitive data has become a critical necessity. While traditional cryptography protects data content, it often makes the presence of hidden information obvious to third parties. Steganography enhances security by concealing this secret information within digital media, such as images. However, existing methods like traditional Least Significant Bit (LSB) techniques often lack the necessary robustness and intelligent data placement. To address these limitations, this project proposes an AI-based secure image steganography system that leverages Deep Learning techniques. By incorporating these methods, the proposed system can intelligently select optimal embedding regions, significantly improving robustness compared to traditional LSB approaches. The core work involves developing a framework that embeds secret data inside a cover image while strictly preserving visual quality and minimizing detectability. The system implements comprehensive embedding and extraction mechanisms, and its performance is rigorously evaluated using standard image quality metrics, including PSNR, MSE, and SSIM. Ultimately, this project aims to design a secure, intelligent, and scalable steganography framework highly suitable for real-world digital communication.

List of Figures

Figure 1.1	Location Map & Header-Based Extraction	5
Figure 3.1	Existing system architecture	15
Figure 3.2	Proposed system architecture	18

List of Tables

Table 1.1	Features of Header-Based Extraction	6
Table 2.1	Summary of Reviewed Steganography techniques	14
Table 3.1	Core System Modules and Objectives	22
Table 3.2	Comparative Analysis of Sample Datasets	23
Table 3.3	Hardware and Software Specifications	24

Chapter 1
Introduction

1.1 Fundamentals

With the rapid growth of digital communication, the secure transmission of sensitive data has become a critical necessity across various domains. Traditionally, cryptography is employed to protect data by converting it into an unreadable ciphertext. While cryptography successfully protects the content of the data, it leaves behind a visible footprint, making the presence of hidden information obvious to malicious interceptors. Steganography addresses this vulnerability by concealing the very existence of the secret information within ordinary digital media, such as cover images. However, traditional techniques, such as standard Least Significant Bit (LSB) embedding, alter pixels indiscriminately. This often causes noticeable distortion in smooth regions of an image, making the hidden data susceptible to statistical detection.

To overcome these limitations, the 'GuardianPixel' system integrates Artificial Intelligence (AI) into the steganography pipeline. By utilizing Deep Learning techniques, the system intelligently identifies optimal embedding regions to minimize detectability. To achieve this, the project explores the following architectural path:

- **Location Map & Header-Based Extraction:** This asymmetric approach utilizes a Convolutional Neural Network (CNN) combined with Holistically-Nested Edge Detection (HED) exclusively on the sender side to identify high-entropy regions. The system generates a location map, embeds it as a header, and allows the receiver to extract the data efficiently without requiring AI overhead.
- This asymmetric framework represents a significant shift from traditional end-to-end deep learning models. While the sender leverages advanced computer vision to maximize security, the header-based extraction mechanism provides a deterministic and error-free pathway for data recovery. Consequently, GuardianPixel achieves a robust synchronization between sender and receiver without the need for sharing the original cover image or secondary metadata channels
- This adaptive embedding strategy significantly reduces the probability of detection by modern steganalysis tools (such as RS Analysis or Pixel-Value Differencing attacks), as the structural integrity of the image's smooth regions remains entirely untouched.
- By separating computational complexity to the sender side, GuardianPixel minimizes processing requirements at the receiver. This allows secure operation on resource-constrained devices without compromising advanced security features. The system integrates AES-256 GCM encryption and SHA-256 hashing to ensure strong data security and integrity. This combination enables efficient,

secure, and verifiable hidden communication.

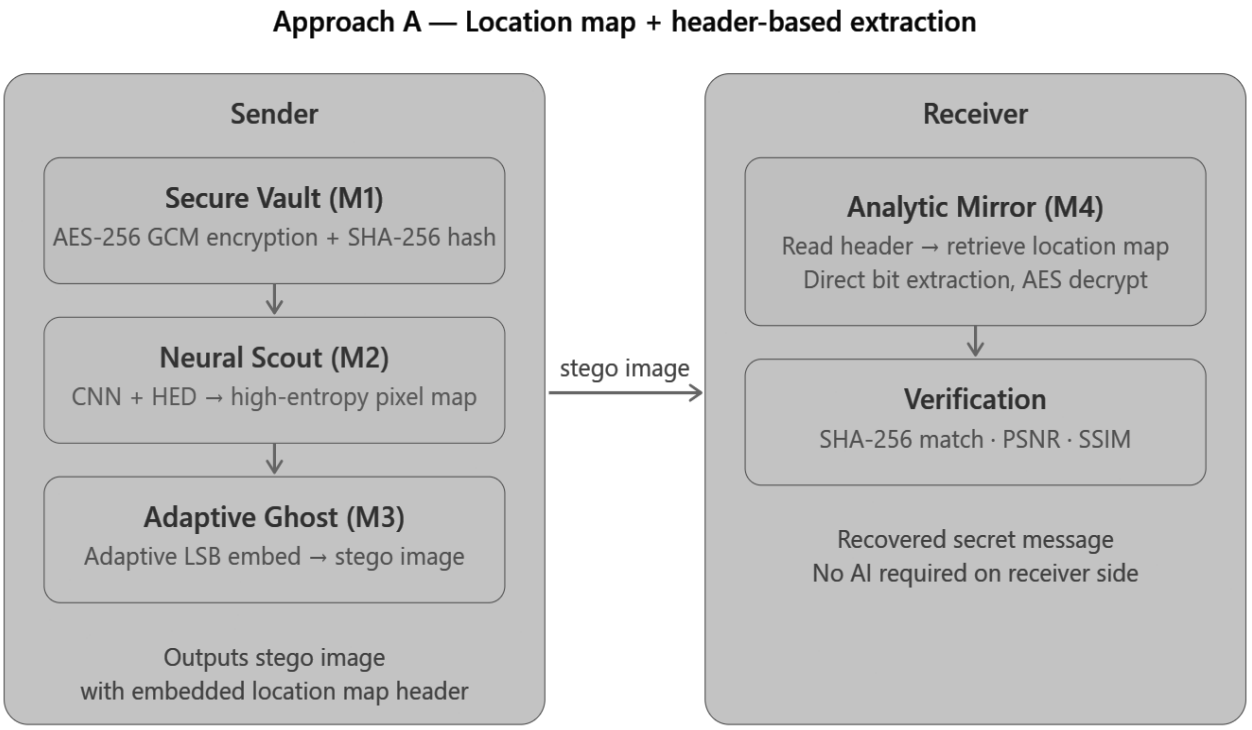

Fig 1.1: Location Map & Header-Based Extraction

Figure 1.1 shows the hybrid CNN + LSB pipeline — the key idea being that AI (Neural Scout) runs only on the sender side to build a location map, which gets embedded in a header. The receiver needs no AI at all it just reads the header and extracts directly.

1.2 Objectives

The objective of this work is to design a secure, intelligent, and scalable steganography framework suitable for real-world digital communication. The core objectives are as follows:

- To develop an AI-based secure image steganography system that leverages Deep Learning techniques (specifically CNN and HED) to intelligently select high-entropy embedding regions, improving robustness compared to traditional LSB approaches.
- To design an asymmetric architecture where the computationally heavy AI processing is restricted to the sender side, allowing for a lightweight and highly efficient receiver.
- To implement a header-based "location map" protocol that guarantees 100% lossless data retrieval without relying on secondary machine learning inference at the receiver's end .
- To integrate standard cryptographic techniques, specifically AES-256 GCM encryption and SHA-256 hashing, with steganography to ensure absolute data confidentiality and integrity.

- To evaluate the system's performance and imperceptibility using standard image quality and statistical metrics, including PSNR, MSE, and SSIM.

Table 1.1: Features of Header-Based Extraction

Feature	Header-Based Extraction
AI Utilization	Asymmetric (Sender side only)
Embedding Logic	CNN & HED generate a capacity map; data is hidden using Adaptive LSB.
Receiver Complexity	Low: Uses deterministic header reading; no AI processing required.
Security Mechanism	AES-256 GCM + SHA-256 Hashing.

Table 1.1 shows the features of the path mentioned above. This asymmetric framework restricts complex AI embedding to the sender, allowing for a lightweight and deterministic receiver. It combines Deep Learning with AES-256 GCM encryption.

1.3 Scope

The scope of this project pertains to the development of a secure digital communication framework integrating Deep Learning (specifically Convolutional Neural Networks and Holistically-Nested Edge Detection) with traditional Cryptographic and Steganographic techniques. The project encompasses the design of the embedding algorithms and the extraction mechanisms exclusively for a header-based, asymmetric pipeline. Furthermore, the scope includes the development of a User Interface layer consisting of a React frontend and a Flask backend to facilitate the uploading of cover images and the secure transmission of secret payloads.

1.4 Outline

The report is organized as follows: The introduction is given in Chapter 1. It describes the fundamental terms used in this project, motivates the integration of AI, and presents the outline of the objectives. Chapter 2 presents a comprehensive literature survey, describing the review of relevant existing steganography systems and their limitations. Chapter 3 details the Proposed System, including the input layers, security modules, the asymmetric CNN embedding architecture, and the evaluation metrics. The societal and technical applications, such as military communication and medical data security, are explored in Chapter 4. Finally, the summary of the report is presented in Chapter 5.

Chapter 2
Literature Survey

Image steganography has emerged as a critical research domain for secure data transmission, addressing the growing need for covert communication across public networks. This chapter presents a comprehensive review of existing literature on image steganography techniques, focusing on the fundamental challenges of balancing imperceptibility, capacity, robustness, and security. The literature survey encompasses traditional spatial-domain methods, frequency-domain approaches, edge detection-based techniques, and deep learning-based frameworks. Each technique is critically examined for its advantages and limitations, providing a foundation for understanding the research gaps that motivate this study.

2.1 Edge Detection-Based Steganography Techniques

Edge detection-based steganography methods leverage the human visual system's reduced sensitivity to modifications in high-frequency regions. These techniques exploit the fact that embedding secret data in edge areas characterized by sharp transitions in pixel intensity is less perceptible than embedding in smooth regions.

2.1.1 Hybrid Edge Detection with LSB

An enhanced LSB image steganography approach utilizing hybrid Canny-Sobel edge detection identifies edge regions in cover images using both Canny and Sobel operators, then embeds secret data specifically in these areas [1]. The embedding capacity is increased to 3.3 bits per pixel (BPP) while maintaining a PSNR of approximately 33 dB. The study demonstrates that edge-based embedding achieves better imperceptibility compared to uniform embedding across the entire image.

Advantages:

- Improved imperceptibility by targeting visually complex regions
- Higher embedding capacity (3.3 BPP) compared to conventional LSB methods
- Effective utilization of both Canny and Sobel operators for edge detection

Disadvantages:

- Limited robustness against steganalysis attacks
- No evaluation of security against modern steganalysis tools

- Performance dependent on threshold parameters of edge detectors

2.1.2 Deep Learning-Based Edge Detection

A deep learning-based steganography method employs a CNN with deep supervision-based edge detection, which identifies more edge pixels than conventional algorithms by masking the last 5 bits of each pixel value and calculating edge maps using global and adaptive thresholding [2]. The embedding rule allocates more secret bits to edge pixels and fewer bits to non-edge pixels.

Advantages:

- Superior edge detection capability through deep supervision
- Adaptive embedding based on edge significance
- Higher payload capacity compared to conventional edge detectors

Disadvantages:

- Increased computational complexity due to deep learning
- Requires extensive training data
- Potential overfitting to specific image types

2.2 Deep Learning-Based Steganography Techniques

Deep learning approaches have revolutionized image steganography by enabling end-to-end learning of embedding and extraction processes. These methods utilize convolutional neural networks (CNNs), generative adversarial networks (GANs), and autoencoders to achieve superior performance across multiple metrics.

2.2.1 CNN Autoencoder Networks

A general image steganography system based on autoencoding network architecture comprises two sub-networks: a hiding network for encoding secret images and an extraction network for retrieving secret data from stego images trained end-to-end using deep convolutional neural networks [3]. Experiments were conducted on challenging datasets including ImageNet, CIFAR10, LFW, and PASCAL-VOC12.

Advantages:

- Generic architecture applicable to diverse image types
- Simultaneous optimization of embedding and extraction

- Acceptable PSNR and SSIM values across datasets

Disadvantages:

- Limited robustness against image processing attacks
- No security evaluation against steganalysis tools
- High training complexity

2.2.2 CNN Encoder-Decoder with Edge Detection

A robust image steganography framework integrating edge detection (Canny or Sobel) with CNN-based embedding and extraction identifies edge regions in cover images, then embeds secret data within these regions using a CNN model [4]. The approach achieves high imperceptibility with PSNR up to 39.85 dB and SSIM up to 0.997 when using Sobel, with a capacity of 8 BPP. Robustness is validated against JPEG compression, Gaussian noise, salt-and-pepper, speckle, and filtering attacks, with PSNR values up to 76.2 dB under compression attacks. Security testing using Xu-Net and Ye-Net steganalyzers shows detection accuracy between 0.45 and 0.67.

Advantages:

- High capacity of 8 BPP while maintaining imperceptibility
- Comprehensive robustness evaluation against multiple attack types
- Strong resistance to steganalysis detection
- Systematic evaluation of three diverse datasets (Tiny ImageNet, Bossbase, USC-SIPI)

Disadvantages:

- High dependence on conventional edge detection algorithms
- Limited performance on images with ambiguous or faint edges
- Inability to handle variations in image complexity adaptively
- CNN performance inferior to newer architectures like GANs and Transformers

2.2.3 SRIS-Net: Multi-Domain Feature Approach

The Secure and Robust Image Steganography Network (SRIS-Net) addresses the limitations of single-domain feature extraction by combining spatial and frequency-domain features [5]. The method utilizes Laplacian Pyramid Frequency-Domain Decomposition (LPFDD) to decompose spatial features into multiple frequency sub-bands, implementing progressive embedding across these bands. Key innovations include the Global-Local Embedding Module (GLEM) for adaptive embedding considering

both global structure and local details, and the Dual Multi-Scale Aggregation Sub-Network (DMSubNet) for multi-scale reconstruction. A dual-task discriminator generates feature score maps of regions of interest to guide embedding.

Advantages:

- Superior imperceptibility with PSNR of 43.55 dB and SSIM of 0.9990
- High undetectability with error detection rate of 36% against XuNet
- Strong robustness across multiple attack types (mean filtering, Gaussian filtering, sharpening)
- Maximum payload of approximately 72-96 BPP

Disadvantages:

- Complex architecture requiring substantial computational resources
- Performance degradation under combined noise conditions
- Limited evaluation on grayscale images only
- High training complexity with 160 epochs on A100 GPU

2.3 LSB-Based Steganography Techniques

Least Significant Bit (LSB) substitution remains one of the most widely studied steganography techniques due to its simplicity and high embedding capacity. Various enhancements have been proposed to improve security and imperceptibility.

2.3.1 Conventional LSB with Encryption

A steganography scheme combining LSB with AES and Blowfish encryption introduces randomness in pixel selection and uses masks as encryption keys for hiding text in images [6]. Frame-based data hiding is employed, where images are split into multiple frames with disrupted sequential order. The approach achieves PSNR of 85.1 dB and MSE of 0.00018717.

Advantages:

- High imperceptibility with excellent PSNR values
- Enhanced security through encryption integration
- Random pixel selection improves resistance to detection

Disadvantages:

- Limited to text data hiding

- No robustness evaluation against attacks
- Complexity of key management

2.3.2 Dual-Image LSB with Randomization

Reversible LSB steganography addressing security vulnerabilities in conventional approaches creates three copies of the cover image, replaces all LSBs with truly random bits, and uses a hashed-stegokey to determine embedding locations [7]. The XOR operation combines LSBs of three images to produce the final stego image. Key adherence to Kerckhoff's principle ensures security even under known-cover attacks.

Advantages:

- Adherence to Kerckhoff's principle with undetectability requirement
- Resistance to known-cover attacks through stegokey dependence
- Random bit insertion prevents determination of hidden message length
- Different outputs for same cover image and message due to randomness
- High PSNR values (51.13–51.17 dB) across multiple test images

Disadvantages:

- Triple image generation increases storage requirements
- Dependency on SHA-256 for key generation
- No evaluation against deep learning-based steganalysis
- Limited to grayscale images

2.4 Spread Spectrum Steganography Techniques

Spread Spectrum Image Steganography (SSIS) embeds secret data by spreading it across a wide frequency band, providing inherent robustness against noise and interference.

2.4.1 Traditional SSIS with PN Sequences

The foundational SSIS framework employs a pseudo-noise (PN) sequence as a secret key for embedding and extracting messages, adding a PN sequence modulated by the secret bit to the cover image [8]. Reconstruction uses correlation detection to recover the embedded bit. This approach achieves robustness against various distortions but relies entirely on secret key security.

Advantages:

- Inherent robustness against noise and signal processing attacks
- Blind extraction without requiring original cover image
- Well-established theoretical foundation

Disadvantages:

- Vulnerability to geometric attacks (rotation, translation)
- Security dependent on PN sequence secrecy
- Limited embedding capacity
- Susceptible to known-cover attacks if algorithm is known

2.4.2 Expanded and Advanced SSIS

An advanced SSIS variant uses multiple PN sequences to increase capacity, with the key innovation being generation of PN sequences based on host image statistical characteristics to minimize correlation between PN and host image [9]. This reduces the effect of host image interference on extraction accuracy. Orthogonal PN sequences based on Hadamard matrices further improve performance by eliminating cross-correlation between different sequences.

Advantages:

- Increased capacity through multiple PN sequences
- Reduced host image interference through statistical adaptation
- Orthogonal sequences eliminate cross-correlation interference

Disadvantages:

- Complex PN generation requiring host image statistics
- Still vulnerable to geometric attacks
- Requires storage of multiple PN sequences

2.4.3 CNN-Based SSIS

A novel SSIS method eliminates reliance on PN sequences as secret keys by using structured PN-based patterns generated from sinusoidal waves with varying frequencies, forming distinct classes, where secret data corresponds to class indices rather than specific PN sequences [10]. A CNN model classifies extracted patterns, replacing traditional correlation detectors. The method operates in the Fourier domain, preserving low-frequency components while embedding patterns in high-frequency regions.

Advantages:

- Enhanced security by eliminating PN sequence dependency
- Superior transparency with PSNR of 44.5 dB and LPIPS of 0.002
- Robustness against geometric attacks (up to 40-pixel shift, 5° rotation)
- Scalability to larger images through patch-based processing
- Competitive robustness against conventional SS methods

Disadvantages:

- Requires CNN training for pattern classification
- Performance limited by mask ratio selection
- Vulnerable to JPEG compression affecting high frequencies
- Limited evaluation on four classes (2 bits capacity)

2.5 Adaptive Framework Approaches

Adaptive frameworks dynamically select algorithms based on image characteristics to optimize performance across multiple metrics.

2.5.1 Entropy-Based Adaptive Framework

The Mimic Octopus Adaptive Framework (MOAF) adaptively selects compression and encryption algorithms based on Shannon entropy of secret images applying Vector Quantization compression with 3DES encryption for images with entropy below 5, and Huffman Coding with AES encryption for entropy ≥5 [11]. A SHA-256 key generator incorporates image features and nonce values. The framework achieves PSNR of 81.31 dB and SSIM of 1.0 at a payload capacity of 79,747 bytes.

Advantages:

- Adaptive selection optimizes performance for different image types
- Excellent imperceptibility with high PSNR and SSIM
- Comprehensive key generation using image features
- Robustness against Gaussian noise and cropping attacks

Disadvantages:

- Limited to two encryption algorithms (3DES, AES)
- No evaluation against deep learning-based steganalysis

- Processing time of 3.52 seconds may not suit real-time applications
- Restricted to medical ultrasound images

2.6 Literature Summary

The five research papers reviewed in this chapter present diverse approaches to image steganography, each addressing different aspects of the core challenges: imperceptibility, capacity, robustness, and security.

Table 2.1: Summary of Reviewed Steganography Techniques

SN	Paper	Key Findings	Limitations
1.	Al-Rawashdeh et al. [1]	High capacity, strong robustness, resistance to steganalysis	Dependence on conventional edge detectors, limited to three datasets
2.	Xiao et al. [2]	PSNR 43.55 dB, SSIM 0.999, 96 BPP capacity, high undetectability	Complex architecture, high training requirements
3.	Rafat and Sajjad [3]	PSNR > 51 dB, resistance to known-cover attacks, adherence to Kerckhoff	Triple storage requirement, grayscale only
4.	Tafreshi et al. [4]	PSNR 44.5 dB, geometric robustness, enhanced security	CNN training required, JPEG compression vulnerability
5.	Judy and Khilar [5]	PSNR 81.31 dB, SSIM 1.0, adaptive selection	Limited algorithms, medical images only

Chapter 3

Methodology

3.1 Overview

This section details the GuardianPixel architecture, an asymmetric framework that optimizes security and performance. It contrasts a heavy, AI-driven sender process utilizing CNN and HED for intelligent embedding with a lightweight, deterministic receiver. By merging AES-256 GCM encryption with adaptive steganography, the system ensures high imperceptibility and mathematically verifiable data integrity.

Existing System Architecture

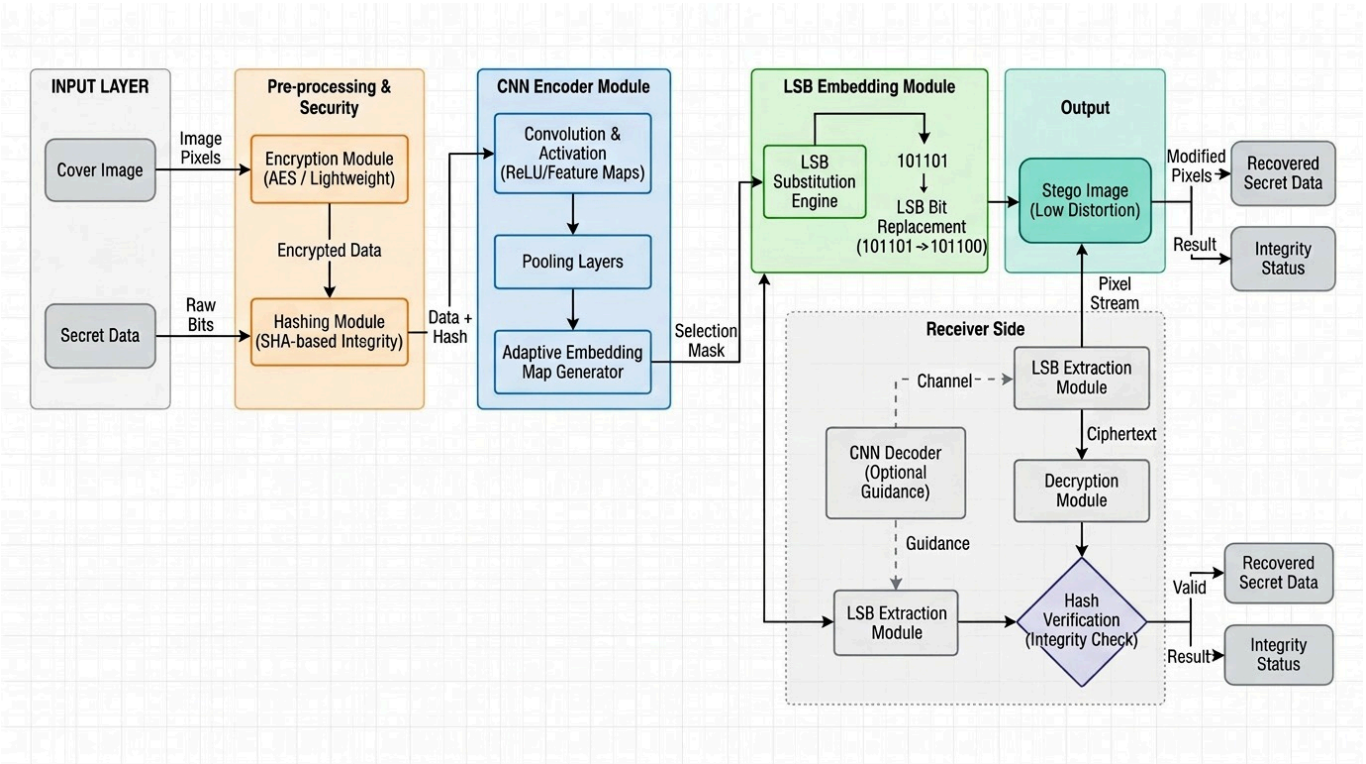

Fig. 3.1 Existing system architecture

1. Introduction

The proposed system integrates Deep Learning (CNN) with traditional Cryptographic and Steganographic techniques to provide a robust, imperceptible, and secure method for data concealment. By utilizing a Convolutional Neural Network (CNN) to identify optimal embedding regions, the system minimizes perceptual distortion while ensuring data integrity.

2. Input Layer

The pipeline begins with two distinct data streams:

- Cover Image: The carrier medium (e.g., JPEG, PNG) used to host the hidden data.

- Secret Data: The raw payload (text, binary, or files) intended for secure transmission.

3. Pre-processing & Security Module

Before embedding, the secret data undergoes a dual-stage security preparation:

3.1 Encryption Module (AES / Lightweight)

To ensure confidentiality, the raw data is encrypted using Advanced Encryption Standard (AES) or a lightweight cipher. This ensures that even if the presence of hidden data is detected (steganalysis), the content remains inaccessible without the decryption key.

3.2 Hashing Module (SHA-based Integrity)

A Secure Hash Algorithm (SHA) is applied to the secret data to generate a unique digital fingerprint. This hash is appended to the encrypted payload, allowing the receiver to verify that the data has not been tampered with or corrupted during transit.

4. CNN Encoder Module

The CNN acts as the "intelligence" layer, analyzing the cover image to optimize the embedding process.

4.1 Convolution & Activation

- Feature Extraction: Convolutional filters identify edges, textures, and patterns.
- Non-linearity: The ReLU (Rectified Linear Unit) activation function helps the network distinguish between complex visual regions and smooth surfaces.

4.2 Pooling Layers

Pooling reduces spatial dimensions, focusing on high-level features. This allows the network to prioritize "noisy" or highly textured areas of the image, which can absorb pixel modifications more effectively than flat areas.

4.3 Adaptive Embedding Map Generator

The output of the CNN is a Selection Mask. This mask dictates the specific pixel coordinates where data should be embedded to maintain maximum visual fidelity.

5. LSB Embedding Module

The system utilizes Least Significant Bit (LSB) substitution, the gold standard for minimal-impact pixel modification.

- LSB Substitution Engine: Maps the encrypted payload to the pixels identified by the CNN

Selection Mask.

- Bit Replacement: Modifies the LSB of selected pixels (e.g., changing a value from 200 to 201). Because the change is limited to the 2^0 bit, the change in color intensity is imperceptible.

6. Output — Stego Image

The resulting Stego Image is visually indistinguishable from the original cover image. It is then transmitted through a communication channel.

7. Receiver Side (Decoder Pipeline)

Upon receipt, the system performs the inverse operations to retrieve the payload:

1. LSB Extraction: The pixel stream is processed to extract the modified LSBs from the specified coordinates.
2. CNN Decoder (Optional): In blind steganography scenarios, a secondary CNN can help identify the embedding locations if the mask was not shared.
3. Decryption: The extracted ciphertext is decrypted using the shared cryptographic key.
4. Hash Verification: The system re-calculates the SHA hash of the recovered data and compares it to the embedded hash.

8. Verification & Reconstruction

The final stage of the pipeline ensures the total recovery of the original message. Once the hash is verified and the data decrypted, the system reconstructs the secret file into its original format. If the calculated hash matches the embedded hash, the system confirms a Lossless Recovery, guaranteeing that the AI-driven selection and LSB modification did not result in a single bit of data loss.

9. Conclusion

By orchestrating a synergy between Deep Learning (for spatial intelligence), Cryptography (for content security), and Steganography (for existence concealment), the GuardianPixel system establishes a "Defense-in-Depth" posture. This multi-layered approach ensures that the hidden information is not only difficult to see and detect but remains mathematically secure even in the event of an intercept, providing a comprehensive solution for modern secure digital communication.

Furthermore, the layered design enhances resilience against both statistical steganalysis and brute-force cryptographic attacks. It also ensures scalability and adaptability, making the system suitable for diverse real-world applications ranging from secure messaging to sensitive data transmission in distributed environments.

Proposed System Architecture

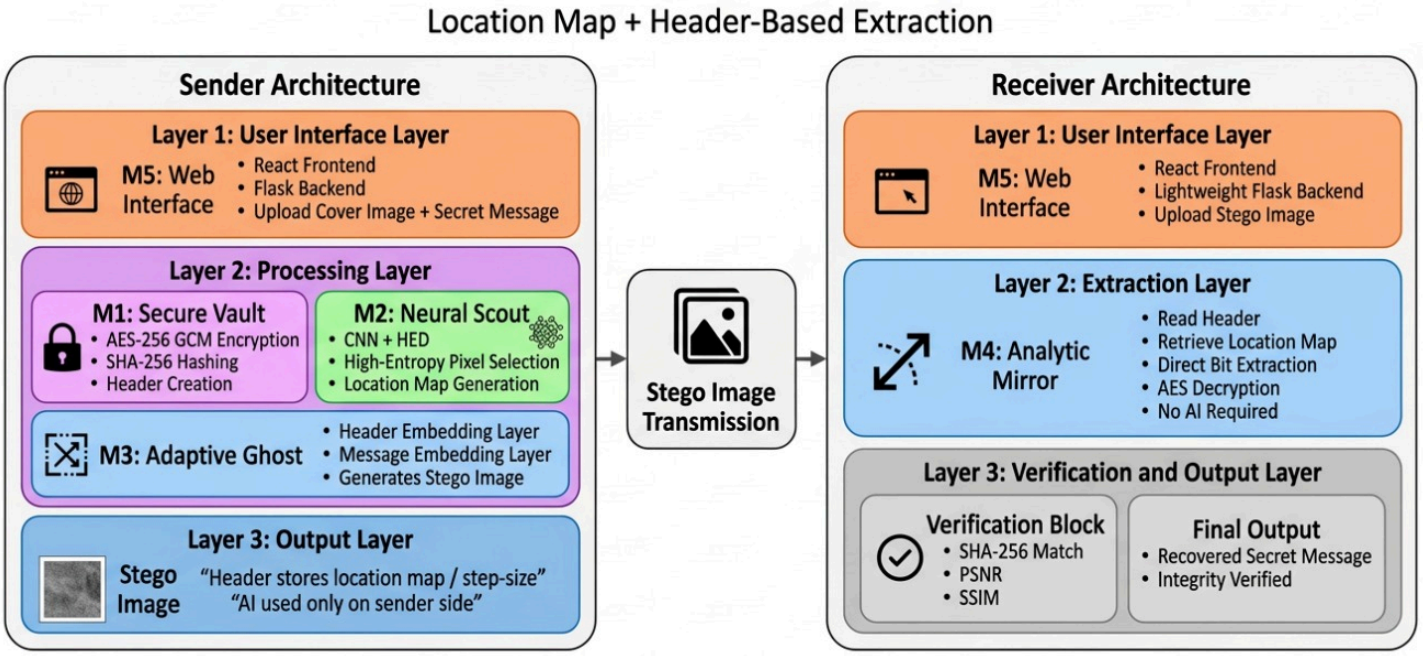

Fig. 3.2 Proposed system architecture

1. Sender Architecture (Embedding Process)

The sender side utilizes a multi-layered approach to secure and hide data within a cover image:

- Layer 1: User Interface (UI) Layer
  - M5 (Web Interface): A responsive frontend built with React and a backend powered by Flask.
  - Functionality: Facilitates the upload of the cover image and the input of the secret message to be hidden.
- Layer 2: Processing Layer
  - M1 (Secure Vault): Ensures data confidentiality and integrity using AES-256 GCM Encryption and SHA-256 Hashing. It also generates a metadata header for the extraction process.
  - M2 (Neural Scout): Employs CNN (Convolutional Neural Networks) and HED (Holistically-Nested Edge Detection) to analyze image texture.
  - Pixel Selection: Identifies high-entropy regions to generate a Location Map, ensuring data is hidden in areas where changes are least visible to the human eye.
  - M3 (Adaptive Ghost): The core embedding engine that integrates the header and the encrypted message into the cover image to produce the final Stego Image.
- Layer 3: Output Layer

    - Produces the finalized Stego Image containing the embedded data.
    - Optimization: AI processing is heavy on the sender side to ensure the Stego image is robust and imperceptible.

2. Receiver Architecture (Extraction Process)

The receiver side is designed for efficiency and does not require AI overhead to recover the message:

- Layer 1: User Interface Layer
    - M5 (Web Interface): A lightweight React and Flask interface for uploading the received Stego image.
- Layer 2: Extraction Layer
    - M4 (Analytic Mirror): Performs the reverse operations of the sender without needing a neural network.
    - Workflow: Reads the embedded header, retrieves the Location Map, performs direct bit extraction from specified coordinates, and applies AES Decryption.
- Layer 3: Verification and Output Layer
    - Verification Block: Conducts integrity checks using SHA-256 Match.
    - Quality Metrics: Evaluates image quality and security using PSNR (Peak Signal-to-Noise Ratio) and SSIM (Structural Similarity Index).
    - Final Output: Delivers the recovered secret message and a confirmation of data integrity.

3. Key Technical Highlights

- Asymmetric Complexity: AI is utilized only on the sender side (Neural Scout) for intelligent pixel selection, allowing the receiver to remain lightweight and fast.
- Enhanced Security: Combines cryptographic standards (AES-256) with steganographic concealment.
- Adaptive Embedding: Uses high-entropy pixel selection to maintain high image fidelity, minimizing the risk of detection by steganalysis tools.

3.2 Requirements for Implementation

This section details the core technical methodologies that power the system's security and intelligence, ranging from cryptographic hardening to deep learning-driven spatial analysis. These techniques ensure that data is not only invisibly embedded within high-entropy image regions but is also mathematically protected against tampering and steganalysis.

3.2.1 Techniques

1. Data Security and Cryptography

Before the embedding process begins, the secret message is secured to ensure that even if the steganographic layer is breached, the content remains unreadable.

- AES-256 GCM (Advanced Encryption Standard):
  - Technique: An authenticated symmetric key cipher that provides both confidentiality and data integrity.
  - Application: The secret message is encrypted into ciphertext using a 256-bit key. The GCM (Galois/Counter Mode) adds an authentication tag to detect any tampering during transmission.
- SHA-256 Hashing:
  - Technique: A cryptographic hash function that produces a unique 256-bit signature for the original data.
  - Application: Used for the Verification Block to confirm that the extracted message at the receiver end is bit-for-bit identical to the original input.

2. AI-Driven Feature Extraction (Neural Scout)

This module uses deep learning to identify the best "hiding spots" in the cover image, prioritizing security over simple capacity.

- Holistically-Nested Edge Detection (HED):
  - Algorithm: A deep learning-based edge detection technique that uses multi-scale and multi-level feature learning.
  - Application: HED identifies complex textures and edges in the cover image. Since the human eye is less sensitive to changes in busy, high-frequency areas (edges), these are selected as optimal embedding zones.
- Convolutional Neural Networks (CNN):
  - Algorithm: Hierarchical feature extraction through multiple convolutional layers.
  - Application: Analyzes local pixel neighborhoods to calculate Entropy. High-entropy regions (areas with unpredictable pixel patterns) are used to generate a Location Map.

3. Adaptive Embedding (Adaptive Ghost)

- High-Entropy Pixel Selection:

  Technique: Instead of traditional sequential LSB (Least Significant Bit) embedding, which is easily detected, the system uses the AI-generated Location Map to skip "smooth" areas (like clear skies) and only embed data in "noisy" areas.

- Multi-Objective Optimization:
    - Technique: Balancing the trade-off between Hiding Capacity (how much data can be hidden) and Imperceptibility (how much the image changes).
    - Goal: Minimizing the Mean Squared Error (MSE) while maximizing the data payload.

4. Performance and Quality Metrics

To validate the system, the following mathematical techniques are used to compare the Cover Image and the Stego Image :

- PSNR (Peak Signal-to-Noise Ratio): * Measures the ratio between the maximum possible power of a signal and the power of corrupting noise. Higher PSNR (typically > 30 dB) indicates better imperceptibility.

- SSIM (Structural Similarity Index):
    - A perception-based model that considers luminance, contrast, and structure. An SSIM value closer to 1.0 signifies that the Stego image is virtually indistinguishable from the original.

While perceptual metrics like PSNR and SSIM measure visual fidelity, additional techniques ensure the data is mathematically invisible to specialized detection software.

Histogram Stability Analysis:
Technique: Comparing the frequency distribution of pixel intensities before and after embedding.
Goal: Ensuring that the LSB modifications do not cause "combing" or "pairing" effects in the image histogram, which are common red flags for Chi-square statistical attacks.
Additional Insight: Maintaining a smooth and natural histogram distribution helps the stego image closely mimic the statistical properties of the original image, reducing detectability.

Statistical Steganalysis Resistance:
Technique: Applying tests such as Chi-square analysis and RS (Regular/Singular) analysis to evaluate embedding artifacts.
Goal: Minimizing detectable statistical anomalies that could reveal the presence of hidden data.
Additional Insight: A robust system ensures that embedded data does not significantly alter pixel correlation patterns, preserving the image's natural randomness.Uniform embedding reduces clustering effects, making the hidden data pattern appear more natural and less suspicious. This approach increases both perceptual and statistical security by leveraging regions inherently resistant to detection.A robust

system ensures that embedded data does not significantly alter pixel correlation patterns, preserving the image's natural randomness.

Table 3.1 Core System Modules and Objectives

Module	Primary Technique	Objective
Encryption	AES-256 GCM	Data Confidentiality & Integrity
Edge Analysis	HED (Deep Learning)	Identification of low-sensitivity areas
Mapping	CNN-based Entropy Analysis	Intelligent Location Map generation
Verification	SHA-256 & SSIM	Integrity check and visual fidelity

3.2.2 Sample Dataset Used

This section outlines the datasets utilized to train and evaluate the system, highlighting the use of high-fidelity benchmarks to ensure robust performance. By prioritizing the DIV2K dataset for its texture complexity and resolution, and cross-referencing with security-focused sets like BOSSBase, the framework is validated against both visual imperceptibility and advanced steganalysis.

1. Primary Dataset: **DIV2K** (Diverse 2K Resolution)

The DIV2K dataset is the gold standard for modern high-resolution image processing and steganography. It consists of 1,000 high-quality images (800 training, 100 validation, 100 testing) with diverse contents including landscapes, urban scenes, and complex textures.

- Why DIV2K is preferred over other datasets:
    - Higher Texture Complexity: Unlike MNIST (simple digits) or CIFAR-10 (low resolution), DIV2K contains high-frequency details. This is critical for our Neural Scout (HED) module to practice identifying complex "hiding spots."
    - Resolution Superiority: Most datasets like ImageNet or COCO use compressed or lower-resolution images. DIV2K provides 2K resolution, allowing the model to learn embedding patterns that remain imperceptible even when the image is zoomed in.
    - Downscaling Robustness: DIV2K includes various "tracks" (bicubic, unknown downscaling). Using these helps train our system to be robust against common image processing attacks. This significantly enhances the model's ability to generalize effectively across diverse and complex real-world scenarios, where image transformations, distortions, and processing variations are often highly unpredictable and inconsistent.
    - Imperceptibility Benchmarking: Because the images are high-fidelity, any noise introduced by steganography is easier to detect statistically. Succeeding on DIV2K proves the system's superior PSNR and SSIM performance.

2. Comparative Datasets

Table 3.2 Comparative Analysis Of Sample Datasets

Dataset	Primary Use Case	Key Strength for Steganography
DIV2K	**Proposed System**	**High resolution & texture variety for AI training.**
BOSSBase	Statistical Attacks	Benchmarking against specialized steganalysis tools.
ImageNet	Scalability	Ensuring the model works across diverse image classes.

COCO	Feature Coupling	Testing embedding in complex, multi-object scenes.

Diversity in Training and Testing: By leveraging a combination of these datasets, the system is exposed to a wide spectrum of image frequencies—from the sharp, high-resolution edges in DIV2K to the complex, cluttered environments in COCO. This ensures the CNN learning process is generalized rather than overfitted to a specific type of photography.

Benchmarking against State-of-the-Art (SOTA): The inclusion of BOSSBase is critical for validating the system's security. Since this dataset is the standard for steganalysis competitions, achieving low detection rates on these images provides a scientifically rigorous proof of the system's "stealth" capabilities.

3.2.3 Hardware and Software Specifications

This section outlines the essential hardware components and software frameworks required to successfully deploy and evaluate the proposed system. Because the project relies heavily on intensive computer vision tasks, establishing a robust computational environment is critical for optimal performance. Table 3.3 provides a comprehensive breakdown of these technical prerequisites, detailing the specific tools selected to ensure seamless AI model integration and reliable image processing. These specifications are particularly vital for managing the asymmetric computational load required by the sender-side neural network operations.

Table 3.3 Hardware and Software Specifications

Category	Component	Description / Purpose
Core AI & Processing Engine	Python 3.10+	Main language for AI and image processing.
	PyTorch/ TensorFlow	Used to run the HED CNN model for feature extraction.

	OpenCV	Handles LSB embedding and various image manipulation operations.
	NumPy	Used for fast matrix and high-dimensional pixel computations.
System Integration (Optional)	Flask	Backend framework that connects AI modules via RESTful APIs.
	React.js	Provides the frontend user interface for image uploads and results.
Database & Storage	Local / Cloud Storage	Dedicated storage for managing cover and stego images.
Hardware Requirements	CPU	Intel i5/i7 or AMD Ryzen 5/7 for stable multi-threaded execution.
	RAM	8GB minimum (16GB recommended) for handling high-res image tensors.

	GPU	GPU required for accelerated CNN model processing.

3.3 Evaluation Metrics

To assess the performance of the proposed AI-optimized steganography system, the following metrics are employed to measure imperceptibility, security, and recovery accuracy.

1. Perceptual Quality & Imperceptibility

These metrics measure how well the secret message is hidden and whether the Stego Image (S) remains visually identical to the Cover Image (C).

- Peak Signal-to-Noise Ratio (PSNR):
  - Description: Measures the ratio between the maximum possible power of a signal and the power of corrupting noise (MSE).
  - Significance: A higher PSNR indicates higher image quality. For steganography, a PSNR > 30 dB is generally considered acceptable, while > 40 dB is excellent.

- Structural Similarity Index (SSIM):
  - Description: A perception-based metric that evaluates luminance, contrast, and structure.
  - Significance: Unlike PSNR, SSIM maps better to human visual perception. A value of 1.0 indicates a perfect match between the cover and stego images.

2. Statistical Security

These metrics evaluate the system's resistance to steganalysis (detection by statistical algorithms).

- Mean Squared Error (MSE):
  - Description: Calculates the average squared difference between the pixel values of the cover and stegonagraphy images.
  - Significance: Lower MSE values prove that the AI's Neural Scout successfully minimized the distortion during the embedding process.
- Histogram Analysis:
  - Description: Comparing the pixel intensity distribution of the Cover vs. Stego image.

- Significance: A secure system should result in a Stego histogram that is statistically indistinguishable from the Cover histogram, leaving no "footprints" for attackers.

3. Data Integrity & Reliability

These metrics ensure that the secret message can be extracted without errors.

- Bit Error Rate (BER):
  - Description: The ratio of the number of incorrectly extracted bits to the total number of bits embedded.
  - Significance: For reliable communication, the BER should be 0 (or near-zero), ensuring a perfect reconstruction of the secret message.
- Payload Capacity (BPP):
  - Description: Measured in Bits Per Pixel (BPP), it defines the maximum amount of information that can be hidden without significantly degrading the image.
- SHA-256 Verification:
  - Description: A cryptographic comparison of the original message hash and the extracted message hash.
  - Significance: Acts as a pass/fail check for data integrity.

4. Computational Efficiency & Robustness

Beyond image quality and security, these metrics evaluate the practical deployment of the system in real-world scenarios.

- Execution Time (Latency):
  - Description: Measures the time taken for the CNN to generate the mask and the LSB engine to complete embedding.
  - Significance**:** Crucial for real-time communication; a lower execution time indicates a more optimized and usable pipeline.
- Robustness to Image Processing:
  - Description: Testing the extraction success after the Stego image undergoes common transformations like JPEG compression, cropping, or scaling.
  - Significance: High robustness ensures that the secret message remains recoverable even if the carrier image is slightly modified during transit.
- Correlation Coefficient (r):
  - Description: Quantifies the statistical relationship between the pixels of the cover and stego images.
  - Significance: A coefficient approaching 1 indicates that the structural and statistical properties of the image have been preserved, minimizing the risk of detection by spatial domain steganalysis.

5. Summary of Metric Synergies

The ultimate efficacy of the GuardianPixel framework is determined by the Steganographic Triangle, a critical trade-off between Capacity, Security, and Imperceptibility. By systematically analyzing these metrics, the framework can be fine-tuned to ensure that the AI-driven selection process maximizes data throughput without crossing the threshold of statistical detectability or perceptual distortion.

6. Benchmarking Against State-of-the-Art (SOTA)

To establish the superiority of the proposed framework, the evaluation process includes a comparative analysis against traditional LSB, Edge-Least Significant Bit (E-LSB), and existing Deep Learning models (such as SteganoGAN). This benchmarking focuses on:

- Ablation Studies**:** Evaluating the specific performance gain provided by the HED (Neural Scout) module compared to standard CNN-only architectures.
- Visual Turing Test: Conducting subjective human evaluations where observers attempt to distinguish between original and stego images to validate the SSIM scores.
- Detection Probability : Utilizing automated steganalysis tools (like StegExpose) to calculate the probability of a hidden message being detected, ensuring the system maintains a high False Negative rate for potential interceptors.

7. Conclusion of Evaluation

Collectively, these metrics provide a 360-degree view of the system's performance. While PSNR and SSIM confirm visual transparency, BER and SHA-256 guarantee that the asymmetric architecture delivers on its promise of 100% lossless recovery. This rigorous evaluation phase ensures that the framework is not just theoretically sound but practically viable for high-stakes digital communication.

Chapter 4

Applications

AI-based image steganography serves as a sophisticated tool for concealing sensitive information across diverse sectors, ranging from national defense to personal healthcare. By leveraging deep learning, these applications ensure that data remains both invisible to the naked eye and resilient against advanced detection techniques. The following list details how this technology facilitates secure, covert communication in various real-world scenarios.

4.1 Secure Military and Defense Communication

AI-based steganography is used to transmit highly sensitive military information by embedding secret data within digital images. Advanced encoder–decoder models improve robustness against interception, signal distortion, and steganalysis attacks, ensuring secure and covert communication in critical operations.

4.2 Medical Data Security and Privacy

Confidential patient information such as medical history, prescriptions, and diagnostic reports can be embedded within medical images like MRI or CT scans. This approach ensures secure storage and transmission while preserving image quality, maintaining patient confidentiality, and complying with data protection standards.

4.3 Digital Watermarking and Copyright Protection

Steganography techniques can embed ownership details, authentication codes, or digital signatures within multimedia content. AI-based methods enhance imperceptibility and robustness, making it difficult to remove or tamper with the watermark, thereby protecting intellectual property rights.

4.4 Covert Communication Systems

AI-based steganography conceals the very existence of communication by hiding messages within images. Deep learning models generate highly secure stego-images that are visually indistinguishable from original images, making detection by unauthorized parties extremely difficult.

4.5 Cloud Storage and Data Protection

Sensitive data can be embedded into images before being uploaded to cloud platforms, providing an additional security layer beyond encryption. Even if unauthorized access occurs, the hidden information remains protected and difficult to extract without the proper decoding mechanism.

4.6 Secure Financial Transactions

Financial data such as transaction details, account information, or authentication tokens can be hidden within images during transmission. AI-based steganography enhances security by reducing the risk of data leakage, fraud, and cyber-attacks in online banking systems.

4.7 Law Enforcement and Digital Forensics

Steganography can be used by law enforcement agencies to securely store and transmit confidential investigation data. Additionally, AI-based techniques assist in detecting hidden information within digital media, aiding in cybercrime analysis and forensic investigations.

4.8 Satellite Image Data Security

AI-based image steganography can be applied to satellite imagery to securely embed sensitive information such as geographic data, surveillance details, or communication signals within images. This ensures secure transmission of data between ground stations and satellites while maintaining image quality and protecting critical information from unauthorized access or interception.

4.9 Internet of Things (IoT) Security

AI-based steganography can be used in IoT devices to securely transmit sensor readings, device credentials, and control commands within image data. This adds an extra layer of protection for smart homes, healthcare devices, and industrial automation systems against unauthorized access and cyber threats.

4.10 Secure Social Media Communication

Images shared over social media platforms can be used as carriers for hidden confidential messages or authentication data. AI-based methods help maintain image quality while enabling private communication and secure information exchange over public networks.

4.11 E-Governance and Confidential Document Transfer

Government departments can use AI-based steganography to securely transmit confidential reports, citizen records, and administrative data by embedding information within digital images. This helps ensure privacy, authenticity, and protection of sensitive national data.

Chapter 5

Summary

In this report, an AI-based image steganography system utilizing an asymmetric, header-based architecture is proposed. The limitations of existing techniques, such as standard Least Significant Bit (LSB) embedding, including low robustness and a lack of intelligent data placement, are discussed.

The proposed system utilizes deep learning techniques—specifically Convolutional Neural Networks (CNN) and Holistically-Nested Edge Detection (HED)—exclusively on the sender side to securely embed secret data. This AI acts as a "Neural Scout" to intelligently select high-entropy embedding regions, reducing visual distortion and enhancing the imperceptibility of the payload. The coordinates of these optimal regions are compiled into a location map, which is then embedded as a metadata header into the stego-image alongside the AES-256 encrypted ciphertext. Consequently, the receiver architecture remains highly efficient and lightweight, accurately extracting the hidden data deterministically without requiring a secondary neural network decoder.

A comparison between traditional and proposed methods highlights improvements in terms of security, imperceptibility, and robustness against detection. The implementation details, system architecture, and dataset requirements are described, along with evaluation metrics such as PSNR, MSE, and SSIM used to assess image quality and system effectiveness. Overall, the proposed system provides a secure, efficient, and scalable solution for image steganography, making it highly suitable for real-world applications in secure digital communication and data protection.

References

[1] Jumanto, J., et al. (2018). “An enhanced LSB-image steganography using the hybrid Canny-Sobel edge detection”, *Cybernetics and Information Technologies*, 18(2), 74-88.

[2] Ray, B., Mukhopadhyay, S., Hossain, S., Ghosal, S.K., Sarkar, R. (2021). “Image steganography using deep learning based edge detection”, *Multimedia Tools and Applications*, 80(24), 33475-33503.

[3] Kich, I., Taouil, Y., et al. (2021). “CNN auto-encoder network using dilated inception for image steganography”, *International Journal of Fuzzy Logic and Intelligent Systems*, 21(4), 358-368.

[4] Al-Rawashdeh, R., Rahman, M.M., Niazi, M. (2025). “Robust Image Steganography Approach based on Edge Detection Combined with CNN Algorithm”, *IEEE Access*.

[5] Xiao, A., Li, Z., Wang, G., Zheng, L., Sun, H. (2025). “SRIS-Net: a robust image steganography algorithm based on feature score maps. Frontiers of Information Technology & Electronic Engineering”, 26(6), 930-945.

[6] Alanzy, M., Alomrani, R., Alqarni, B., Almutairi, S. (2023). “Image steganography using LSB and hybrid encryption algorithms”, *Applied Sciences*, 13(21), 11771.

[7] Rafat, K.F., Sajjad, S.M. (2024). “Advancing Reversible LSB Steganography: Addressing Imperfections and Embracing Pioneering Techniques for Enhanced Security”, *IEEE Access*.

[8] Marvel, L.M., Boncelet, C.G., Retter, C.T. (1999). “Spread spectrum image steganography”, *IEEE Transactions on Image Processing*, 8(8), 1075-1083.

[9] Kuznetsov, O., Frontoni, E., Chernov, K. (2024). “Beyond traditional steganography: Enhancing security and performance with spread spectrum image steganography”, *International Journal of Speech Technology*, 54(7), 5253-5277.

[10] Tafreshi, H.F., Papadakis, E., Baryannis, G. (2025). “Secure Spread Spectrum Image Steganography Using a CNN-Based Learned Detector”, *IEEE Access.*

[11] Judy, S., Khilar, R. (2025). “Mimic Octopus Adaptive Framework for entropy-based encryption and steganography in medical imaging”, *Discover Computing*, 28, 216.

Acknowledgement

We would like to express our sincere gratitude to Dr. Sandeep Joshi, Honorable Principal of MES's Pillai College of Engineering, for providing us with the opportunity and institutional support to undertake and successfully complete this project.

We extend our heartfelt thanks to Dr. Monika Bhagwat, Head of the Department of Electronics and Computer Science and our project guide, for her invaluable guidance, constant encouragement, and insightful suggestions throughout the course of this project. Her expertise and mentorship have been instrumental in shaping and refining our work.

We would also like to express our sincere appreciation to Prof. Ajit Saraf, Project Coordinator, for his guidance, support, and timely coordination, which greatly facilitated the smooth progress of our project work.

We would also like to acknowledge the support and cooperation extended by all the faculty members and staff of the Department of Electronics and Computer Science, whose assistance has contributed significantly to the successful completion of this project.

Nimisha Thoppil
Sagarika Pramod
Aishwarya Vaidya
Vaibhav Shelar