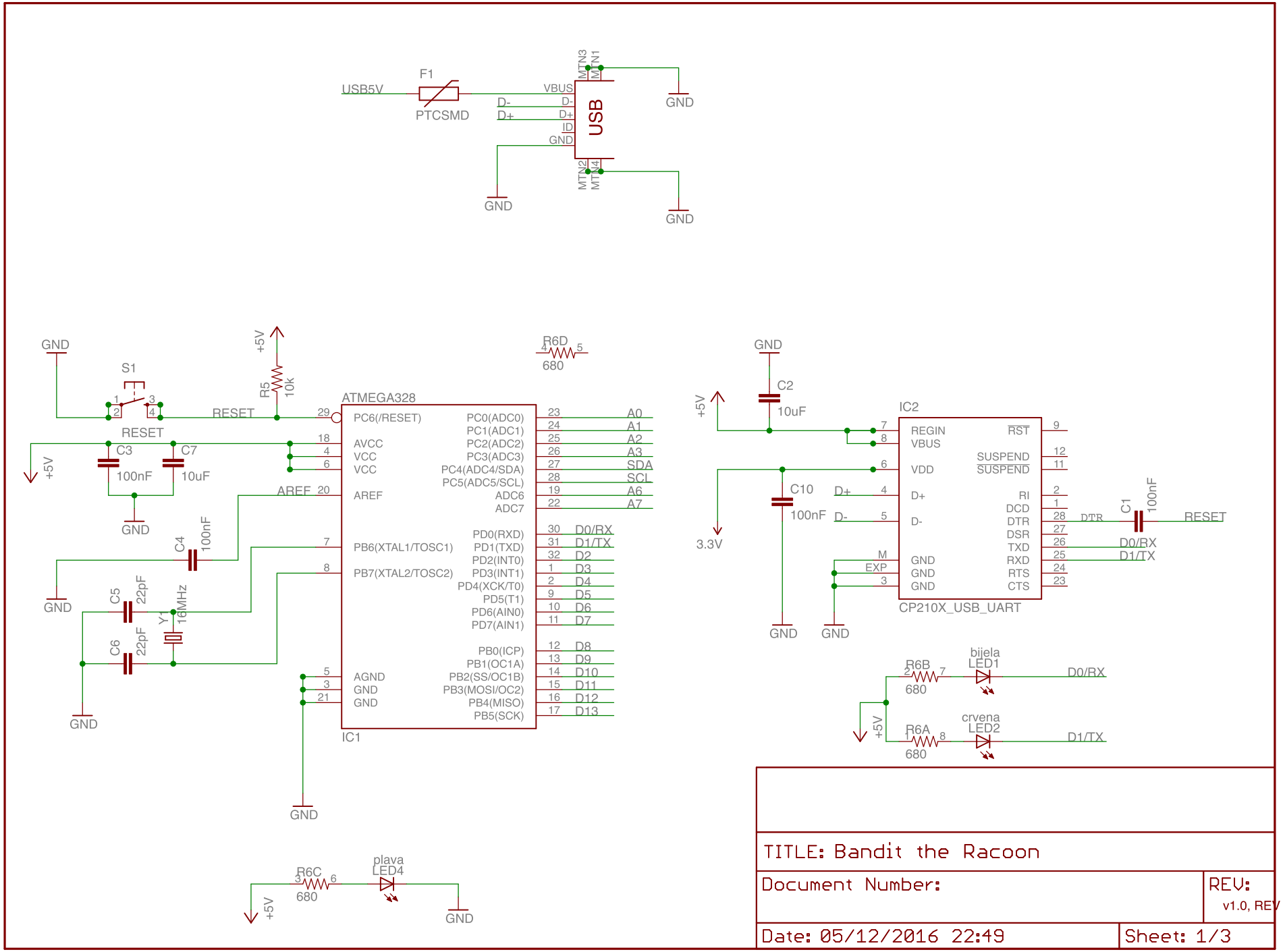
USB5V
F1
PTCSMD
D-
D+
VBUS
D-
D+
ID
GND
USB
MTN3
MTN1
MTN2
MTN4
GND
GND
GND
GND
S1
RESET
RESET
R5
10k
+5V
C3
100nF
C7
10uF
GND
C4
100nF
C5
22pF
C6
22pF
Y1
16MHz
GND
GND
GND
ATMEGA328
PC6(/RESET)
AVCC
VCC
VCC
AREF
PB6(XTAL1/TOSC1)
PB7(XTAL2/TOSC2)
AGND
GND
GND
PC0(ADC0)
PC1(ADC1)
PC2(ADC2)
PC3(ADC3)
PC4(ADC4/SDA)
PC5(ADC5/SCL)
ADC6
ADC7
PD0(RXD)
PD1(TXD)
PD2(INT0)
PD3(INT1)
PD4(XCK/T0)
PD5(T1)
PD6(AIN0)
PD7(AIN1)
PB0(ICP)
PB1(OC1A)
PB2(SS/OC1B)
PB3(MOSI/OC2)
PB4(MISO)
PB5(SCK)
A0
A1
A2
A3
SDA
SCL
A6
A7
D0/RX
D1/TX
D2
D3
D4
D5
D6
D7
D8
D9
D10
D11
D12
D13
IC1
R6D
680
GND
C2
10uF
+5V
IC2
REGIN
VBUS
VDD
D+
D-
GND
GND
GND
M
EXP
RST
SUSPEND
SUSPEND
RI
DCD
DTR
DSR
TXD
RXD
RTS
CTS
CP210X_USB_UART
C10
100nF
3.3V
GND
GND
DTR
C1
100nF
RESET
D0/RX
D1/TX
R6B
680
bijela
LED1
D0/RX
R6A
680
crvena
LED2
D1/TX
+5V
R6C
680
plava
LED4
+5V
GND
TITLE: Bandit the Racoon
Document Number:
REV:
v1.0, REV A
Date: 05/12/2016 22:49
Sheet: 1/3