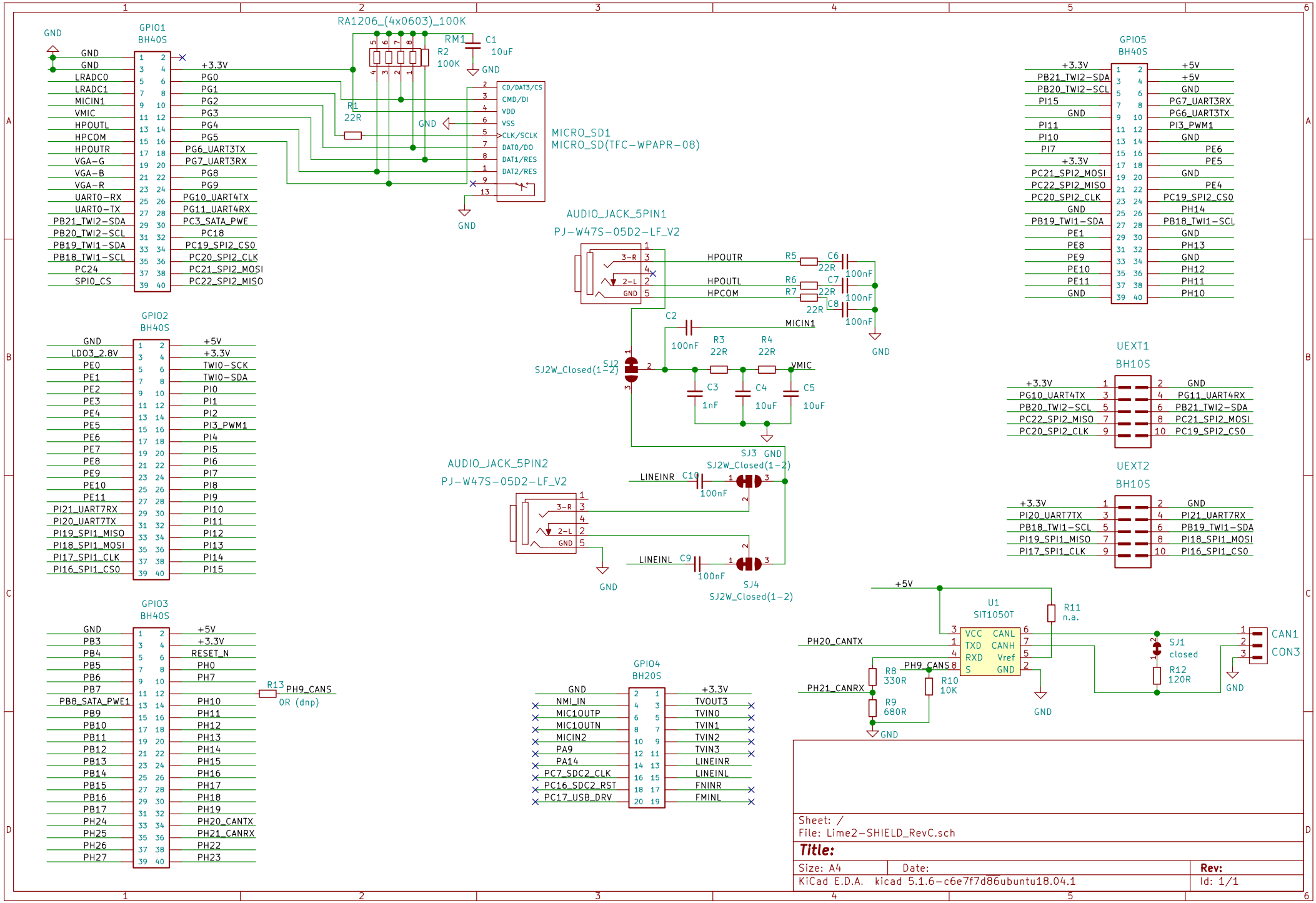
GPIO1
BH40S
GND
GND
GND
LRADC0
LRADC1
MICIN1
VMIC
HPOUTL
HPCOM
HPOUTR
VGA-G
VGA-B
VGA-R
UART0-RX
UART0-TX
PB21_TWI2-SDA
PB20_TWI2-SCL
PB19_TWI1-SDA
PB18_TWI1-SCL
PC24
SPI0_CS
+3.3V
PG0
PG1
PG2
PG3
PG4
PG5
PG6_UART3TX
PG7_UART3RX
PG8
PG9
PG10_UART4TX
PG11_UART4RX
PC3_SATA_PWE
PC18
PC19_SPI2_CS0
PC20_SPI2_CLK
PC21_SPI2_MOSI
PC22_SPI2_MISO
RA1206_(4x0603)_100K
RM1
R2
100K
C1
10uF
R1
22R
CD/DAT3/CS
CMD/DI
VDD
VSS
CLK/SCLK
DAT0/DO
DAT1/RES
DAT2/RES
MICRO_SD1
MICRO_SD(TFC-WPAPR-08)
AUDIO_JACK_5PIN1
PJ-W47S-05D2-LF_V2
3-R
2-L
HPOUTR
HPOUTL
HPCOM
R5
R6
R7
C6
C7
C8
22R
100nF
MICIN1
C2
R3
R4
SJ2
SJ2W_Closed(1-2)
VMIC
C3
C4
C5
1nF
10uF
SJ3
SJ2W_Closed(1-2)
AUDIO_JACK_5PIN2
PJ-W47S-05D2-LF_V2
LINEINR
C10
LINEINL
C9
SJ4
SJ2W_Closed(1-2)
GPIO2
BH40S
LDO3_2.8V
PE0
PE1
PE2
PE3
PE4
PE5
PE6
PE7
PE8
PE9
PE10
PE11
PI21_UART7RX
PI20_UART7TX
PI19_SPI1_MISO
PI18_SPI1_MOSI
PI17_SPI1_CLK
PI16_SPI1_CS0
+5V
+3.3V
TWI0-SCK
TWI0-SDA
PI0
PI1
PI2
PI3_PWM1
PI4
PI5
PI6
PI7
PI8
PI9
PI10
PI11
PI12
PI13
PI14
PI15
GPIO3
BH40S
PB3
PB4
PB5
PB6
PB7
PB8_SATA_PWE1
PB9
PB10
PB11
PB12
PB13
PB14
PB15
PB16
PB17
PH24
PH25
PH26
PH27
RESET_N
PH0
PH7
PH10
PH11
PH12
PH13
PH14
PH15
PH16
PH17
PH18
PH19
PH20_CANTX
PH21_CANRX
PH22
PH23
R13
PH9_CANS
0R (dnp)
GPIO4
BH20S
NMI_IN
MIC1OUTP
MIC1OUTN
MICIN2
PA9
PA14
PC7_SDC2_CLK
PC16_SDC2_RST
PC17_USB_DRV
TVOUT3
TVIN0
TVIN1
TVIN2
TVIN3
LINEINR
LINEINL
FNINR
FMINL
GPIO5
BH40S
PB21_TWI2-SDA
PB20_TWI2-SCL
PI15
PI11
PI10
PI7
PC21_SPI2_MOSI
PC22_SPI2_MISO
PC20_SPI2_CLK
PB19_TWI1-SDA
PE1
PE8
PE9
PE10
PE11
PG7_UART3RX
PG6_UART3TX
PI3_PWM1
PE6
PE5
PE4
PC19_SPI2_CS0
PH14
PB18_TWI1-SCL
PH13
PH12
PH11
PH10
UEXT1
BH10S
PG10_UART4TX
PB20_TWI2-SCL
PC22_SPI2_MISO
PC20_SPI2_CLK
PG11_UART4RX
PB21_TWI2-SDA
PC21_SPI2_MOSI
PC19_SPI2_CS0
UEXT2
BH10S
PI20_UART7TX
PB18_TWI1-SCL
PI19_SPI1_MISO
PI17_SPI1_CLK
PI21_UART7RX
PB19_TWI1-SDA
PI18_SPI1_MOSI
PI16_SPI1_CS0
U1
SIT1050T
VCC
TXD
RXD
S
CANL
CANH
Vref
GND
R11
n.a.
R8
330R
R9
680R
R10
10K
SJ1
closed
R12
120R
CAN1
CON3
Sheet: /
File: Lime2-SHIELD_RevC.sch
Title:
Size: A4
Date:
Rev:
KiCad E.D.A. kicad 5.1.6-c6e7f7d86ubuntu18.04.1
Id: 1/1