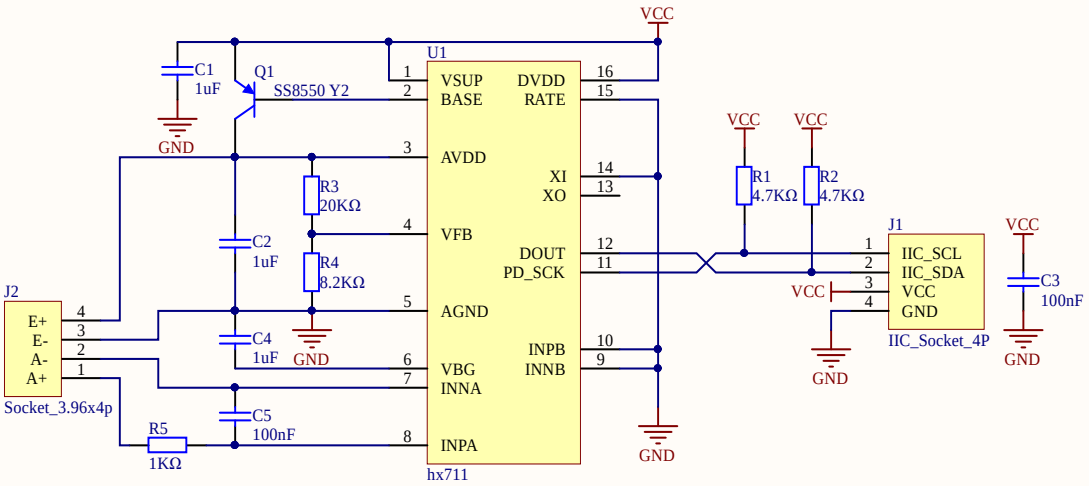

Project Title:	UNIT-WEIGHT.PrjPCB		
Sheet Title:	UNIT-WEIGHT.SchDoc		
Website:	m5stack.com	Revised:	V1.0
Size:	A4	Sheet	1 of 1
Date:	07/18/2018	Drawn by:	Osmar