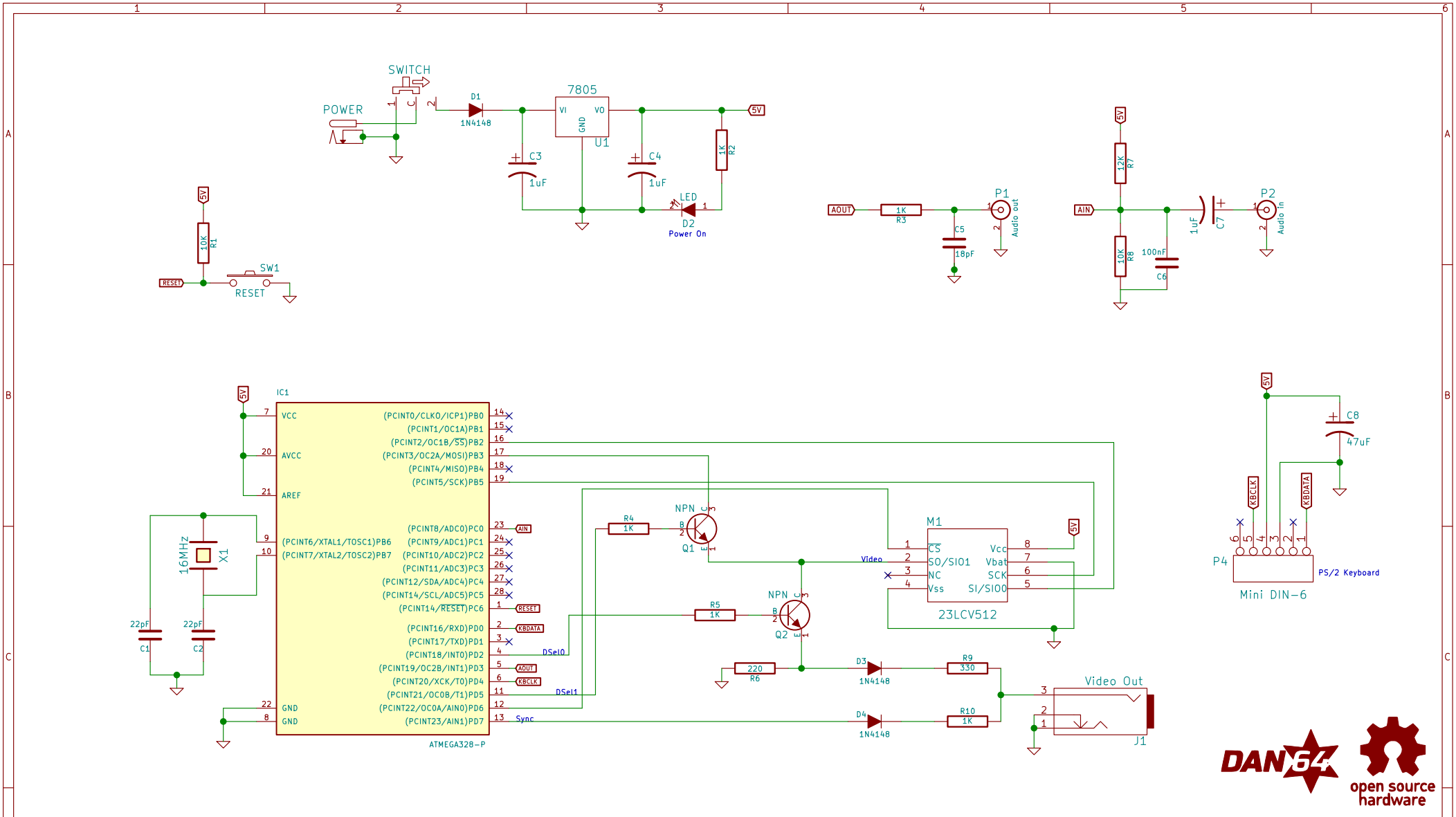

Distributed under CERN OHL 1.2 terms.
http://www.usebox.net/jjm/dan64/cern_ohl_v_1_2.txt

Copyright (C) 2015 ww.usebox.net
An AVR based 8-bit Microcomputer
Juan J. Martínez <jjm@usebox.net>

Sheet: /
File: dan64.sch

Title: DAN64

Size: A4	Date: 2016-05-18	**Rev: 2**
KiCad E.D.A. kicad 4.0.2+dfsg1-2bpo8+1-stable		Id: 1/1