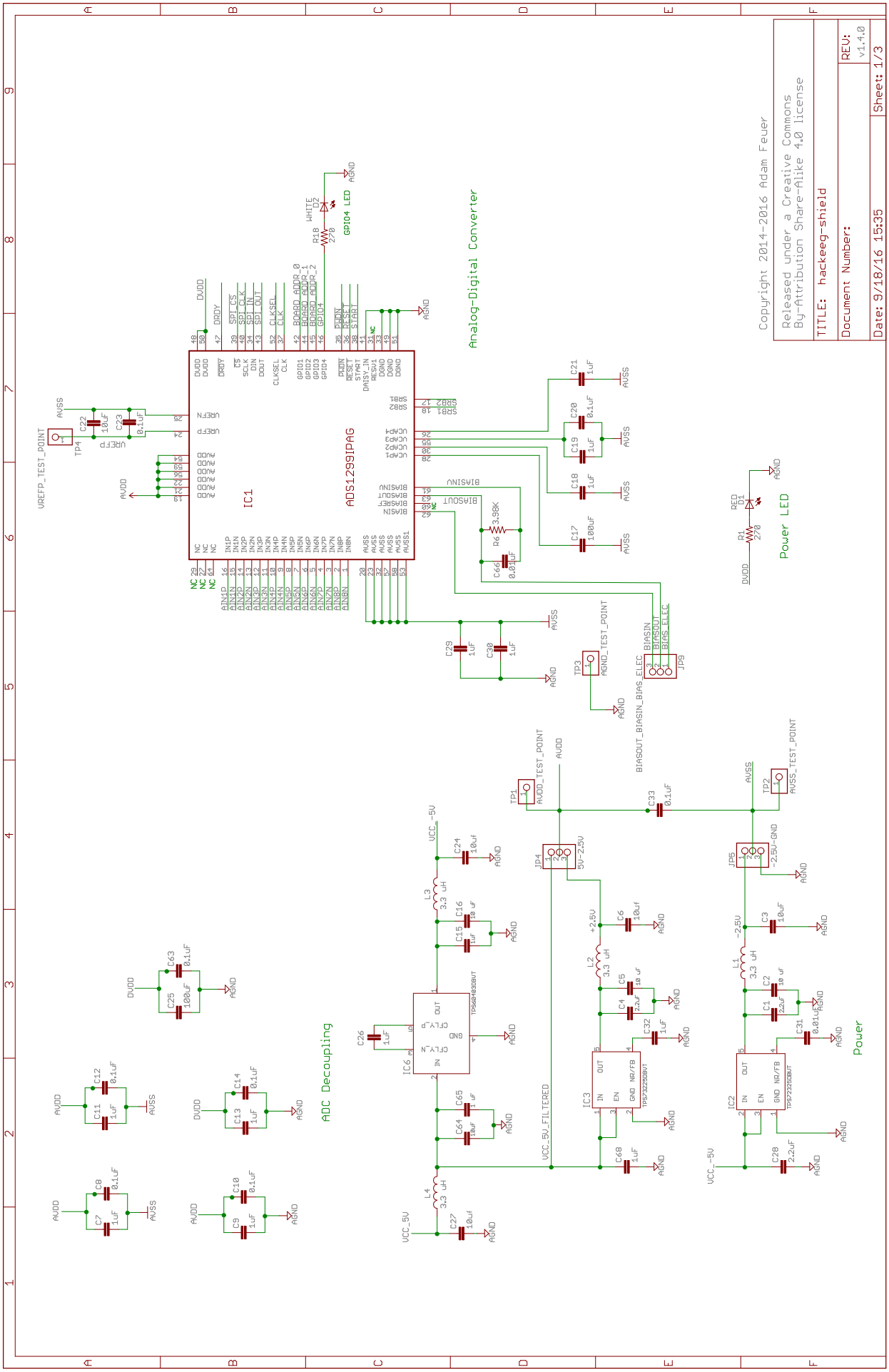
Analog-Digital Converter
ADS1299IPAG
IC1
Power LED
ADC Decoupling
Power
Copyright 2014-2016 Adam Feuer
Released under a Creative Commons
By-Attribution Share-Alike 4.0 license
TITLE: hackeeg-shield
Document Number:
REV: v1.4.0
Date: 9/18/16 15:35
Sheet: 1/3

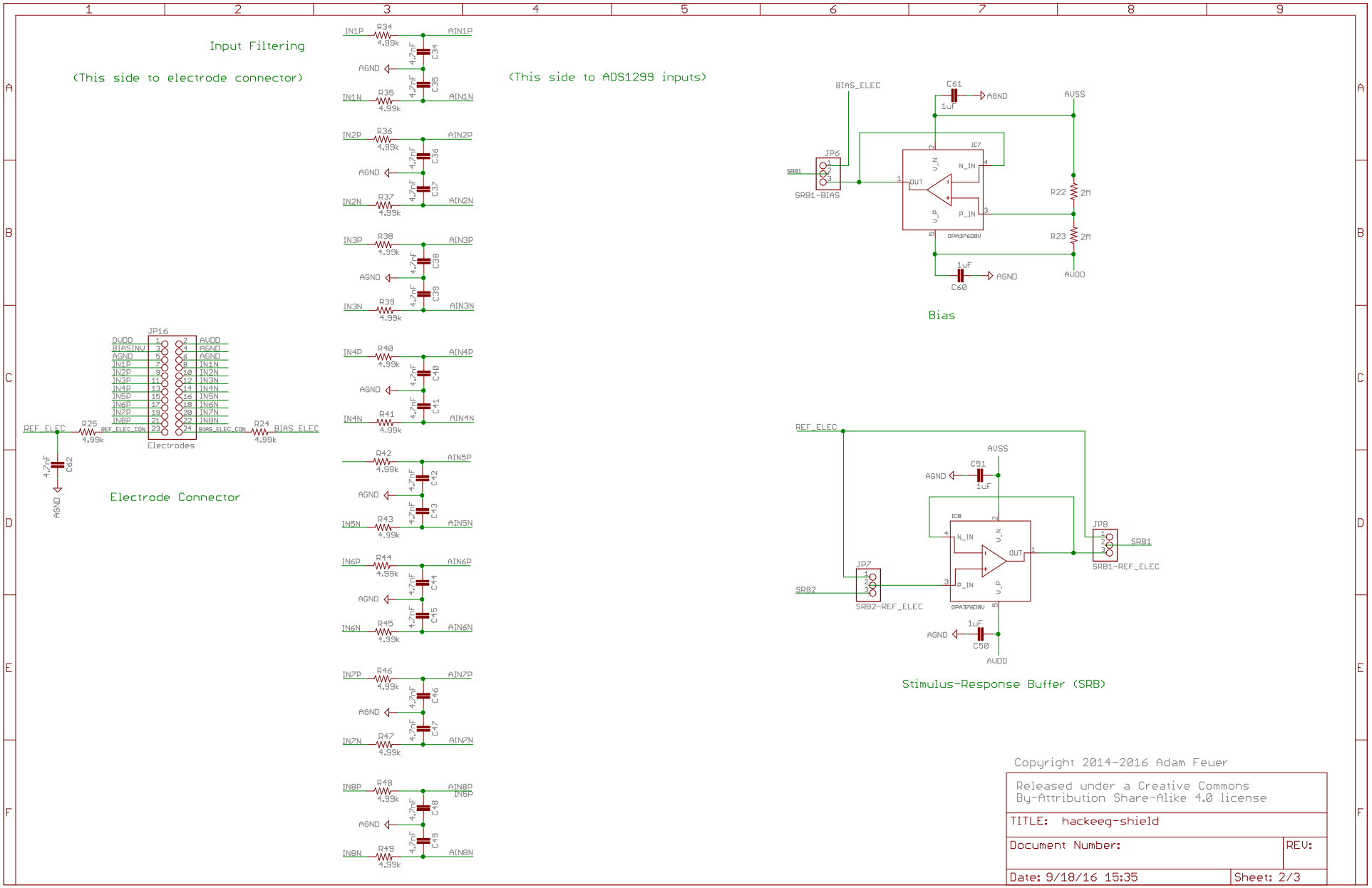

Copyright 2014-2016 Adam Feuer

Released under a Creative Commons By-Attribution Share-Alike 4.0 license

TITLE: hackeeg-shield	
Document Number:	REV:
Date: 9/18/16 15:35	Sheet: 2/3

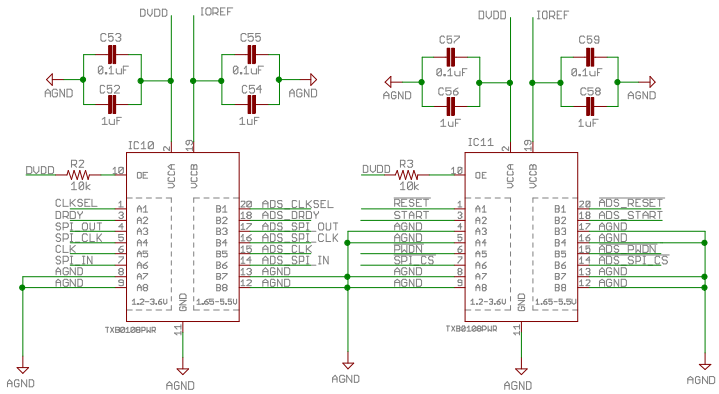

ADS1299 Level Shifting

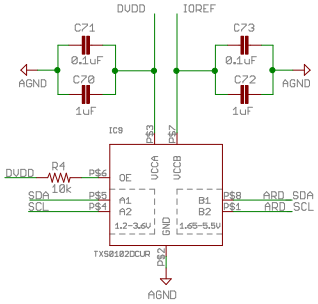

I2C EEPROM Level Shifting

Pins not labeled are not connected (NC)

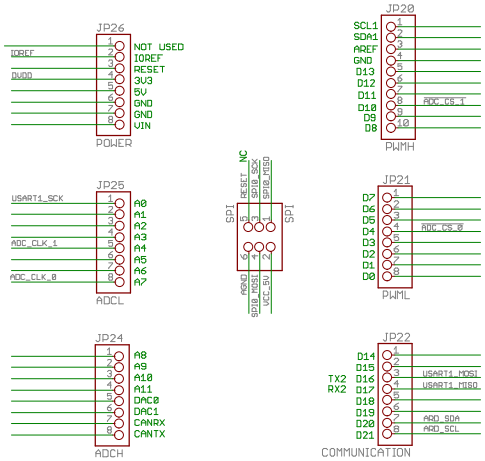

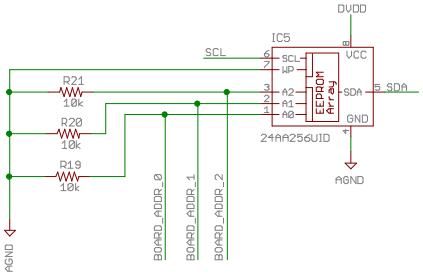

Settings I2C EEPROM with UID

Fiducials (for pick and place machines)

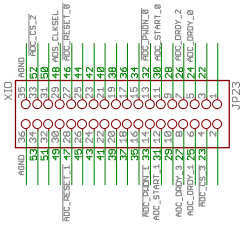

Shield Connectors

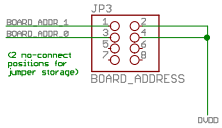

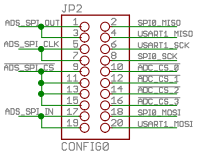

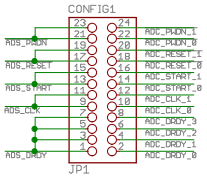

Configuration jumpers

Copyright 2014-2016 Adam Feuer

Released under a Creative Commons By-Attribution Share-Alike 4.0 license

TITLE: hackeeg-shield

Document Number:

REV:

Date: 9/18/16 15:35

Sheet: 3/3