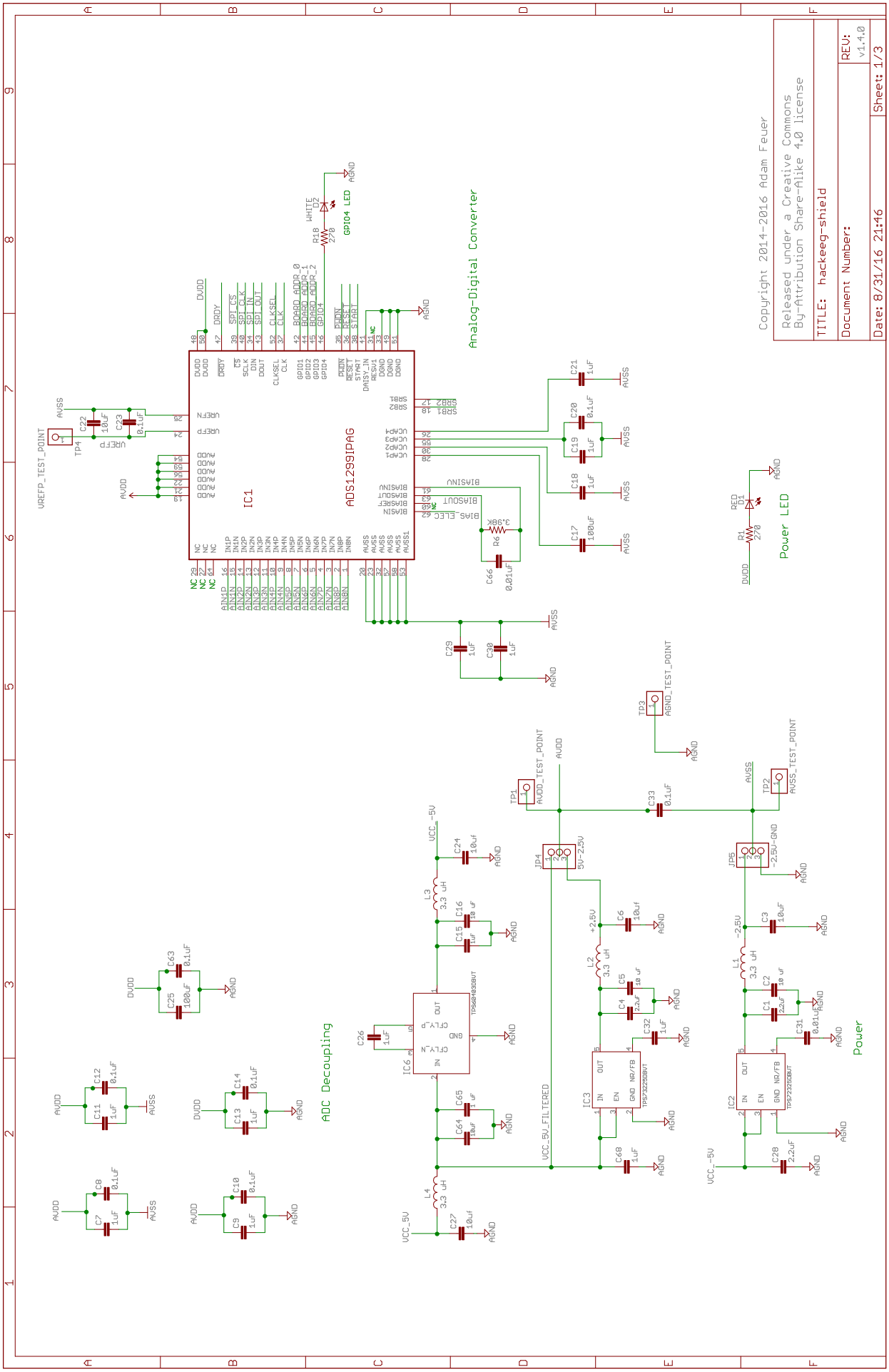

8/31/16 21:47 f=0.59 /Users/adam/Documents/eagle/HackEEG-shield/eagle/hackeeg-shield.sch (Sheet: 1/3)

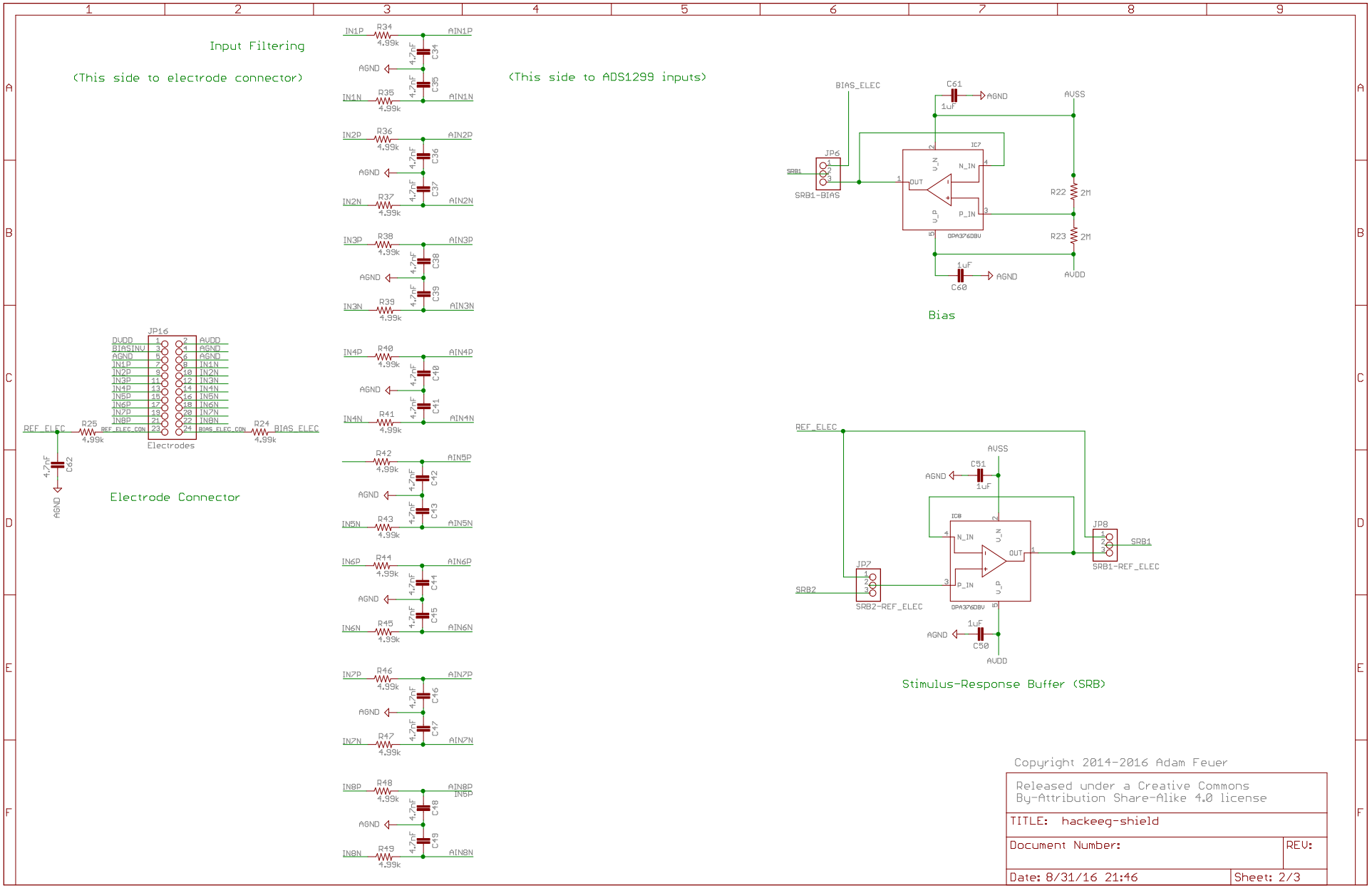

Copyright 2014-2016 Adam Feuer

Released under a Creative Commons By-Attribution Share-Alike 4.0 license

TITLE: hackeeg-shield	
Document Number:	REV:
Date: 8/31/16 21:46	Sheet: 2/3

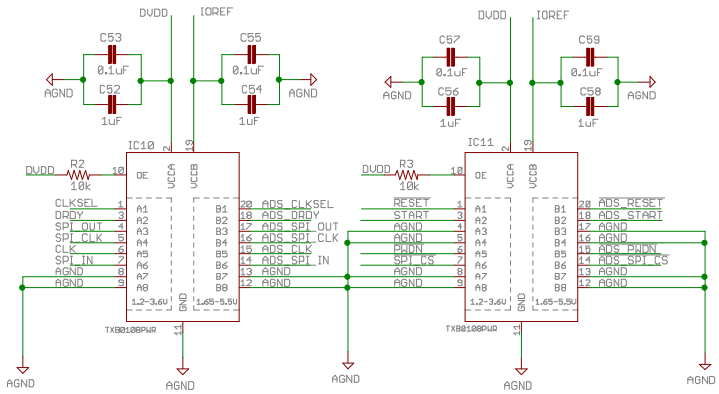

ADS1299 Level Shifting

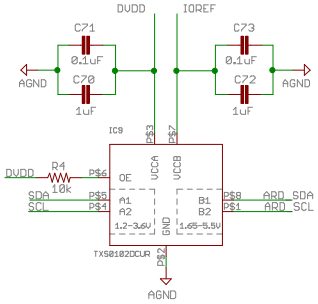

I2C EEPROM Level Shifting

Pins not labeled are not connected (NC)

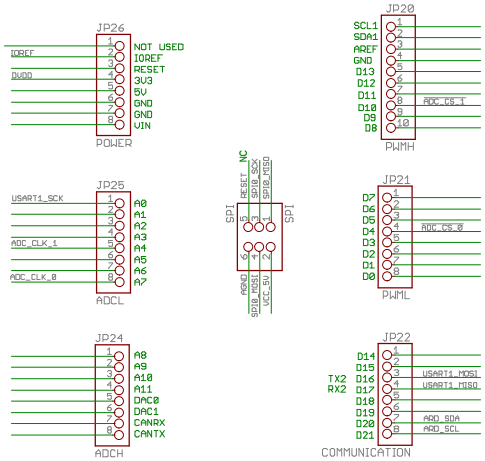

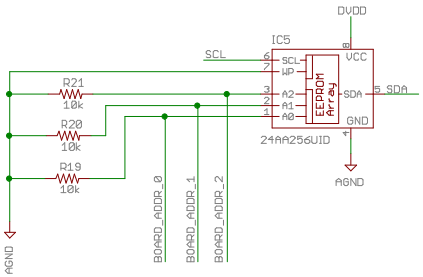

Settings I2C EEPROM with UID

Fiducials (for pick and place machines)

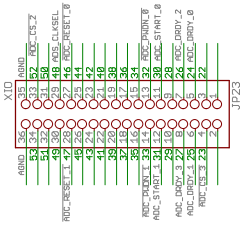

Shield Connectors

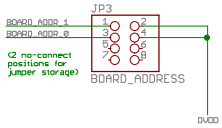

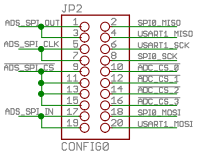

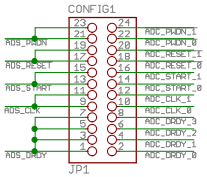

Configuration jumpers

Copyright 2014-2016 Adam Feuer

Released under a Creative Commons By-Attribution Share-Alike 4.0 license

TITLE: hackeeg-shield

Document Number:

REV:

Date: 8/31/16 21:46

Sheet: 3/3