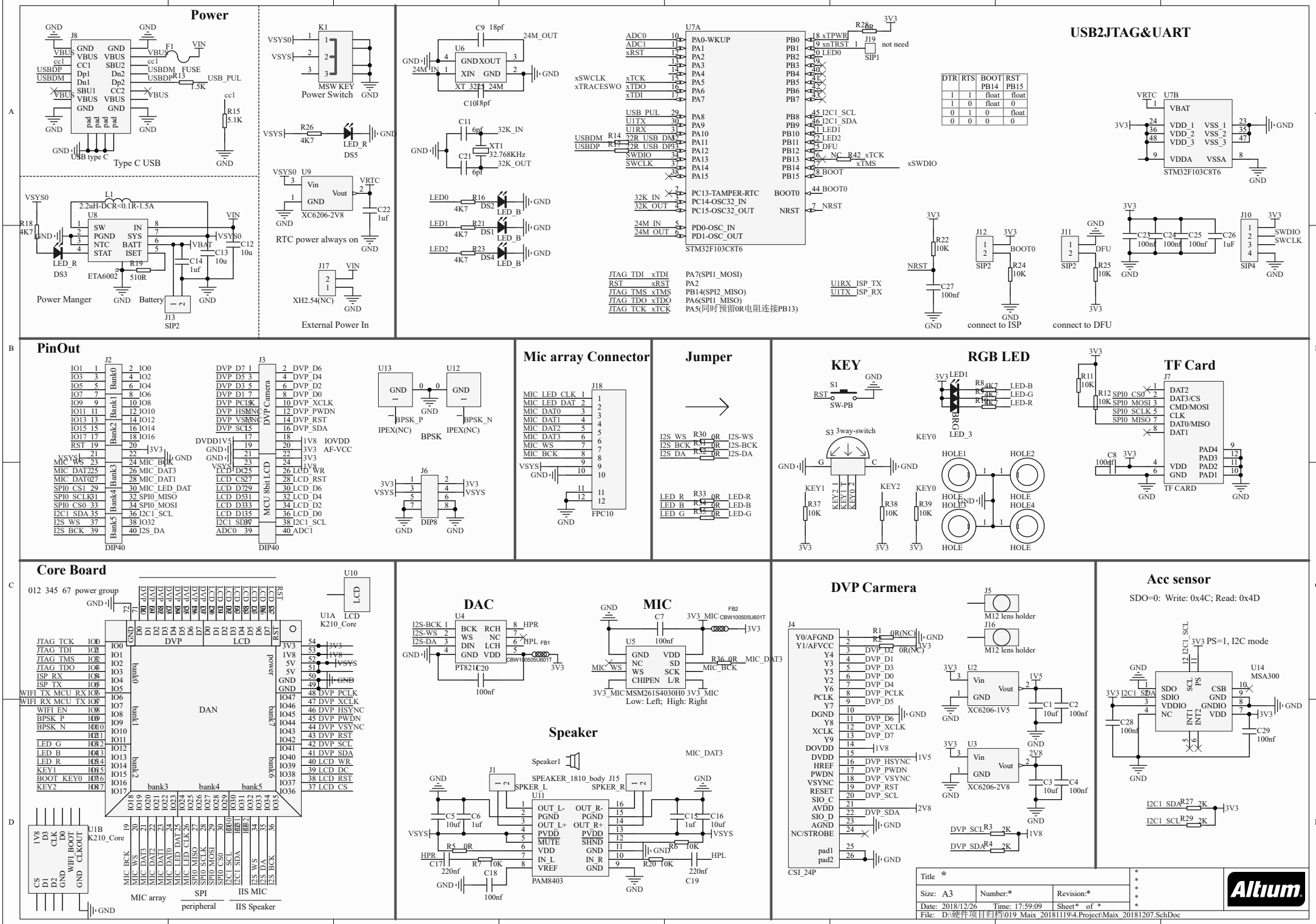
Power
Type C USB
Power Manger
Power Switch
RTC power always on
External Power In
USB2JTAG&UART
STM32F103C8T6
connect to ISP
connect to DFU
PinOut
DIP40
BPSK
Mic array Connector
Jumper
KEY
RGB LED
TF Card
Core Board
DAN
DAC
MIC
Low: Left; High: Right
Speaker
DVP Carmera
Acc sensor
SDO=0: Write: 0x4C; Read: 0x4D
PS=1, I2C mode
Title *
Size: A3
Number:*
Revision:*
Date: 2018/12/26
Time: 17:59:09
Sheet* of *
File: D:\硬件项目归档\019_Maix_20181119\4.Project\Maix_20181207.SchDoc
Altium