REV	DATE	BY	CHANGE
A	10-March-2012	BBT	Initial release

This work is licensed under the Creative Commons Attribution-Share Alike 3.0 Unported License. To view a copy of this license, visit http://creativecommons.org/licenses/by-sa/3.0/ or send a letter to Creative Commons, 171 Second Street, Suite 300, San Francisco, California, 94105, USA.

All derivative works are to be attributed to CircuitCo LLC .

For more information, see http://creativecommons.org/license/results-one?license_code=by-sa

This work is licensed under the Creative Commons Attribution-Share Alike 3.0 Unported License. All derivative works are to be attributed to CircuitCo LLC.

beagleboardtoys is owned by CircuitCo LLC.

beagleboardtoys.com

1380 Presidential Dr.
#100
Richardson, TX 75081
www.beagleboardtoys.com

Title: BeagleBone LCD3 Cape COVER PAGE

Size: B | Document Number: BB-BONE-LCD3-01 | Rev: A

Date: Saturday, March 10, 2012 | Sheet 1 of 4

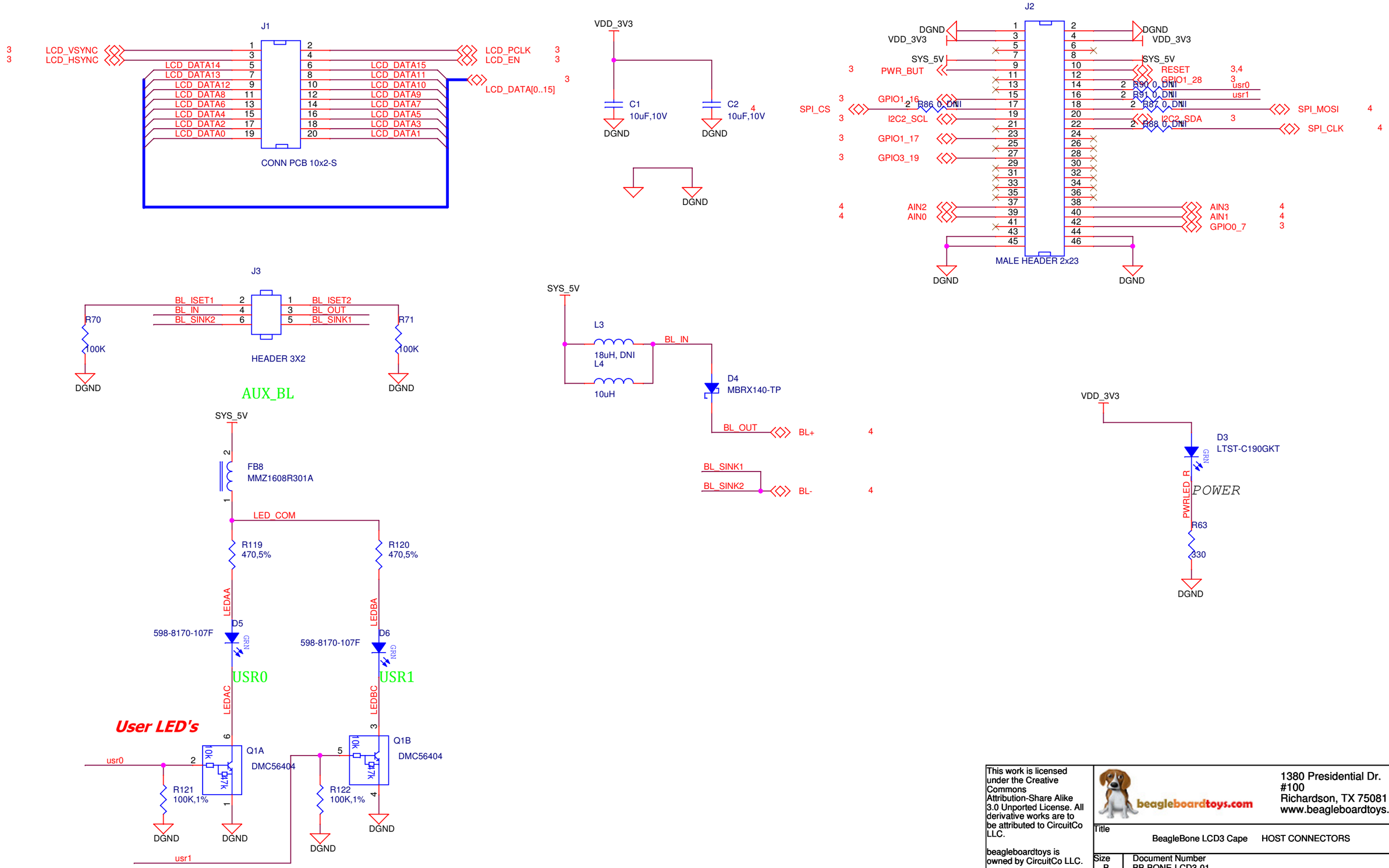

This work is licensed under the Creative Commons Attribution-Share Alike 3.0 Unported License. All derivative works are to be attributed to CircuitCo LLC.

beagleboardtoys is owned by CircuitCo LLC.

beagleboardtoys.com
1380 Presidential Dr.
#100
Richardson, TX 75081
www.beagleboardtoys.com

Title: BeagleBone LCD3 Cape HOST CONNECTORS

Size: B | Document Number: BB-BONE-LCD3-01 | Rev: A

Date: Saturday, March 10, 2012 | Sheet 2 of 4

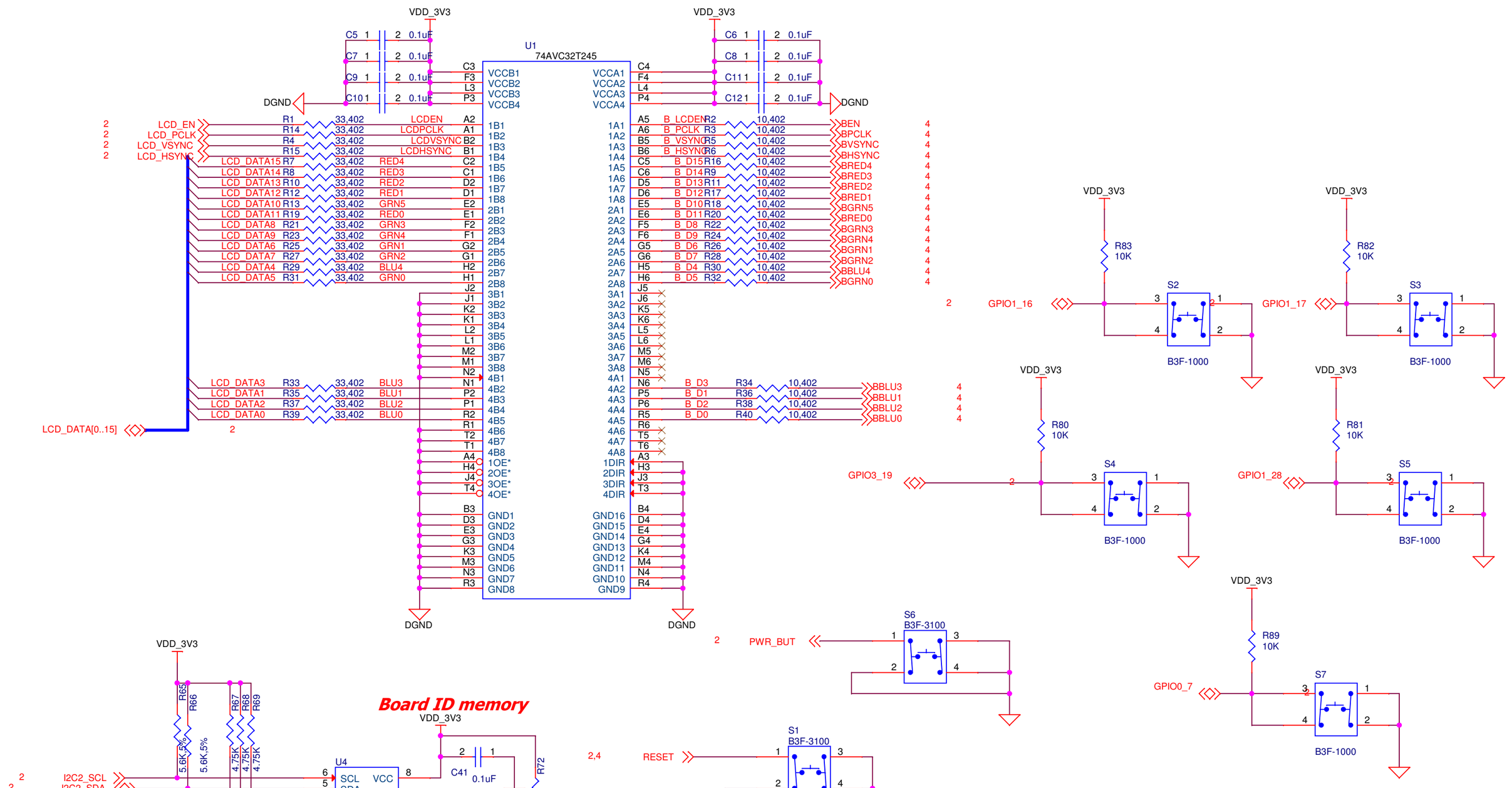

This work is licensed under the Creative Commons Attribution-Share Alike 3.0 Unported License. All derivative works are to be attributed to CircuitCo LLC.

beagleboardtoys is owned by CircuitCo LLC.

beagleboardtoys.com
1380 Presidential Dr.
#100
Richardson, TX 75081
www.beagleboardtoys.com

Title: BeagleBone LCD3 Cape BUFFER

Size	Document Number	Rev
B	BB-BONE-LCD3-01	A

Date: Saturday, March 10, 2012 Sheet 3 of 4

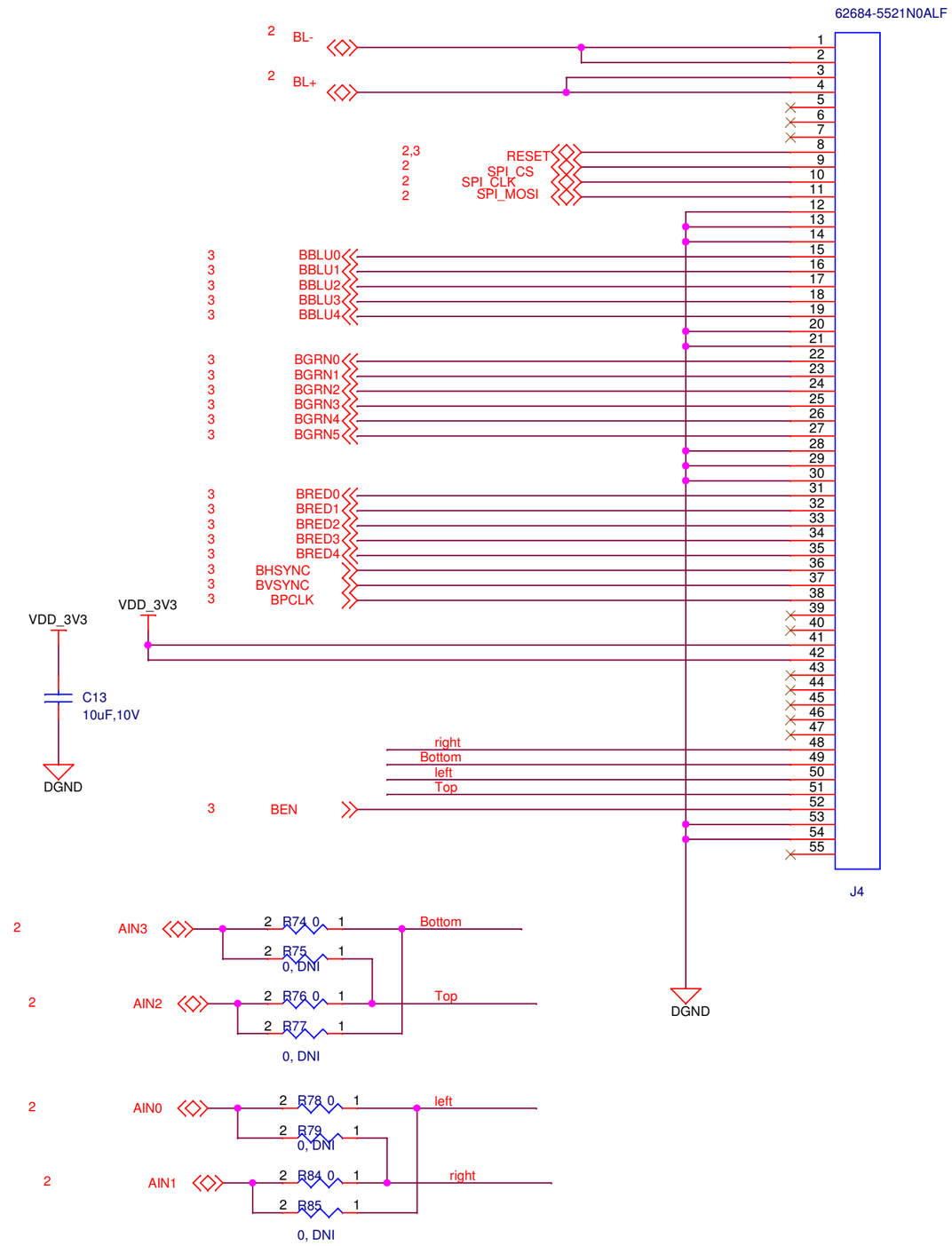

This work is licensed under the Creative Commons Attribution-Share Alike 3.0 Unported License. All derivative works are to be attributed to CircuitCo LLC.

beagleboardtoys is owned by CircuitCo LLC.

beagleboardtoys.com
1380 Presidential Dr.
#100
Richardson, TX 75081
www.beagleboardtoys.com

Title: BeagleBone LCD3 Cape LCD&TOUCH INTERFACE

Size	Document Number	Rev
B	BB-BONE-LCD3-01	A

Date: Saturday, March 10, 2012 Sheet 4 of 4