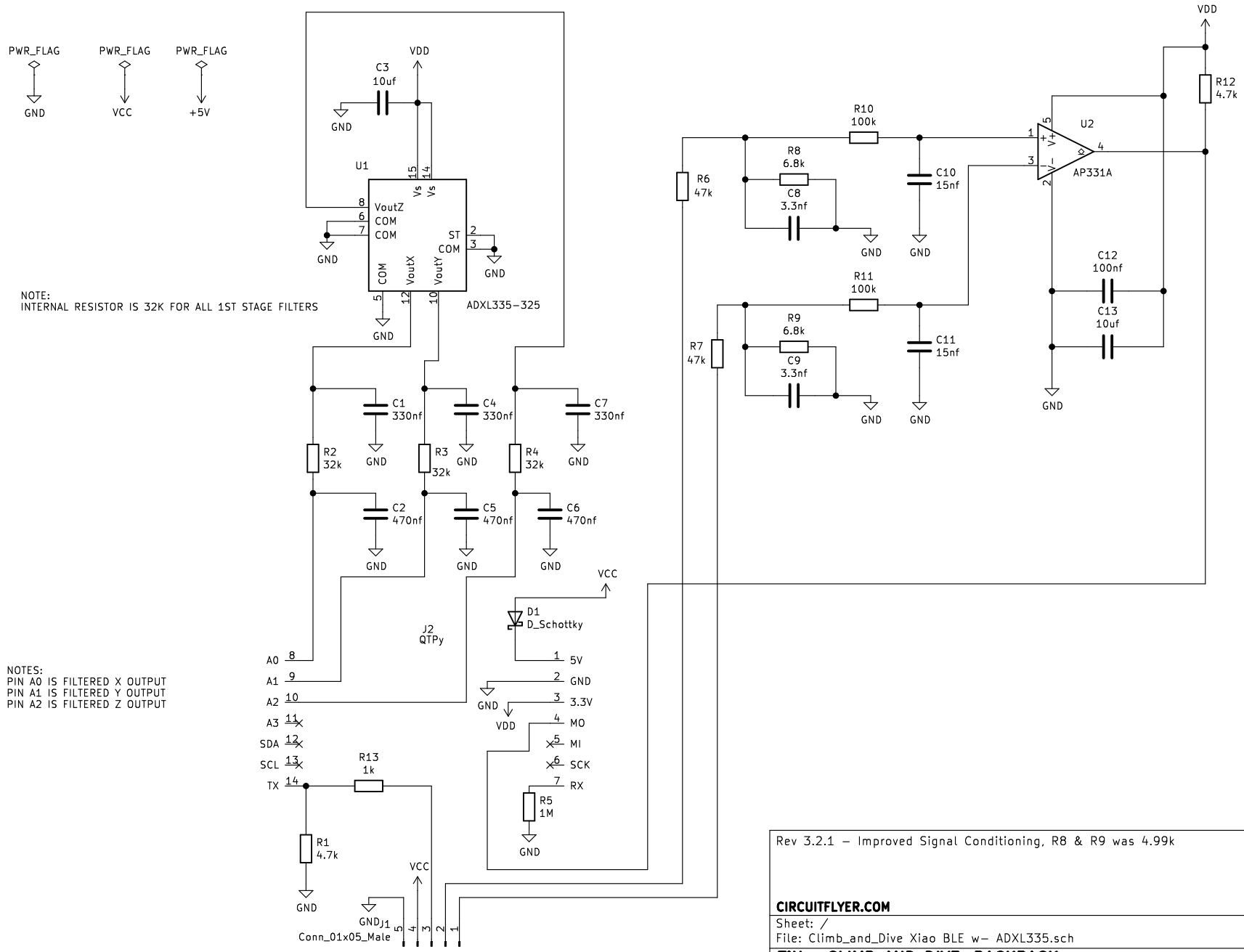

Rev 3.2.1 – Improved Signal Conditioning, R8 & R9 was 4.99k

CIRCUITFLYER.COM

Sheet: /

File: Climb_and_Dive Xiao BLE w- ADXL335.sch

Title: CLIMB_AND_DIVE, BACKPACK

Size: A	Date: 2023-04-09	**Rev: V3.2.1**
KiCad E.D.A. kicad (5.1.9-0-10_14)		Id: 1/1