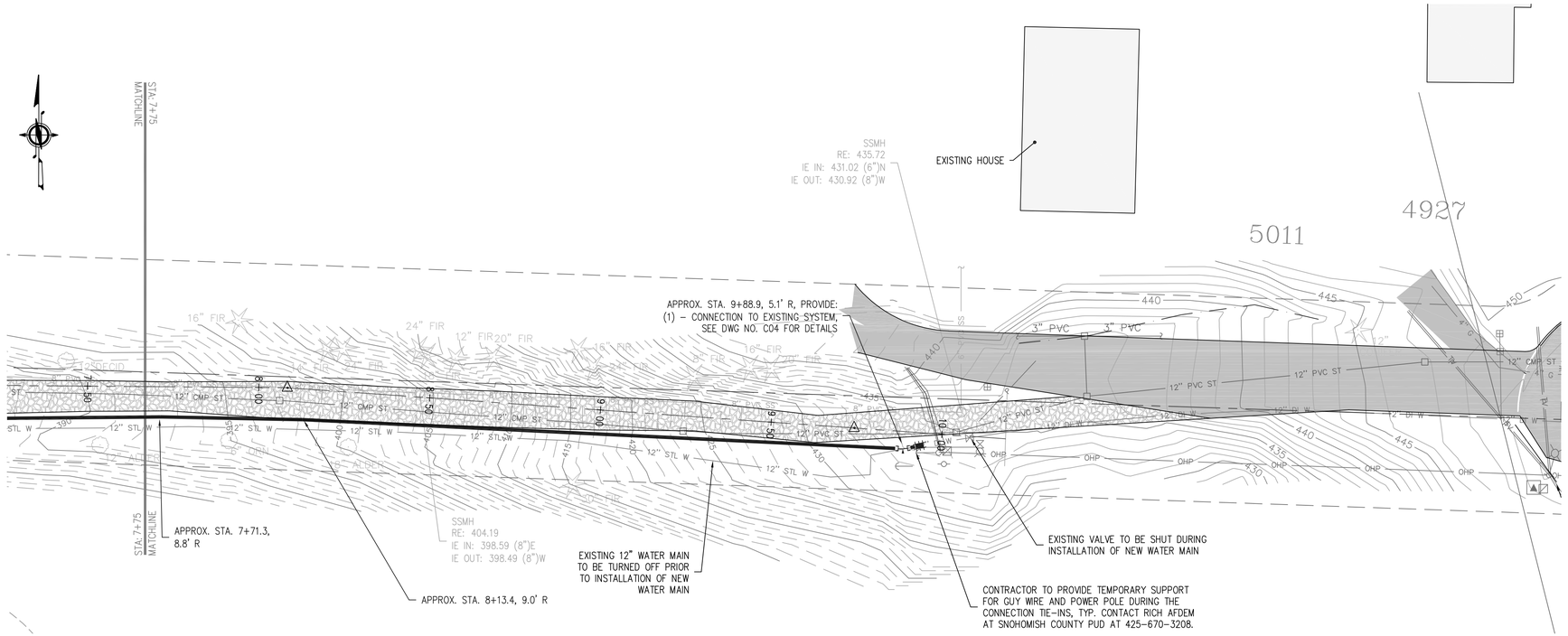

WATER MAIN AND STORM PLAN

1" = 20'

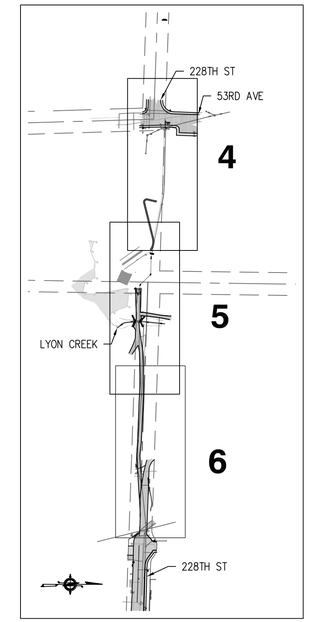

LOCATION LEGEND

1" = 200'

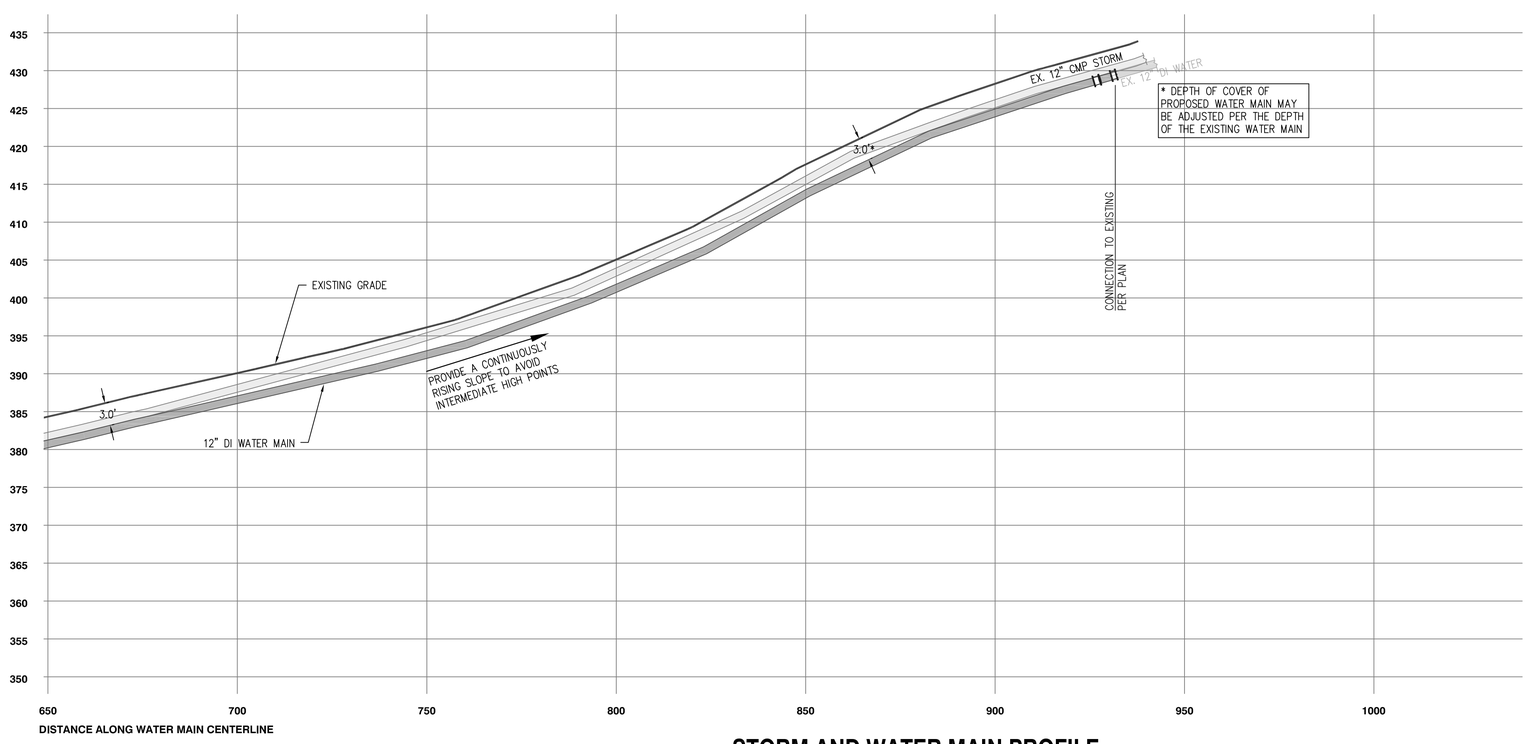

STORM AND WATER MAIN PROFILE

HORIZ: 1" = 20' VERT: 1" = 10'

RICHARD H. HARDEN
STATE OF WASHINGTON
16727
REGISTERED PROFESSIONAL ENGINEER
EXPIRES 8/2/08
SIGNED: 06/18/08

EDWIN HALLER
STATE OF WASHINGTON
38889
REGISTERED PROFESSIONAL ENGINEER
EXPIRES 2/17/2009
SIGNED: 06/18/08

MOUNTLAKE TERRACE

TERRACE CREEK WATER AND STORM SYSTEM IMPROVEMENTS

WATER MAIN AND STORM PLAN AND PROFILE

RH2 ENGINEERS PLANNERS SCIENTISTS

RH2 ENGINEERING, INC.
http://www.rh2.com
mailbox@rh2.com
1.800.720.8052

BELLINGHAM OFFICE
360.676.0836
454 West Horton Road

BOTHELL OFFICE
425.951.5400
12100 NE 195th Street, Suite 100

EAST WENATCHEE OFFICE
509.886.2900
300 Simon Street, Suite 5

PORT ORCHARD OFFICE
360.876.7960
600 Kitsap Street, Suite 101

SCALE: SHOWN
0 1" 2"
DRAWING IS NOT TO SCALE
IF BAR IS NOT 2" LONG

PLOT: 20	DWG NO. C03
ENGINEER: RJF	
REVIEWED: EH	
DATE: APR 14, 2006	SHEET NO. 6 / 9
CLIENT: MOU	
JOB NO.: 105-028	
FILENAME: TCI-D-D01	