The City of Mountlake Terrace

APPLICATION for SIDE SEWER PERMIT

OUTSIDE ☐ INSIDE ☐ REPAIRS ☐

CARD No.

EASEMENT No.

OWNER NORD HOMES, INC CONTRACTOR JAKE ZIER PERMIT No. 3850

HOUSE No. 21901 49th AVE. W. STREET AVENUE LOT No. 14 BLOCK No.

NAME ADD. FOREST WOOD

per TV
195 ft W of MH 2-51A

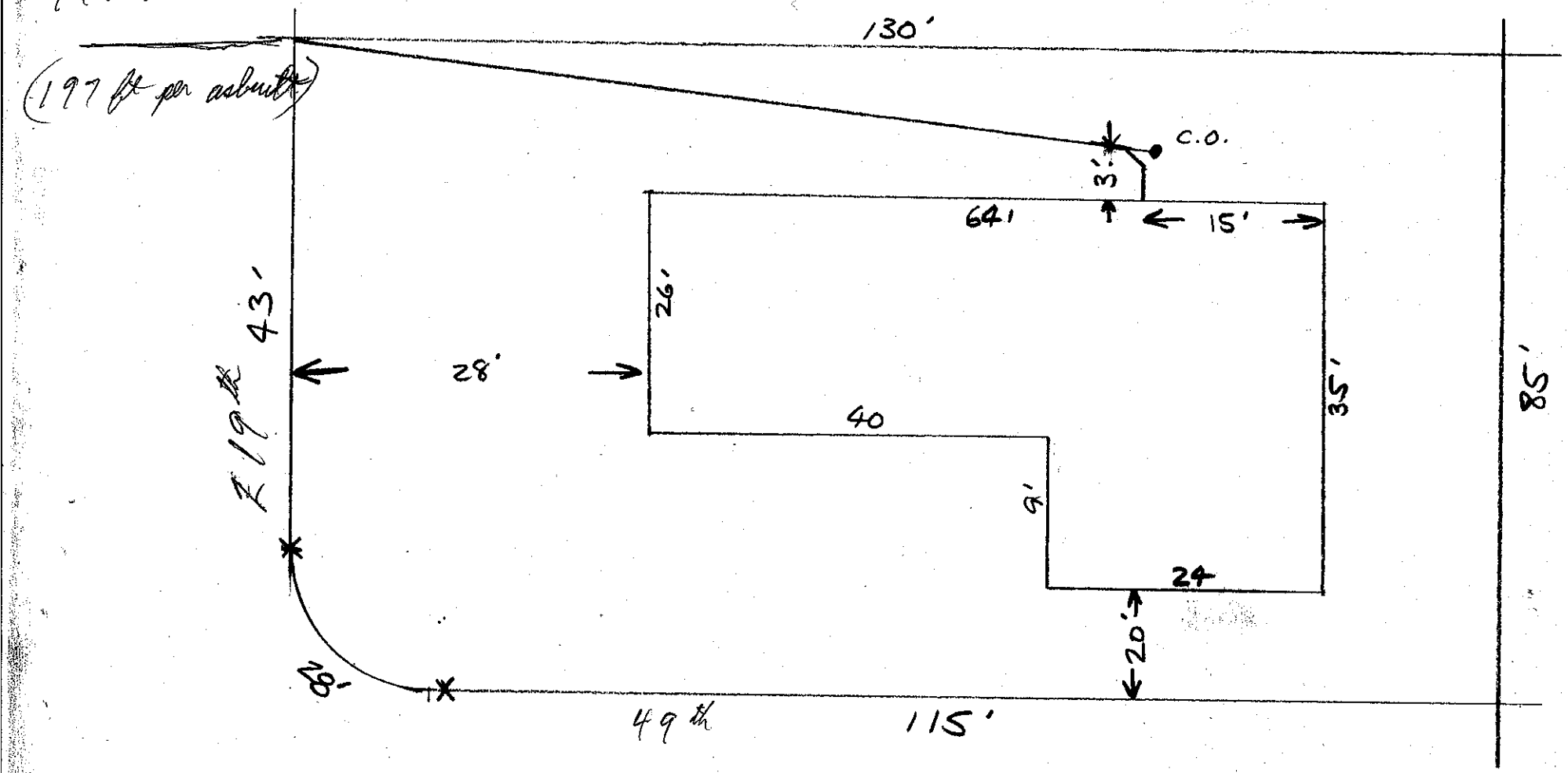

Date

BACKFILL WORK ORDER ISSUED DEPOSIT, $

SEWER WORK ORDER ISSUED

Approved:

DATE 8-11-69 BY R Baker