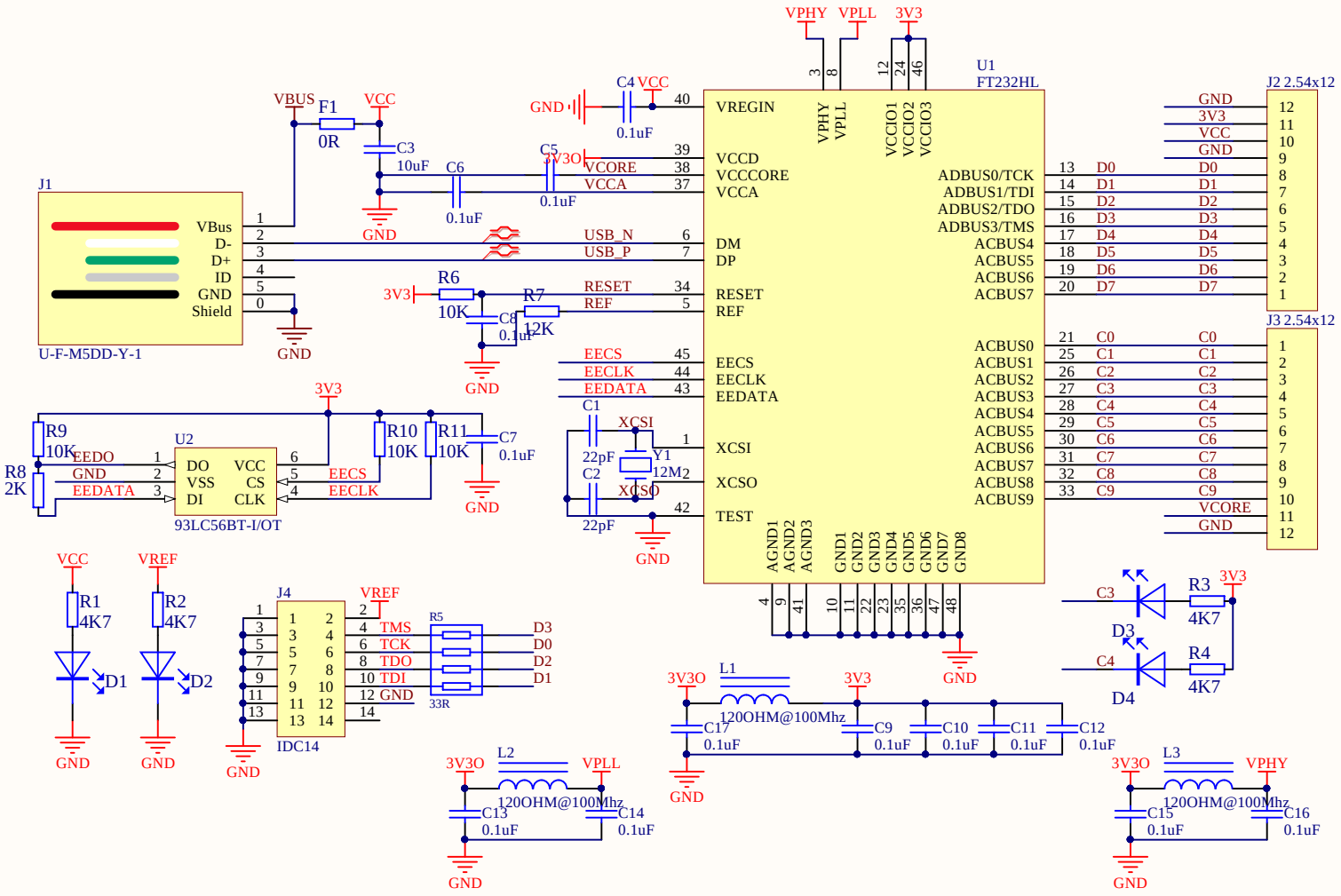
U1
FT232HL
J1
U-F-M5DD-Y-1
VBus
D-
D+
ID
GND
Shield
J2 2.54x12
J3 2.54x12
U2
93LC56BT-I/OT
DO
VSS
DI
VCC
CS
CLK
J4
IDC14
R5
33R
VREGIN
VCCD
VCCCORE
VCCA
DM
DP
RESET
REF
EECS
EECLK
EEDATA
XCSI
XCSO
TEST
ADBUS0/TCK
ADBUS1/TDI
ADBUS2/TDO
ADBUS3/TMS
ACBUS4
ACBUS5
ACBUS6
ACBUS7
ACBUS0
ACBUS1
ACBUS2
ACBUS3
ACBUS4
ACBUS5
ACBUS6
ACBUS7
ACBUS8
ACBUS9
VPHY
VPLL
VCCIO1
VCCIO2
VCCIO3
AGND1
AGND2
AGND3
GND1
GND2
GND3
GND4
GND5
GND6
GND7
GND8
VCORE
USB_N
USB_P
F1
0R
R1
4K7
R2
4K7
R3
4K7
R4
4K7
R6
10K
R7
12K
R8
2K
R9
10K
R10
10K
R11
10K
Y1
12M
L1
L2
L3
120OHM@100Mhz
D1
D2
D3
D4
TMS
TCK
TDO
TDI
GND
3V3
3V3O
VCC
VREF
VBUS
Title
Size
A4
Number
Revision
Date:
2020/5/31
Sheet of
File:
E:\echo\..\FT232HL.SchDoc
Drawn By:

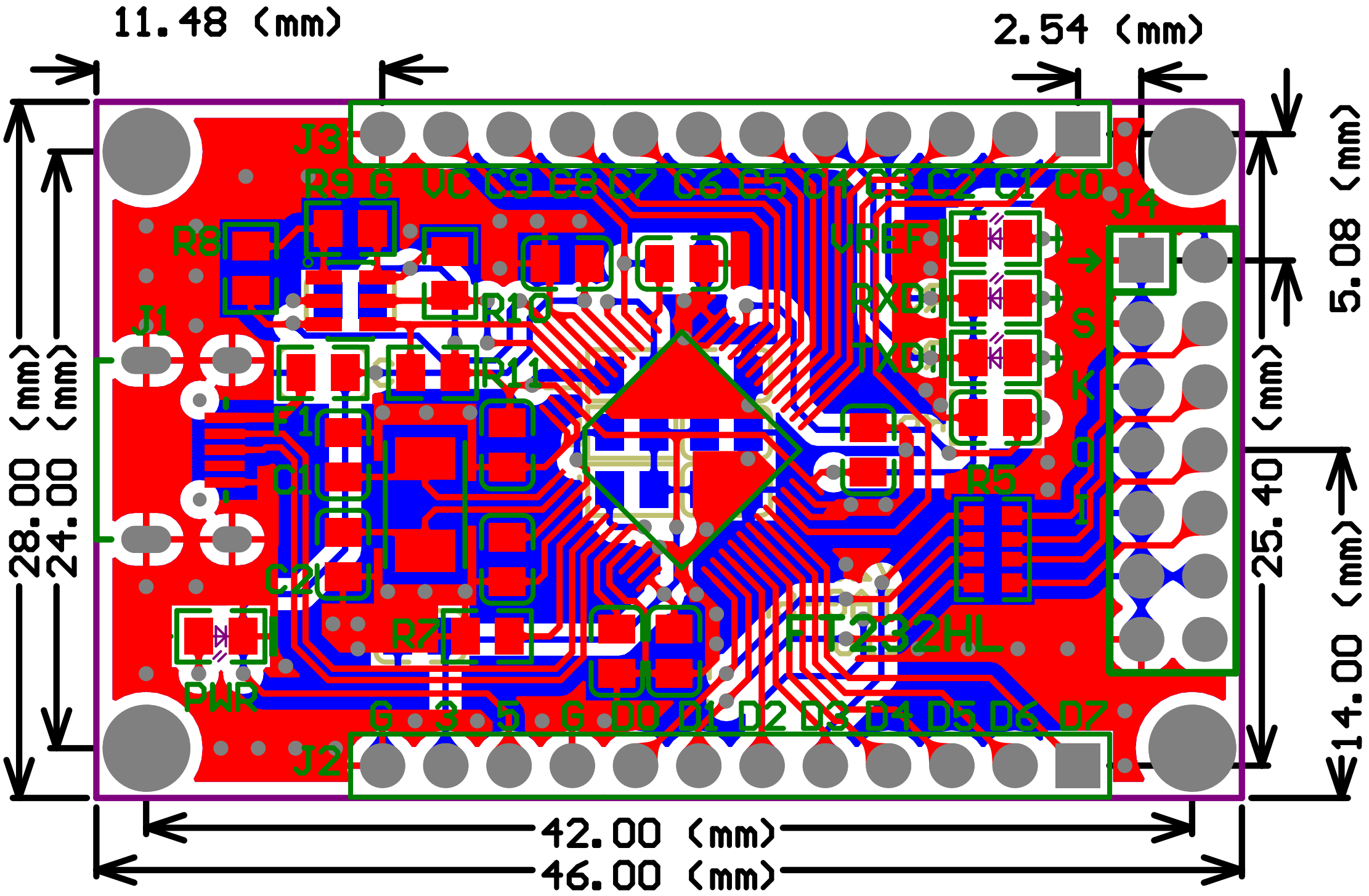
11.48 (mm)
2.54 (mm)
5.08 (mm)
28.00 (mm)
24.00 (mm)
25.40 (mm)
14.00 (mm)
42.00 (mm)
46.00 (mm)
J3
R9 G VC C9 C8 C7 C6 C5 C4 C3 C2 C1 C0
J4
R8
VREF
RXD
TXD
S
K
O
I
R10
J1
R11
F1
C1
C2
R5
R7
FT232HL
PWR
G 3 5 G D0 D1 D2 D3 D4 D5 D6 D7
J2